FM IF AMPLIFIER AND DEMODULATOR FOR TV SOUND APPLICATION

Technology: Bipolar

Features:

- o Outstanding limiting qualities
- o Very few external components
- o Wide supply voltage range
- o High ripple rejection
- o Minimum IF passage to audio output
- o High IF residual carrier rejection
- o U 828 B with integrated deemphasis resistor

Case:
8 pin dual inline plastic

Absolute maximum ratings

Reference point pin 3

Supply voltage	Pin 7	V_S	18	V
Power dissipation T_{amb} = 70 °C		P_{tot}	550	mW
Junction temperature		T_j	125	°C
Ambient temperature range		T_{amb}	- 15 ... + 70	°C
Storage temperature range		T_{stg}	- 25 ... + 125	°C

Maximum thermal resistance

Junction ambient	R_{thJA}	100	K/W

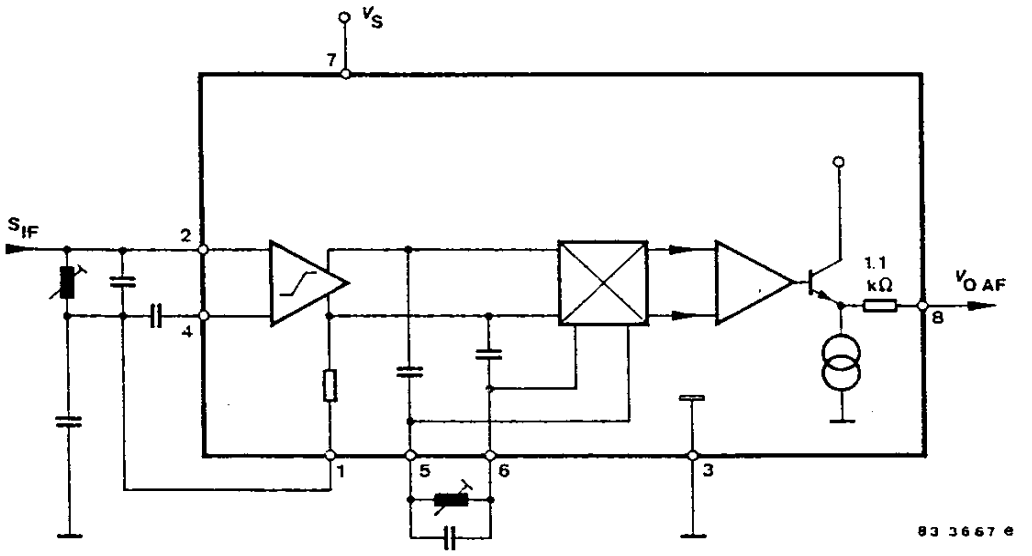

Fig. 1 Block diagram U 828 B

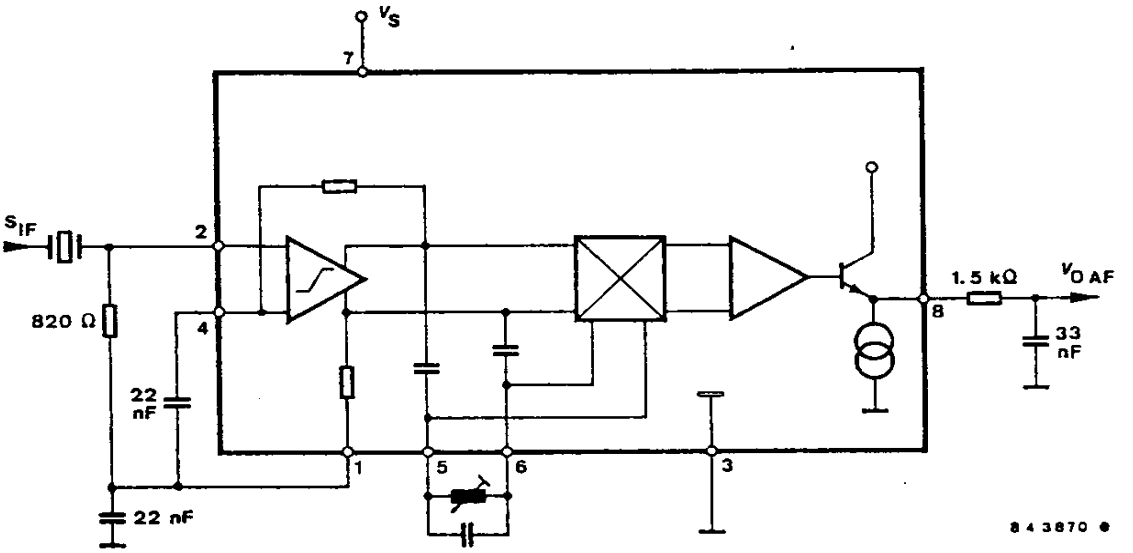

FIg. 2 Block diagram U 829 B

Electrical characteristics

V_S = 12 V, reference point pin 3,
T_{amb} = 25 °C, unless otherwise specified

				Min.	Typ.	Max.	
Supply voltage range	Pin 7		V_S	10		18	V
Supply current	Pin 7		I_S	9.5	14	17.5	mA
Frequency range			f			12	MHz
Input voltage for limitation f = 5.5 MHz, Δf = ± 50 kHz,							
f_{mod} = 1 kHz, Q[1]) = 45	Pin 2		v_i		75	90	µV
Input impedance	Pin 2		R_i	15	40		kΩ
			C_i		4.5	6	pF
Output impedance			R_o			200	Ω
AM-rejection f = 5.5 MHz, Δf = ± 50 kHz,							
m = 30 %, Q[1]) = 45, V_i = 500 µV			k_{AM}	50	60		dB
DC voltage at AF output V_i = 0	Pin 8	U 828 B	V_0		5.6		V
		U 829 B	V_0		4.0		V
Ripple rejection	Pin 7,8		k_{hum}		35		dB
IF residual voltage without C_D	Pin 8		V_{oIF}		20		mV
AF output voltage V_i= 10 mV, f= 5.5 MHz, Δf ± 50 kHz,							
f_{mod}= 1 kHz, Q[1])= 45	Pin 8	U 828 B	V_{oAF}	0.8		1.3	V
Group 0		= U 829 B	V_{oAF}	1.0		1.90	V
Group 1		= U 829 BS	V_{oAF}	1.0		1.25	V
Group 2		= U 829 BS	V_{oAF}	1.22		1.55	V
Group 3		= U 829 BS	V_{oAF}	1.52		1.90	V
Q[1]) = 20		U 828 B	V_{oAF}		0.65		V
		U 829 B	V_{oAF}		0.8		V

1) Operation quality factor for the democulator circuit

			Min.	Typ.	Max.	
Distortion	Pin 8					
f = 5.5 MHz, V_i = 10 mV, FM-Hub = 50 kHz, f_{mod} = 1 kHz						
Q^1) = 45		d		3.0		%
Q^1) = 20		d		1.0		%
Signal to noise ratio V_i = 10 mV, (unmodulated) according to DIN 45 405 (A-weighted)	Pin 8		70	80		dB
Mute function						
Switching current		I_{sw}			400	µA
Switching voltage		V_{mute}	3			V

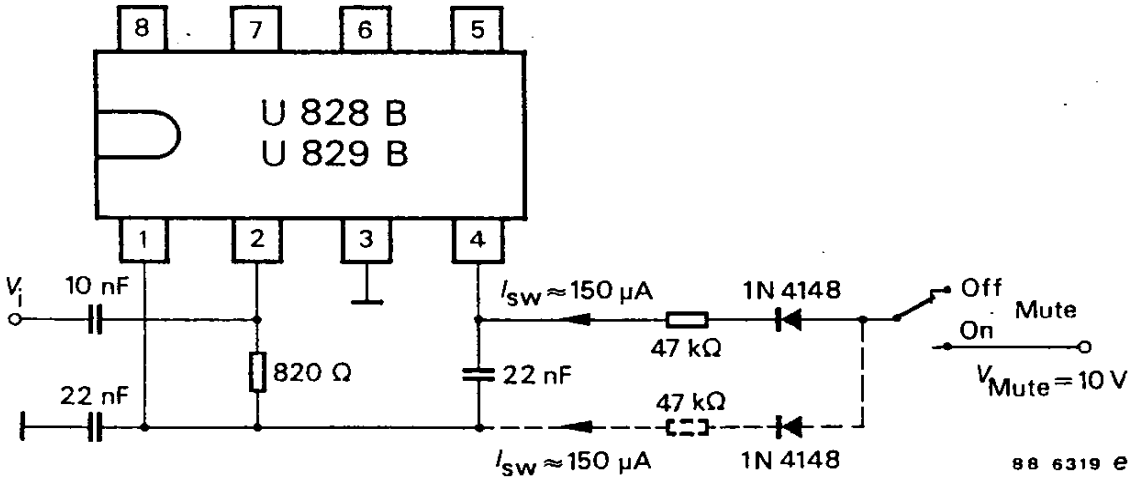

Fig. 3

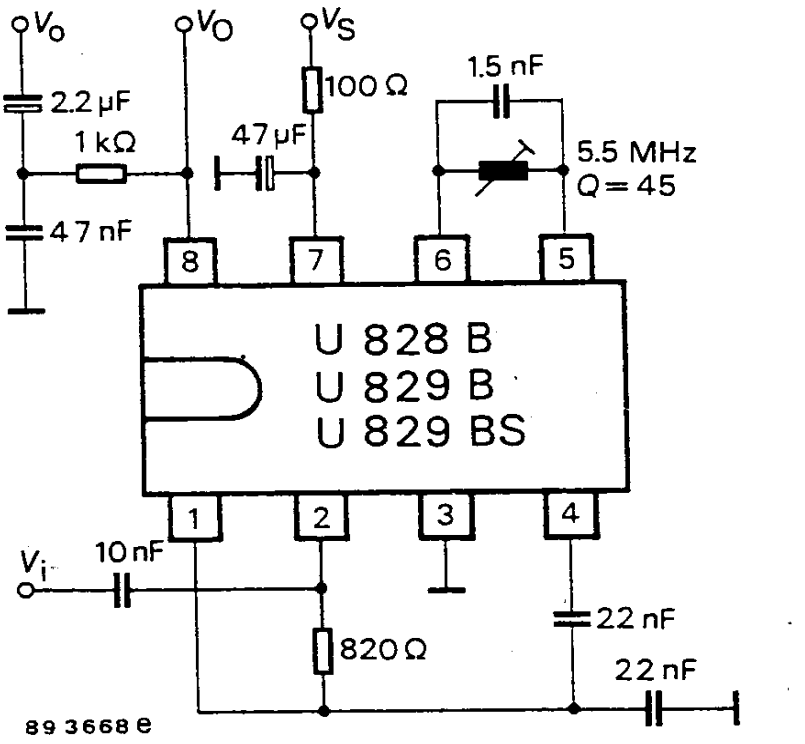

Fig. 4 Test circuit

Supply voltage **must be disconnected** before inserting the integrated circuit in the socket

Dimensions in mm

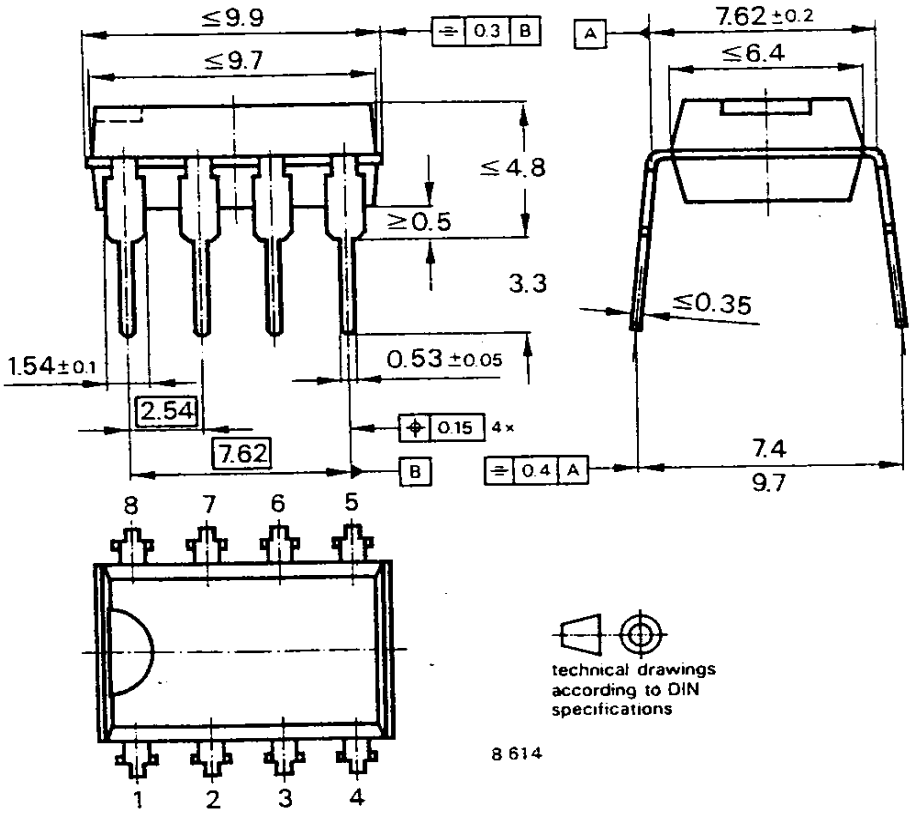

Case
DIP 8-leads