TMS4416, SMJ4416
16,384-WORD BY 4-BIT DYNAMIC RAM

AUGUST 1980 – REVISED JANUARY 1984

- **16,384 X 4 Organization**
- **Single +5-V Supply (10% Tolerance)**
- **Performance Ranges:**

	ACCESS TIME ROW ADDRESS (MAX)	ACCESS TIME COLUMN ADDRESS (MAX)	READ OR WRITE CYCLE (MIN)	READ-MODIFY-WRITE CYCLE (MIN)
'4416-12	120 ns	70 ns	230 ns	320 ns
'4416-15	150 ns	80 ns	260 ns	330 ns
'4416-20	200 ns	120 ns	330 ns	440 ns

- **Available Temperature Ranges*:**
  - **S . . . −55°C to 100°C**
  - **E . . . −40°C to 85°C**
  - **L . . . 0°C to 70°C**
- **Long Refresh Period . . . 4 milliseconds**
- **Low Refresh Overhead Time . . . As Low As 1.7% of Total Refresh Period**
- **All Inputs, Outputs, Clocks Fully TTL Compatible**
- **3-State Unlatched Outputs**
- **Early Write or $\overline{G}$ to Control Output Buffer Impedance**
- **Page-Mode Operation for Faster Access**
- **Low Power Dissipation**
  - **Operating . . . 200 mW (TYP)**
  - **Standby . . . 17.5 mW (TYP)**
- **New SMOS (Scaled-MOS) N-Channel Technology**

TMS4416 . . . NL PACKAGE
SMJ4416 . . . JD PACKAGE
(TOP VIEW)

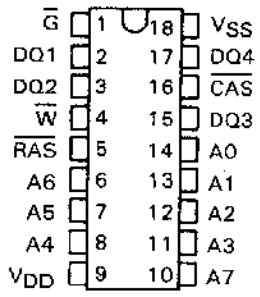

TMS4416 . . . FPL PACKAGE
(TOP VIEW)

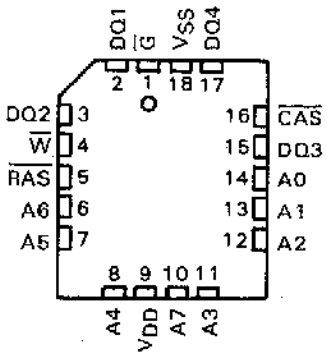

SMJ4416 . . . FG PACKAGE
(TOP VIEW)

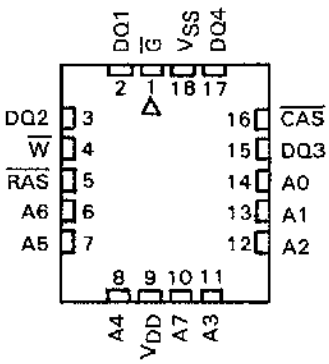

PIN NOMENCLATURE	
A0-A7	Address Inputs
$\overline{CAS}$	Column Address Strobe
DQ1-DQ4	Data In/Data Out
$\overline{G}$	Output Enable
$\overline{RAS}$	Row Address Strobe
V_{DD}	+5-V Supply
V_{SS}	Ground
$\overline{W}$	Write Enable

description

The '4416 is a high-speed, 65,536-bit, dynamic, random-access memory, organized as 16,384 words of 4 bits each. It employs state-of-the-art SMOS (scaled MOS) N-channel double-level polysilicon gate technology for very high performance combined with low cost and improved reliability.

The '4416 features $\overline{RAS}$ access times to 120 ns maximum. Power dissipation is 200 mW typical operating, 17.5 mW typical standby.

New SMOS technology permits operation from a single +5-V supply, reducing system power supply and decoupling requirements, and easing board layout. I_{DD} peaks have been reduced to 60 mA typical, and a −1-V input voltage undershoot can be tolerated, minimizing system noise considerations. Input clamp diodes are used to ease system design.

Refresh period is extended to 4 milliseconds, and during this period each of the 256 rows must be strobed with $\overline{RAS}$ in order to retain data. $\overline{CAS}$ can remain high during the refresh sequence to conserve power.

All inputs and outputs, including clocks, are compatible with Series 54/74 TTL. All address lines and data-in are latched on chip to simplify system design. Data-out is unlatched to allow greater system flexibility.

* M temperature range (−55°C to 125°C) to be available in future.

TEXAS INSTRUMENTS
POST OFFICE BOX 225012 • DALLAS, TEXAS 75265

The TMS4416 is offered in 18-pin plastic dual-in line and 18-pin plastic chip carrier packages. It is guaranteed for operation from 0 °C to 70 °C. The SMJ4416 is offered in 18-pin ceramic side-braze dual-in-line and 18-pin ceramic chip carrier packages. It is available in −55 °C to 100 °C and −40 °C to 85 °C temperature ranges. Dual-in-line packages are designed for insertion in mounting-hole rows on 300-mil (7,62 mm) centers.

operation

address (A0 through A7)

Fourteen address bits are required to decode 1 of 16,384 storage locations. Eight row-address bits are set up on pins A0 through A7 and latched onto the chip by the row-address strobe ($\overline{RAS}$). Then the six column-address bits are set up on pins A1 through A6 and latched onto the chip by the column-address strobe ($\overline{CAS}$). All addresses must be stable on or before the falling edges of $\overline{RAS}$ and $\overline{CAS}$. $\overline{RAS}$ is similar to a chip enable in that it activates the sense amplifiers as well as the row decoder. $\overline{CAS}$ is used as a chip select activating the column decoder and the input and output buffers.

write enable ($\overline{W}$)

The read or write mode is selected through the write enable ($\overline{W}$) input. A logic high on the $\overline{W}$ input selects the read mode and a logic low selects the write mode. The write enable terminal can be driven from standard TTL circuits without a pull-up resistor. The data input is disabled when the read mode is selected. When $\overline{W}$ goes low prior to $\overline{CAS}$, data-out will remain in the high-impedance state allowing a write cycle with $\overline{G}$ grounded.

data-in (DQ1 through DQ4)

Data is written during a write or read-modify write cycle. Depending on the mode of operation, the falling edge of $\overline{CAS}$ or $\overline{W}$ strobes data into the on-chip data latches. These latches can be driven from standard TTL circuits without a pull-up resistor. In an early-write cycle, $\overline{W}$ is brought low prior to $\overline{CAS}$ and the data is strobed in by $\overline{CAS}$ with setup and hold times referrenced to this signal. In a delayed write or read-modify-write cycle, $\overline{CAS}$ will already be low, thus the data will be strobed in by $\overline{W}$ with setup and hold times referenced to this signal. In delayed or read-modify-write, $\overline{G}$ must be high to bring the output buffers to high impedance prior to impressing data on the I/O lines.

data-out (DQ1 through DQ4)

The three-state output buffer provides direct TTL compatibility (no pull-up resistor required) with a fan-out of two Series 54/74 TTL loads. Data-out is the same polarity as data-in. The output is in the high-impedance (floating) state until $\overline{CAS}$ is brought low. In a read cycle the output goes active after the access time interval $t_{a(C)}$ that begins with the negative transition of $\overline{CAS}$ as long as $t_{a(R)}$ and $t_{a(E)}$ are satisified. The output becomes valid after the access time has elapsed and remains valid while $\overline{CAS}$ and $\overline{G}$ are low. $\overline{CAS}$ or $\overline{G}$ going high returns it to a high impedance state. In an early-write cycle, the output is always in the high impedance state. In a delayed-write or read-modify-write cycle, the output must be put in the high impedance state prior to applying data to the DQ input. This is accomplished by bringing $\overline{G}$ high prior to applying data, thus satisfying t_{GHD}.

output enable ($\overline{G}$)

The $\overline{G}$ controls the impedance of the output buffers. When $\overline{G}$ is high, the buffers will remain in the high impedance state. Bringing $\overline{G}$ low during a normal cycle will activate the output buffers putting them in the low impedance state. It is necessary for both $\overline{RAS}$ and $\overline{CAS}$ to be brought low for the output buffers to go into the low impedance state. Once in the low impedance state, they will reamin in the low impedance state until $\overline{G}$ or $\overline{CAS}$ is brought high.

refresh

A refresh operation must be performed at least every four milliseconds to retain data. Since the output buffer is in the high-impedance state unless $\overline{CAS}$ is applied, the $\overline{RAS}$-only refresh sequence avoids any output during refresh. Strobing each of the 256 row addresses (A0 through A7) with $\overline{RAS}$ causes all bits in each row to be refreshed. $\overline{CAS}$ can remain high (inactive) for this refresh sequence to conserve power.

TEXAS INSTRUMENTS
POST OFFICE BOX 225012 • DALLAS, TEXAS 75265

page mode

Page mode operation allows effectively faster memory access by keeping the same row address and strobing successive column addresses onto the chip. Thus, the time required to setup and strobe sequential row addresses for the same page is eliminated. To extend beyond the 64 column locations on a single RAM, the row address and $\overline{RAS}$ are applied to multiple 16K × 4 RAMs. $\overline{CAS}$ is then decoded to select the proper RAM.

power-up

After power-up, the power supply must remain at its steady-state value for 1 ms. In addition, the $\overline{RAS}$ input must remain high for 100 μs immediately prior to initialization. Initialization consists of performing eight $\overline{RAS}$ cycles before proper device operation is achieved.

logic symbol†

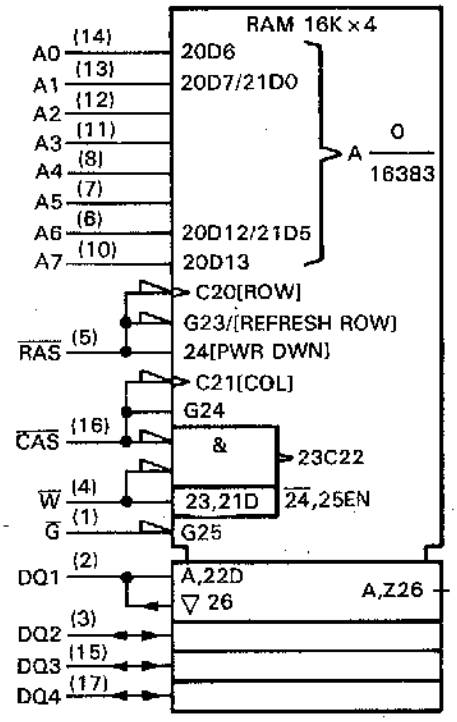

†This symbol is in accordance with IEEE Std 91/ANSI Y32.14 and recent decisions by IEEE and IEC. See explanation on page 10-1.

functional block diagram

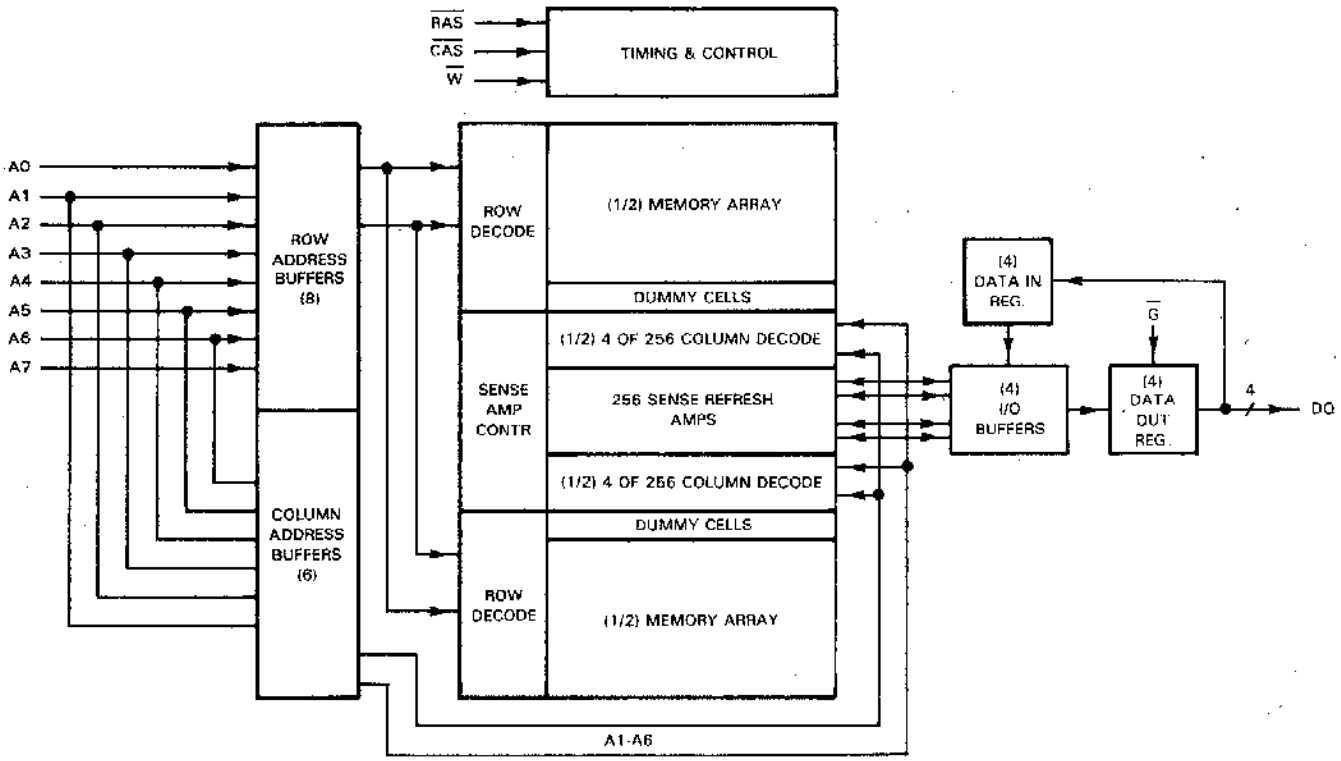

absolute maximum ratings over operating free-air temperature range (unless otherwise noted)†

Voltage on any pin except V_{DD} and data out (see Note 1)	−1.5 V to 10 V
Voltage on V_{DD} supply and data out with respect to V_{SS}	−1 V to 6 V
Short circuit output current	50 mA
Power dissipation	1 W
Operating free-air temperature range: TMS′	0°C to 70°C
Operating case temperature range: SMJ′ − S version	−55°C to 100°C
− E version	−40°C to 85°C
Storage temperature range	−65°C to 150°C

† Stresses beyond those listed under "Absolute Maximum Ratings" may cause permanent damage to the device. This is a stress rating only and functional operation of the device at these or any other conditions beyond those indicated in the "Recommended Operating Conditions" section of this specification is not implied. Exposure to absolute-maximum-rated conditions for extended periods may affect device reliability.

NOTE 1: All voltage values in this data sheet are with respect to V_{SS}.

recommended operating conditions

PARAMETER		TMS4416 MIN	TMS4416 NOM	TMS4416 MAX	UNIT
Supply voltage, V_{DD}		4.5	5	5.5	V
Supply voltage, V_{SS}			0		V
High-level input voltage, V_{IH}	V_{DD} = 4.5 V	2.4		4.8	V
	V_{DD} = 5.5 V	2.4		5.8	
Low-level input voltage, V_{IL} (see Note 2)		V_{IK}		0.8	V
Operating free-air temperature, T_A		0		70	°C

NOTE 2: The algebraic convention, where the more negative (less positive) limit is designated as minimum, is used in this data sheet for logic voltage levels only.

electrical characteristics over full ranges of recommended operating conditions (unless otherwise noted)

PARAMETER		TEST CONDITIONS	TMS4416-12 MIN	TMS4416-12 TYP†	TMS4416-12 MAX	UNIT
V_{IK}	Input clamp voltage	I_I = −15 mA, see Figure 1			−1.2	V
V_{OH}	High-level output voltage	I_{OH} = −2 mA	2.4			V
V_{OL}	Low-level output voltage	I_{OL} = 4.2 mA			0.4	V
I_I	Input current (leakage)	V_I = 0 V to 5.8 V, V_{DD} = 5 V, All other pins = 0 V			±10	μA
I_O	Output current (leakage)	V_O = 0.4 V to 5.5 V, V_{DD} = 5 V, $\overline{CAS}$ high			±10	μA
I_{DD1}	Average operating current during read or write cycle	At t_c = minimum cycle			54	mA
I_{DD2}‡	Standby current	After 1 memory cycle, $\overline{RAS}$ and $\overline{CAS}$ high		3.5	5	mA
I_{DD3}	Average refresh current	t_c = minimum cycle, $\overline{RAS}$ cycling, $\overline{CAS}$ high			46	mA
I_{DD4}	Average page-mode current	$t_{c(P)}$ = minimum cycle, $\overline{RAS}$ low, $\overline{CAS}$ cycling			46	mA

†All typical values are at T_A = 25°C and nominal supply voltages.
‡$V_{IL} \geq -0.6$ V on all inputs.

electrical characteristics over full ranges of recommended operating conditions (unless otherwise noted)

PARAMETER		TEST CONDITIONS	TMS4416-15			TMS4416-20			UNIT
			MIN	TYP†	MAX	MIN	TYP†	MAX	
V_{IK}	Input clamp voltage	$I_I = -15$ mA, see Figure 1			−1.2			−1.2	V
V_{OH}	High-level output voltage	$I_{OH} = -2$ mA	2.4			2.4			V
V_{OL}	Low-level output voltage	$I_{OL} = 4.2$ mA			0.4			0.4	V
I_I	Input current (leakage)	$V_I = 0$ V to 5.8 V, $V_{DD} = 5$ V, All other pins = 0 V			±10			±10	μA
I_O	Output current (leakage)	$V_O = 0.4$ V to 5.5 V, $V_{DD} = 5$ V, $\overline{CAS}$ high			±10			±10	μA
I_{DD1}	Average operating current during read or write cycle	At t_c = minimum cycle		40	48		35	42	mA
I_{DD2}‡	Standby current	After 1 memory cycle, $\overline{RAS}$ and $\overline{CAS}$ high		3.5	5		3.5	5	mA
I_{DD3}	Average refresh current	t_c = minimum cycle, $\overline{RAS}$ cycling, $\overline{CAS}$ high		25	40		21	34	mA
I_{DD4}	Average page-mode current	$t_{c(P)}$ = minimum cycle, $\overline{RAS}$ low, $\overline{CAS}$ cycling		25	40		21	34	mA

†All typical values are at T_A = 25°C and nominal supply voltages.
‡$V_{IL} \geq -0.6$ V on all inputs.

capacitance over recommended supply voltage range and operating free-air temperature range, f = 1 MHz

PARAMETER		TMS4416		UNIT
		TYP†	MAX	
$C_{i(A)}$	Input capacitance, address inputs	5	7	pF
$C_{i(RC)}$	Input capacitance, strobe inputs	8	10	pF
$C_{i(W)}$	Input capacitance, write enable input	8	10	pF
$C_{i/o}$	Input/output capacitance, data ports	8	10	pF

†All typical values are at T_A = 25°C and nominal supply voltages.

switching characteristics over recommended supply voltage range and operating free-air temperature range

PARAMETER		TEST CONDITIONS	ALT. SYMBOL	TMS4416-12 MIN	TMS4416-12 MAX	UNIT
$t_{a(C)}$	Access time from $\overline{CAS}$	C_L = 100 pF, Load = 2 Series 74 TTL gates	t_{CAC}		70	ns
$t_{a(R)}$	Access time from $\overline{RAS}$	t_{RLCL} = MAX, C_L = 100 pF Load = 2 Series 74 TTL gates	t_{RAC}		120	ns
$t_{a(G)}$	Access time after $\overline{G}$ low	C_L = 100 pF, Load = 2 Series 74 TTL gates			30	ns
$t_{dis(CH)}$	Output disable time after $\overline{CAS}$ high	C_L = 100 pF, Load = 2 Series 74 TTL gates	t_{OFF}	0	30	ns
$t_{dis(G)}$	Output disable time after $\overline{G}$ high	C_L = 100 pF, Load = 2 Series 74 TTL gates		0	30	ns

PARAMETER		TEST CONDITIONS	ALT. SYMBOL	TMS4416-15 MIN	TMS4416-15 MAX	TMS4416-20 MIN	TMS4416-20 MAX	UNIT
$t_{a(C)}$	Access time from $\overline{CAS}$	C_L = 100 pF, Load = 2 Series 74 TTL gates	t_{CAC}		80		120	ns
$t_{a(R)}$	Access time from $\overline{RAS}$	t_{RLCL} = MAX, C_L = 100 pF Load = 2 Series 74 TTL gates	t_{RAC}		150		200	ns
$t_{a(G)}$	Access time after $\overline{G}$ low	C_L = 100 pF, Load = 2 Series 74 TTL gates			40		50	ns
$t_{dis(CH)}$	Output disable time after $\overline{CAS}$ high	C_L = 100 pF, Load = 2 Series 74 TTL gates	t_{OFF}	0	30	0	40	ns
$t_{dis(G)}$	Output disable time after $\overline{G}$ high	C_L = 100 pF, Load = 2 Series 74 TTL gates		0	30	0	40	ns

timing requirements over recommended supply voltage range and operating free-air temperature range

PARAMETER		ALT. SYMBOL	TMS4416-12 MIN	TMS4416-12 MAX	UNIT
$t_{c(P)}$	Page mode cycle time	t_{PC}	120		ns
$t_{c(rd)}$	Read cycle time*	t_{RC}	230		ns
$t_{c(W)}$	Write cycle time	t_{WC}	230		ns
$t_{c(rdW)}$	Read-write/read-modify-write cycle time	t_{RWC}	320		ns
$t_{w(CH)}$	Pulse width, $\overline{CAS}$ high (precharge time)**	t_{CP}	40		ns
$t_{w(CL)}$	Pulse width, $\overline{CAS}$ low†	t_{CAS}	70	10,000	ns
$t_{w(RH)}$	Pulse width $\overline{RAS}$ high (precharge time)	t_{RP}	80		ns
$t_{w(RL)}$	Pulse width, $\overline{RAS}$ low‡	t_{RAS}	120	10,000	ns
$t_{w(W)}$	Write pulse width	t_{WP}	30		ns
t_t	Transition times (rise and fall) for $\overline{RAS}$ and $\overline{CAS}$	t_T	3	50	ns
$t_{su(CA)}$	Column address setup time	t_{ASC}	0		ns
$t_{su(RA)}$	Row address setup time	t_{ASR}	0		ns
$t_{su(D)}$	Data setup time	t_{DS}	0		ns
$t_{su(rd)}$	Read command setup time	t_{RCS}	0		ns
$t_{su(WCH)}$	Write command setup time before $\overline{CAS}$ high	t_{CWL}	50		ns
$t_{su(WRH)}$	Write command setup time before $\overline{RAS}$ high	t_{RWL}	50		ns
$t_{h(CLCA)}$	Column address hold time after $\overline{CAS}$ low	t_{CAH}	35		ns
$t_{h(RA)}$	Row address hold time	t_{RAH}	15		ns
$t_{h(RLCA)}$	Column address hold time after $\overline{RAS}$ low	t_{AR}	85		ns
$t_{h(CLD)}$	Data hold time after $\overline{CAS}$ low	t_{DH}	40		ns
$t_{h(RLD)}$	Data hold time after $\overline{RAS}$ low	t_{DHR}	100		ns
$t_{h(WLD)}$	Data hold time after $\overline{W}$ low	t_{DH}	30		ns
$t_{h(RHrd)}$	Read command hold time after $\overline{RAS}$ high	t_{RRH}	10		ns
$t_{h(CHrd)}$	Read command hold time after $\overline{CAS}$ high	t_{RCH}	0		ns
$t_{h(CLW)}$	Write command hold time after $\overline{CAS}$ low	t_{WCH}	40		ns
$t_{h(RLW)}$	Write command hold time after $\overline{RAS}$ low	t_{WCR}	100		ns
t_{RLCH}	Delay time, $\overline{RAS}$ low to $\overline{CAS}$ high	t_{CSH}	150		ns
t_{CHRL}	Delay time, $\overline{CAS}$ high to $\overline{RAS}$ low	t_{CRP}	0		ns
t_{CLRH}	Delay time, $\overline{CAS}$ low to $\overline{RAS}$ high	t_{RSH}	80		ns
t_{CLWL}	Delay time, $\overline{CAS}$ low to $\overline{W}$ low (read, modify-write-cycle only)***	t_{CWD}	120		ns
t_{RLCL}	Delay time, $\overline{RAS}$ low to $\overline{CAS}$ low (maximum value specified only to guarantee access time)	t_{RCD}	20	50	ns
t_{RLWL}	Delay time, $\overline{RAS}$ low to $\overline{W}$ low (read, modify-write-cycle only)***	t_{RWD}	170		ns
t_{WLCL}	Delay time, $\overline{W}$ low to $\overline{CAS}$ low (early write cycle)	t_{WCS}	−5		ns
t_{GHD}	Delay time, $\overline{G}$ high before data applied at DQ		30		ns
t_{rf}	Refresh time interval	t_{REF}		4	ms

* Note: All cycle times assume $t_t = 5$ ns.
** Page mode only.
***Necessary to insure $\overline{G}$ has disabled the output buffers prior to applying data to the device.
†In a read-modify-write cycle, t_{CLWL} and $t_{su(WCH)}$ must be observed. Depending on the user's transition times, this may require additional $\overline{CAS}$ low time $t_{w(CL)}$.
‡In a read-modify-write cycle, t_{RLWL} and $t_{su(WRH)}$ must be observed. Depending on the user's transition times, this may require additional $\overline{RAS}$ low time $t_{w(RL)}$.

timing requirements over recommended supply voltage range and operating free-air temperature range

PARAMETER		ALT. SYMBOL	TMS4416-15 MIN	TMS4416-15 MAX	TMS4416-20 MIN	TMS4416-20 MAX	UNIT
$t_{c(P)}$	Page mode cycle time	t_{PC}	140		210		ns
$t_{c(rd)}$	Read cycle time*	t_{RC}	260		330		ns
$t_{c(W)}$	Write cycle time	t_{WC}	260		330		ns
$t_{c(rdW)}$	Read-write/read-modify-write cycle time	t_{RWC}	360		440		ns
$t_{w(CH)}$	Pulse width, $\overline{CAS}$ high (precharge time)**	t_{CP}	50		80		ns
$t_{w(CL)}$	Pulse width, $\overline{CAS}$ low†	t_{CAS}	80	10,000	120	10,000	ns
$t_{w(RH)}$	Pulse width $\overline{RAS}$ high (precharge time)	t_{RP}	100		120		ns
$t_{w(RL)}$	Pulse width, $\overline{RAS}$ low‡	t_{RAS}	150	10,000	200	10,000	ns
$t_{w(W)}$	Write pulse width	t_{WP}	40		50		ns
t_t	Transition times (rise and fall) for $\overline{RAS}$ and $\overline{CAS}$	t_T	3	50	3	50	ns
$t_{su(CA)}$	Column address setup time	t_{ASC}	0		0		ns
$t_{su(RA)}$	Row address setup time	t_{ASR}	0		0		ns
$t_{su(D)}$	Data setup time	t_{DS}	0		0		ns
$t_{su(rd)}$	Read command setup time	t_{RCS}	0		0		ns
$t_{su(WCH)}$	Write command setup time before $\overline{CAS}$ high	t_{CWL}	60		80		ns
$t_{su(WRH)}$	Write command setup time before $\overline{RAS}$ high	t_{RWL}	60		80		ns
$t_{h(CLCA)}$	Column address hold time after $\overline{CAS}$ low	t_{CAH}	40		50		ns
$t_{h(RA)}$	Row address hold time	t_{RAH}	20		25		ns
$t_{h(RLCA)}$	Column address hold time after $\overline{RAS}$ low	t_{AR}	110		130		ns
$t_{h(CLD)}$	Data hold time after $\overline{CAS}$ low	t_{DH}	60		80		ns
$t_{h(RLD)}$	Data hold time after $\overline{RAS}$ low	t_{DHR}	130		160		ns
$t_{h(WLD)}$	Data hold time after $\overline{W}$ low	t_{DH}	40		50		ns
$t_{h(RHrd)}$	Read command hold time after $\overline{RAS}$ high	t_{RRH}	10		10		ns
$t_{h(CHrd)}$	Read command hold time after $\overline{CAS}$ high	t_{RCH}	0		0		ns
$t_{h(CLW)}$	Write command hold time after $\overline{CAS}$ low	t_{WCH}	60		80		ns
$t_{h(RLW)}$	Write command hold time after $\overline{RAS}$ low	t_{WCR}	130		160		ns
t_{RLCH}	Delay time, $\overline{RAS}$ low to $\overline{CAS}$ high	t_{CSH}	150		200		ns
t_{CHRL}	Delay time, $\overline{CAS}$ high to $\overline{RAS}$ low	t_{CRP}	0		0		ns
t_{CLRH}	Delay time, $\overline{CAS}$ low to $\overline{RAS}$ high	t_{RSH}	80		120		ns
t_{CLWL}	Delay time, $\overline{CAS}$ low to $\overline{W}$ low (read, modify-write-cycle only)***	t_{CWD}	120		150		ns
t_{RLCL}	Delay time, $\overline{RAS}$ low to $\overline{CAS}$ low (maximum value specified only to guarantee access time)	t_{RCD}	20	70	25	80	ns
t_{RLWL}	Delay time, $\overline{RAS}$ low to $\overline{W}$ low (read, modify-write-cycle only)***	t_{RWD}	190		230		ns
t_{WLCL}	Delay time, $\overline{W}$ low to $\overline{CAS}$ low (early write cycle)	t_{WCS}	5		−5		ns
t_{GHD}	Delay time, $\overline{G}$ high before data applied at DQ		30		40		ns
t_{rf}	Refresh time interval	t_{REF}		4		4	ms

* Note: All cycle times assume t_t = 5 ns.

** Page mode only.

*** Necessary to insure $\overline{G}$ has disabled the output buffers prior to applying data to the device.

† In a read-modify-write cycle, t_{CLWL} and $t_{su(WCH)}$ must be observed. Depending on the user's transition times, this may require additional $\overline{CAS}$ low time $t_{w(CL)}$.

‡ In a read-modify-write cycle, t_{RLWL} and $t_{su(WRH)}$ must be observed. Depending on the user's transition times, this may require additional $\overline{RAS}$ low time $t_{w(RL)}$.

recommended operating conditions

PARAMETER		SMJ4416 S VERSION MIN	NOM	MAX	SMJ4416 E VERSION MIN	NOM	MAX	UNIT
Supply voltage, V_{DD}		4.5	5	5.5	4.5	5	5.5	V
Supply voltage, V_{SS}			0			0		V
High-level input voltage, V_{IH}	V_{DD} = 4.5 V	2.4		4.8	2.4		4.8	V
	V_{DD} = 5.5 V	2.4		5.8	2.4		5.8	
Low-level input voltage, V_{IL} (see Note 2)		V_{IK}		0.8	V_{IK}		0.8	V
Operating case temperature, T_C		−55		100	−40		85	°C

NOTE 2: The algebraic convention, where the more negative (less positive) limit is designated as minimum, is used in this data sheet for logic voltage levels only.

electrical characteristics over full ranges of recommended operating conditions (unless otherwise noted)

PARAMETER		TEST CONDITIONS	SMJ4416-12 MIN	TYP†	MAX	UNIT
V_{IK}	Input clamp voltage	I_I = −15 mA, see Figure 1			−1.2	V
V_{OH}	High-level output voltage	I_{OH} = −2 mA	2.4			V
V_{OL}	Low-level output voltage	I_{OL} = 4.2 mA			0.4	V
I_I	Input current (leakage)	V_I = 0 V to 5.8 V, V_{DD} = 5 V, All other pins = 0 V			±10	μA
I_O	Output current (leakage)	V_O = 0.4 V to 5.5 V, V_{DD} = 5 V, $\overline{CAS}$ high			±10	μA
I_{DD1}	Average operating current during read or write cycle	At t_c = minimum cycle			54	mA
I_{DD2}‡	Standby current	After 1 memory cycle, $\overline{RAS}$ and $\overline{CAS}$ high		3.5	5	mA
I_{DD3}	Average refresh current	t_c = minimum cycle, $\overline{RAS}$ cycling, $\overline{CAS}$ high			46	mA
I_{DD4}	Average page-mode current	$t_{c(P)}$ = minimum cycle, $\overline{RAS}$ low, $\overline{CAS}$ cycling			46	mA

†All typical values are at T_C = 25°C and nominal supply voltages.
‡$V_{IL} \geq -0.6$ V on all inputs.

electrical characteristics over full ranges of recommended operating conditions (unless otherwise noted)

PARAMETER		TEST CONDITIONS	SMJ4416-15			SMJ4416-20			UNIT
			MIN	TYP†	MAX	MIN	TYP†	MAX	
V_{IK}	Input clamp voltage	I_I = −15 mA, see Figure 1			−1.2			−1.2	V
V_{OH}	High-level output voltage	I_{OH} = −2 mA	2.4			2.4			V
V_{OL}	Low-level output voltage	I_{OL} = 4.2 mA			0.4			0.4	V
I_I	Input current (leakage)	V_I = 0 V to 5.8 V, V_{DD} = 5 V, All other pins = 0 V			±10			±10	μA
I_O	Output current (leakage)	V_O = 0.4 V to 5.5 V, V_{DD} = 5 V, $\overline{CAS}$ high			±10			±10	μA
I_{DD1}	Average operating current during read or write cycle	At t_c = minimum cycle		40	48		35	42	mA
I_{DD2}‡	Standby current	After 1 memory cycle, $\overline{RAS}$ and $\overline{CAS}$ high		3.5	5		3.5	5	mA
I_{DD3}	Average refresh current	t_c = minimum cycle, $\overline{RAS}$ cycling, $\overline{CAS}$ high		25	40		21	34	mA
I_{DD4}	Average page-mode current	$t_{c(P)}$ = minimum cycle, $\overline{RAS}$ low, $\overline{CAS}$ cycling		25	40		21	34	mA

†All typical values are at T_C = 25°C and nominal supply voltages.
‡$V_{IL} \geq -0.6$ V on all inputs.

capacitance over recommended supply voltage range and operating case temperature range, f = 1 MHz

PARAMETER		SMJ4416		UNIT
		TYP†	MAX	
$C_{i(A)}$	Input capacitance, address inputs	5	7	pF
$C_{i(RC)}$	Input capacitance, strobe inputs	8	10	pF
$C_{i(W)}$	Input capacitance, write enable input	8	10	pF
$C_{i/o}$	Input/output capacitance, data ports	8	10	pF

†All typical values are at T_C = 25°C and nominal supply voltages.

switching characteristics over recommended supply voltage range and operating case temperature range

PARAMETER		TEST CONDITIONS	ALT. SYMBOL	SMJ4416-12 MIN	SMJ4416-12 MAX	UNIT
$t_{a(C)}$	Access time from $\overline{CAS}$	C_L = 100 pF, Load = 2 Series 74 TTL gates	t_{CAC}		70	ns
$t_{a(R)}$	Access time from $\overline{RAS}$	t_{RLCL} = MAX, C_L = 100 pF Load = 2 Series 74 TTL gates	t_{RAC}		120	ns
$t_{a(G)}$	Access time after $\overline{G}$ low	C_L = 100 pF, Load = 2 Series 74 TTL gates			30	ns
$t_{dis(CH)}$	Output disable time after $\overline{CAS}$ high	C_L = 100 pF, Load = 2 Series 74 TTL gates	t_{OFF}	0	30	ns
$t_{dis(G)}$	Output disable time after $\overline{G}$ high	C_L = 100 pF, Load = 2 Series 74 TTL gates		0	30	ns

PARAMETER		TEST CONDITIONS	ALT. SYMBOL	SMJ4416-15 MIN	SMJ4416-15 MAX	SMJ4416-20 MIN	SMJ4416-20 MAX	UNIT
$t_{a(C)}$	Access time from $\overline{CAS}$	C_L = 100 pF, Load = 2 Series 74 TTL gates	t_{CAC}		80		120	ns
$t_{a(R)}$	Access time from $\overline{RAS}$	t_{RLCL} = MAX, C_L = 100 pF Load = 2 Series 74 TTL gates	t_{RAC}		150		200	ns
$t_{a(G)}$	Access time after $\overline{G}$ low	C_L = 100 pF, Load = 2 Series 74 TTL gates			40		50	ns
$t_{dis(CH)}$	Output disable time after $\overline{CAS}$ high	C_L = 100 pF, Load = 2 Series 74 TTL gates	t_{OFF}	0	30	0	40	ns
$t_{dis(G)}$	Output disable time after $\overline{G}$ high	C_L = 100 pF, Load = 2 Series 74 TTL gates		0	30	0	40	ns

timing requirements over recommended supply voltage range and operating case temperature range

PARAMETER		ALT. SYMBOL	SMJ4416-12 MIN	SMJ4416-12 MAX	UNIT
$t_{c(P)}$	Page mode cycle time	t_{PC}	120		ns
$t_{c(rd)}$	Read cycle time*	t_{RC}	230		ns
$t_{c(W)}$	Write cycle time	t_{WC}	230		ns
$t_{c(rdW)}$	Read-write/read-modify-write cycle time	t_{RWC}	320		ns
$t_{w(CH)}$	Pulse width, $\overline{CAS}$ high (precharge time)**	t_{CP}	40		ns
$t_{w(CL)}$	Pulse width, $\overline{CAS}$ low†	t_{CAS}	70	10,000	ns
$t_{w(RH)}$	Pulse width $\overline{RAS}$ high (precharge time)	t_{RP}	80		ns
$t_{w(RL)}$	Pulse width, $\overline{RAS}$ low‡	t_{RAS}	120	10,000	ns
$t_{w(W)}$	Write pulse width	t_{WP}	30		ns
t_t	Transition times (rise and fall) for $\overline{RAS}$ and $\overline{CAS}$	t_T	3	50	ns
$t_{su(CA)}$	Column address setup time	t_{ASC}	0		ns
$t_{su(RA)}$	Row address setup time	t_{ASR}	0		ns
$t_{su(D)}$	Data setup time	t_{DS}	0		ns
$t_{su(rd)}$	Read command setup time	t_{RCS}	0		ns
$t_{su(WCH)}$	Write command setup time before $\overline{CAS}$ high	t_{CWL}	50		ns
$t_{su(WRH)}$	Write command setup time before $\overline{RAS}$ high	t_{RWL}	50		ns
$t_{h(CLCA)}$	Column address hold time after $\overline{CAS}$ low	t_{CAH}	35		ns
$t_{h(RA)}$	Row address hold time	t_{RAH}	15		ns
$t_{h(RLCA)}$	Column address hold time after $\overline{RAS}$ low	t_{AR}	85		ns
$t_{h(CLD)}$	Data hold time after $\overline{CAS}$ low	t_{DH}	40		ns
$t_{h(RLD)}$	Data hold time after $\overline{RAS}$ low	t_{DHR}	100		ns
$t_{h(WLD)}$	Data hold time after $\overline{W}$ low	t_{DH}	30		ns
$t_{h(RHrd)}$	Read command hold time after $\overline{RAS}$ high	t_{RRH}	10		ns
$t_{h(CHrd)}$	Read command hold time after $\overline{CAS}$ high	t_{RCH}	0		ns
$t_{h(CLW)}$	Write command hold time after $\overline{CAS}$ low	t_{WCH}	40		ns
$t_{h(RLW)}$	Write command hold time after $\overline{RAS}$ low	t_{WCR}	100		ns
t_{RLCH}	Delay time, $\overline{RAS}$ low to $\overline{CAS}$ high	t_{CSH}	150		ns
t_{CHRL}	Delay time, $\overline{CAS}$ high to $\overline{RAS}$ low	t_{CRP}	0		ns
t_{CLRH}	Delay time, $\overline{CAS}$ low to $\overline{RAS}$ high	t_{RSH}	80		ns
t_{CLWL}	Delay time, $\overline{CAS}$ low to $\overline{W}$ low (read, modify-write-cycle only)***	t_{CWD}	120		ns
t_{RLCL}	Delay time, $\overline{RAS}$ low to $\overline{CAS}$ low (maximum value specified only to guarantee access time)	t_{RCD}	20	50	ns
t_{RLWL}	Delay time, $\overline{RAS}$ low to $\overline{W}$ low (read, modify-write-cycle only)***	t_{RWD}	170		ns
t_{WLCL}	Delay time, $\overline{W}$ low to $\overline{CAS}$ low (early write cycle)	t_{WCS}	−5		ns
t_{GHD}	Delay time, $\overline{G}$ high before data applied at DQ		30		ns
t_{rf}	Refresh time interval	t_{REF}		4	ms

* Note: All cycle times assume $t_t = 5$ ns.
** Page mode only.
***Necessary to insure $\overline{G}$ has disabled the output buffers prior to applying data to the device.
†In a read-modify-write cycle, t_{CLWL} and $t_{su(WCH)}$ must be observed. Depending on the user's transition times, this may require additional $\overline{CAS}$ low time $t_{w(CL)}$.
‡In a read-modify-write cycle, t_{RLWL} and $t_{su(WRH)}$ must be observed. Depending on the user's transition times, this may require additional $\overline{RAS}$ low time $t_{w(RL)}$.

timing requirements over recommended supply voltage range and operating case temperature range

PARAMETER		ALT. SYMBOL	SMJ4416-15		SMJ4416-20		UNIT
			MIN	MAX	MIN	MAX	
$t_{c(P)}$	Page mode cycle time	t_{PC}	140		210		ns
$t_{c(rd)}$	Read cycle time*	t_{RC}	260		330		ns
$t_{c(W)}$	Write cycle time	t_{WC}	260		330		ns
$t_{c(rdW)}$	Read-write/read-modify-write cycle time	t_{RWC}	360		440		ns
$t_{w(CH)}$	Pulse width, $\overline{CAS}$ high (precharge time)**	t_{CP}	50		80		ns
$t_{w(CL)}$	Pulse width, $\overline{CAS}$ low†	t_{CAS}	80	10,000	120	10,000	ns
$t_{w(RH)}$	Pulse width $\overline{RAS}$ high (precharge time)	t_{RP}	100		120		ns
$t_{w(RL)}$	Pulse width, $\overline{RAS}$ low‡	t_{RAS}	150	10,000	200	10,000	ns
$t_{w(W)}$	Write pulse width	t_{WP}	40		50		ns
t_t	Transition times (rise and fall) for $\overline{RAS}$ and $\overline{CAS}$	t_T	3	50	3	50	ns
$t_{su(CA)}$	Column address setup time	t_{ASC}	0		0		ns
$t_{su(RA)}$	Row address setup time	t_{ASR}	0		0		ns
$t_{su(D)}$	Data setup time	t_{DS}	0		0		ns
$t_{su(rd)}$	Read command setup time	t_{RCS}	0		0		ns
$t_{su(WCH)}$	Write command setup time before $\overline{CAS}$ high	t_{CWL}	60		80		ns
$t_{su(WRH)}$	Write command setup time before $\overline{RAS}$ high	t_{RWL}	60		80		ns
$t_{h(CLCA)}$	Column address hold time after $\overline{CAS}$ low	t_{CAH}	40		50		ns
$t_{h(RA)}$	Row address hold time	t_{RAH}	20		25		ns
$t_{h(RLCA)}$	Column address hold time after $\overline{RAS}$ low	t_{AR}	110		130		ns
$t_{h(CLD)}$	Data hold time after $\overline{CAS}$ low	t_{DH}	60		80		ns
$t_{h(RLD)}$	Data hold time after $\overline{RAS}$ low	t_{DHR}	130		160		ns
$t_{h(WLD)}$	Data hold time after $\overline{W}$ low	t_{DH}	40		50		ns
$t_{h(RHrd)}$	Read command hold time after $\overline{RAS}$ high	t_{RRH}	10		10		ns
$t_{h(CHrd)}$	Read command hold time after $\overline{CAS}$ high	t_{RCH}	0		0		ns
$t_{h(CLW)}$	Write command hold time after $\overline{CAS}$ low	t_{WCH}	60		80		ns
$t_{h(RLW)}$	Write command hold time after $\overline{RAS}$ low	t_{WCR}	130		160		ns
t_{RLCH}	Delay time, $\overline{RAS}$ low to $\overline{CAS}$ high	t_{CSH}	150		200		ns
t_{CHRL}	Delay time, $\overline{CAS}$ high to $\overline{RAS}$ low	t_{CRP}	0		0		ns
t_{CLRH}	Delay time, $\overline{CAS}$ low to $\overline{RAS}$ high	t_{RSH}	80		120		ns
t_{CLWL}	Delay time, $\overline{CAS}$ low to $\overline{W}$ low (read, modify-write-cycle only)***	t_{CWD}	120		150		ns
t_{RLCL}	Delay time, $\overline{RAS}$ low to $\overline{CAS}$ low (maximum value specified only to guarantee access time)	t_{RCD}	20	70	25	80	ns
t_{RLWL}	Delay time, $\overline{RAS}$ low to $\overline{W}$ low (read, modify-write-cycle only)***	t_{RWD}	190		230		ns
t_{WLCL}	Delay time, $\overline{W}$ low to $\overline{CAS}$ low (early write cycle)	t_{WCS}	−5		−5		ns
t_{GHD}	Delay time, $\overline{G}$ high before data applied at DQ		30		40		ns
t_{rf}	Refresh time interval	t_{REF}		4		4	ms

* Note: All cycle times assume t_t = 5 ns.
** Page mode only.
*** Necessary to insure $\overline{G}$ has disabled the output buffers prior to applying data to the device.
† In a read-modify-write cycle, t_{CLWL} and $t_{su(WCH)}$ must be observed. Depending on the user's transition times, this may require additional $\overline{CAS}$ low time $t_{w(CL)}$.
‡ In a read-modify-write cycle, t_{RLWL} and $t_{su(WRH)}$ must be observed. Depending on the user's transition times, this may require additional $\overline{RAS}$ low time $t_{w(RL)}$.

PARAMETER MEASUREMENT INFORMATION

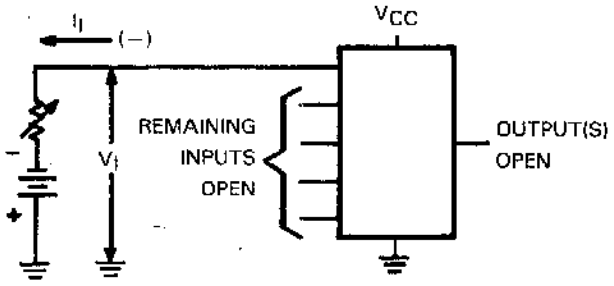

NOTE: Each input is tested separately.

FIGURE 1 — INPUT CLAMP VOLTAGE TEST CIRCUIT

read cycle timing

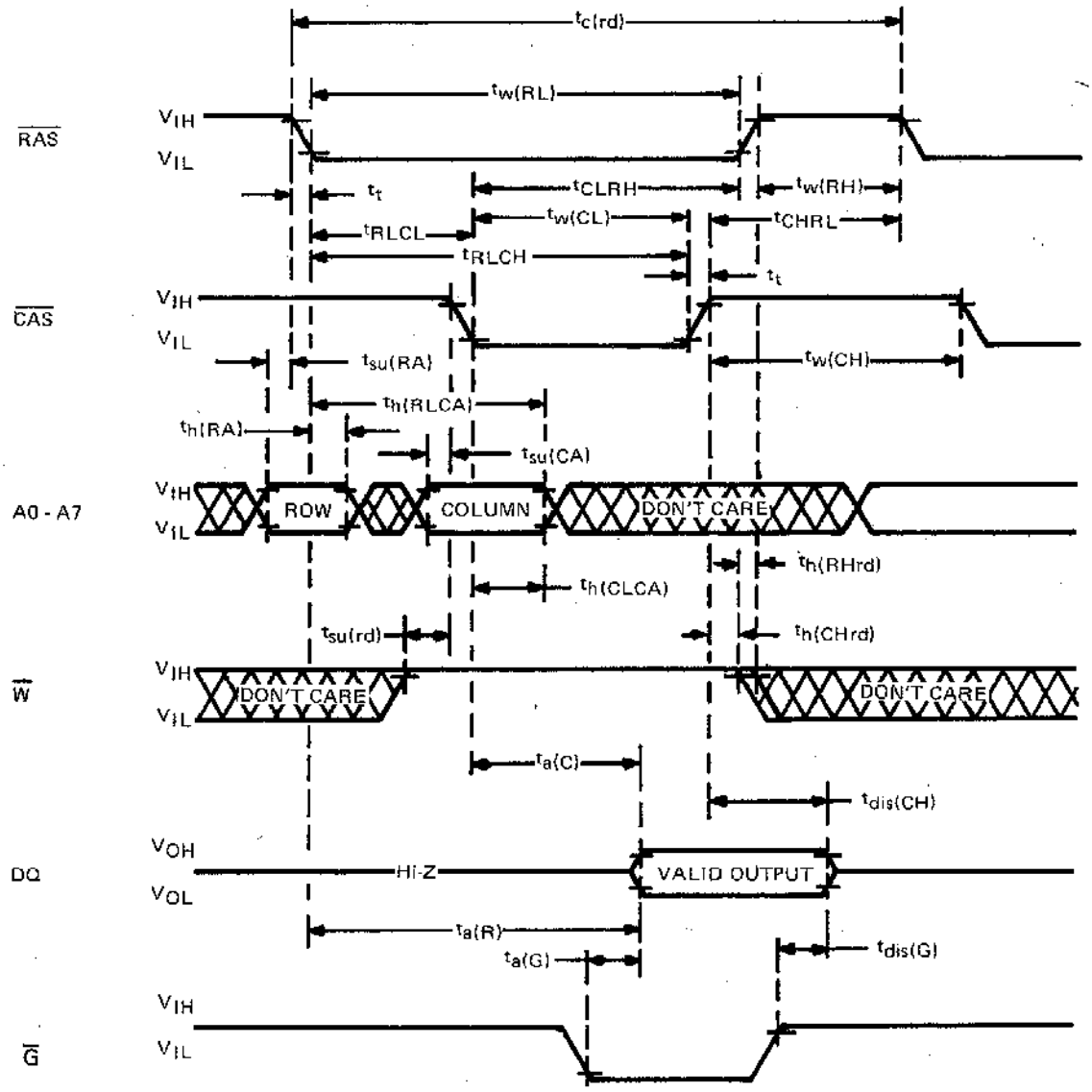

early write cycle timing

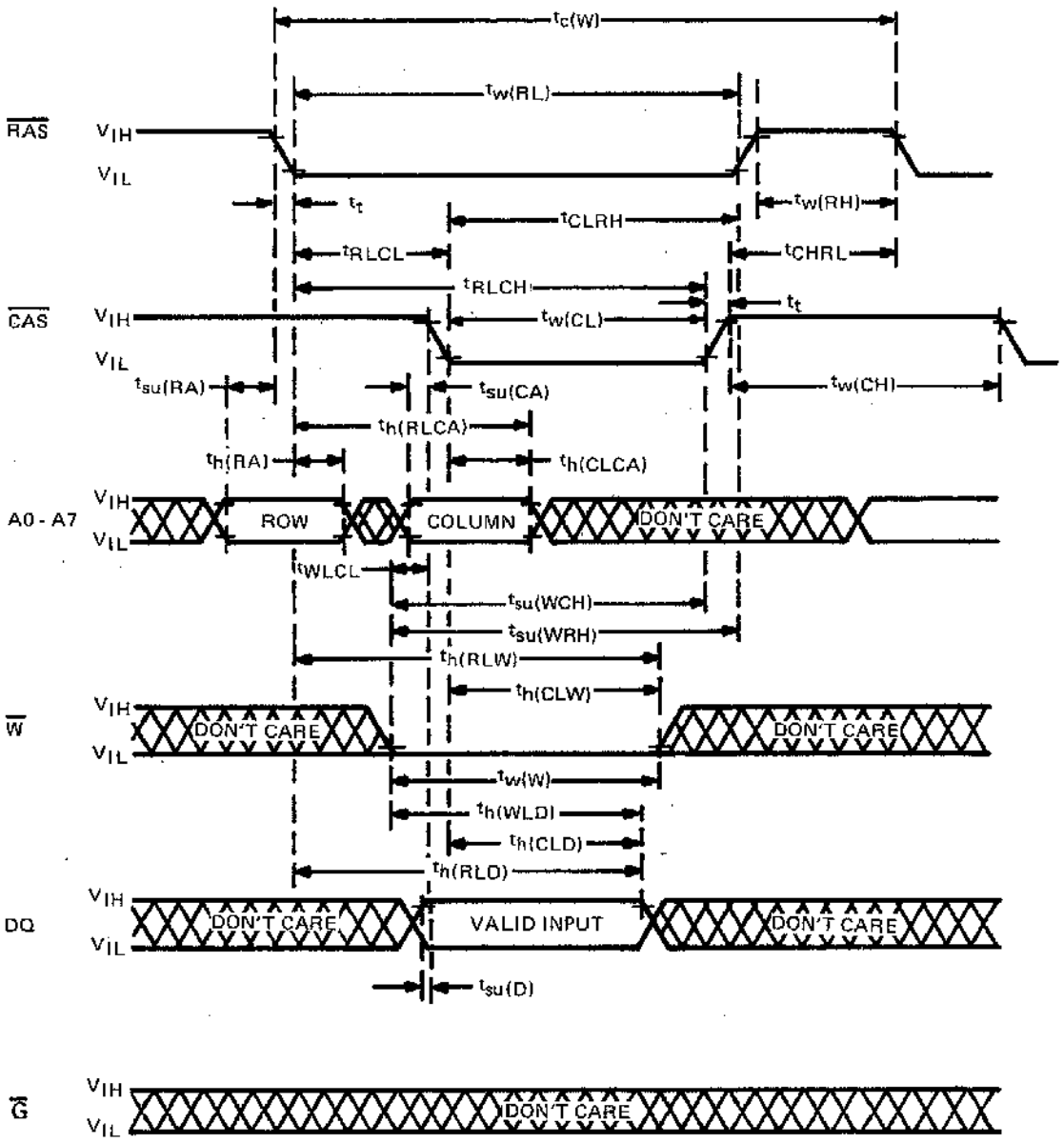

write cycle timing

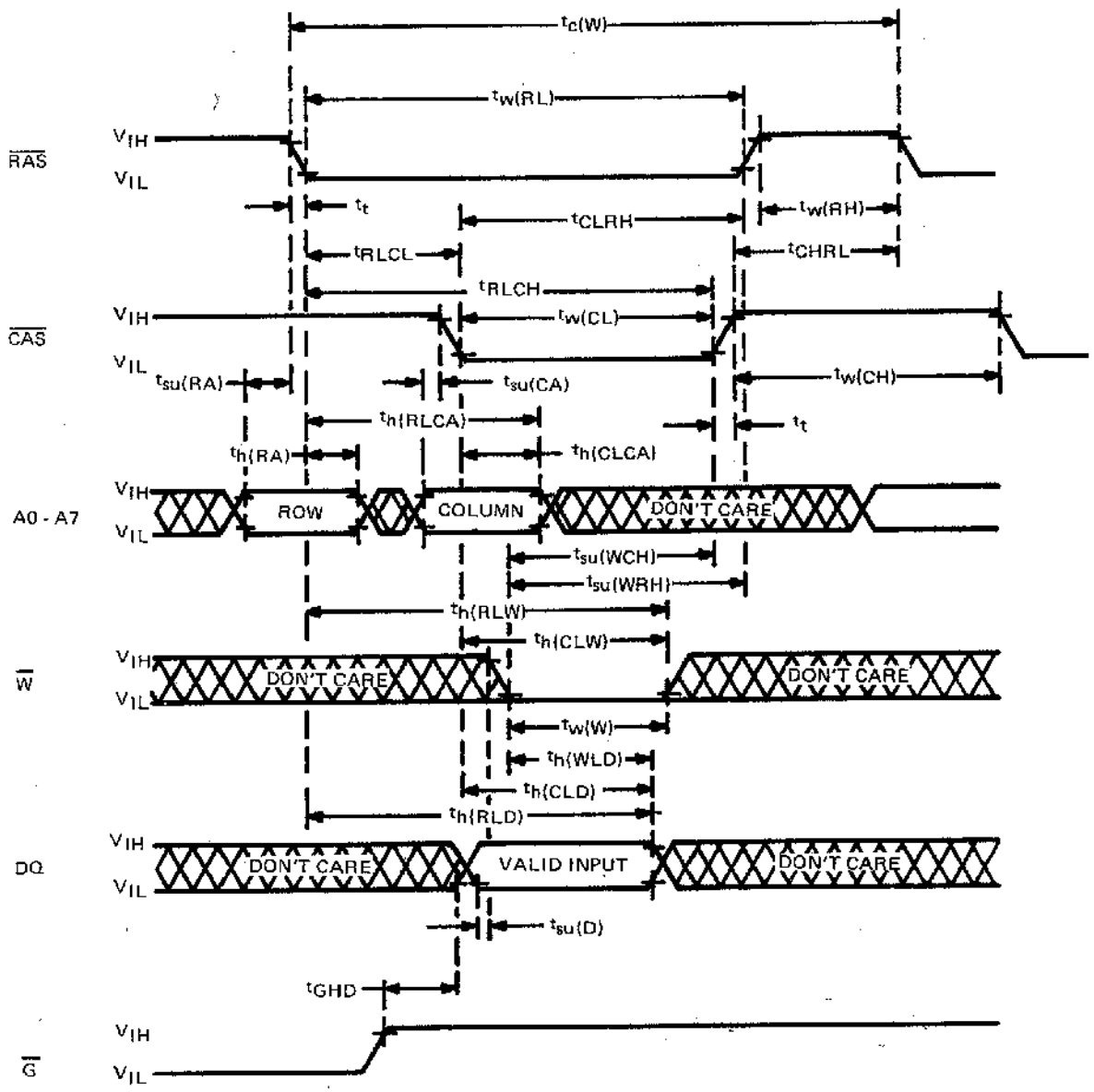

read-write/read-modify-write cycle timing

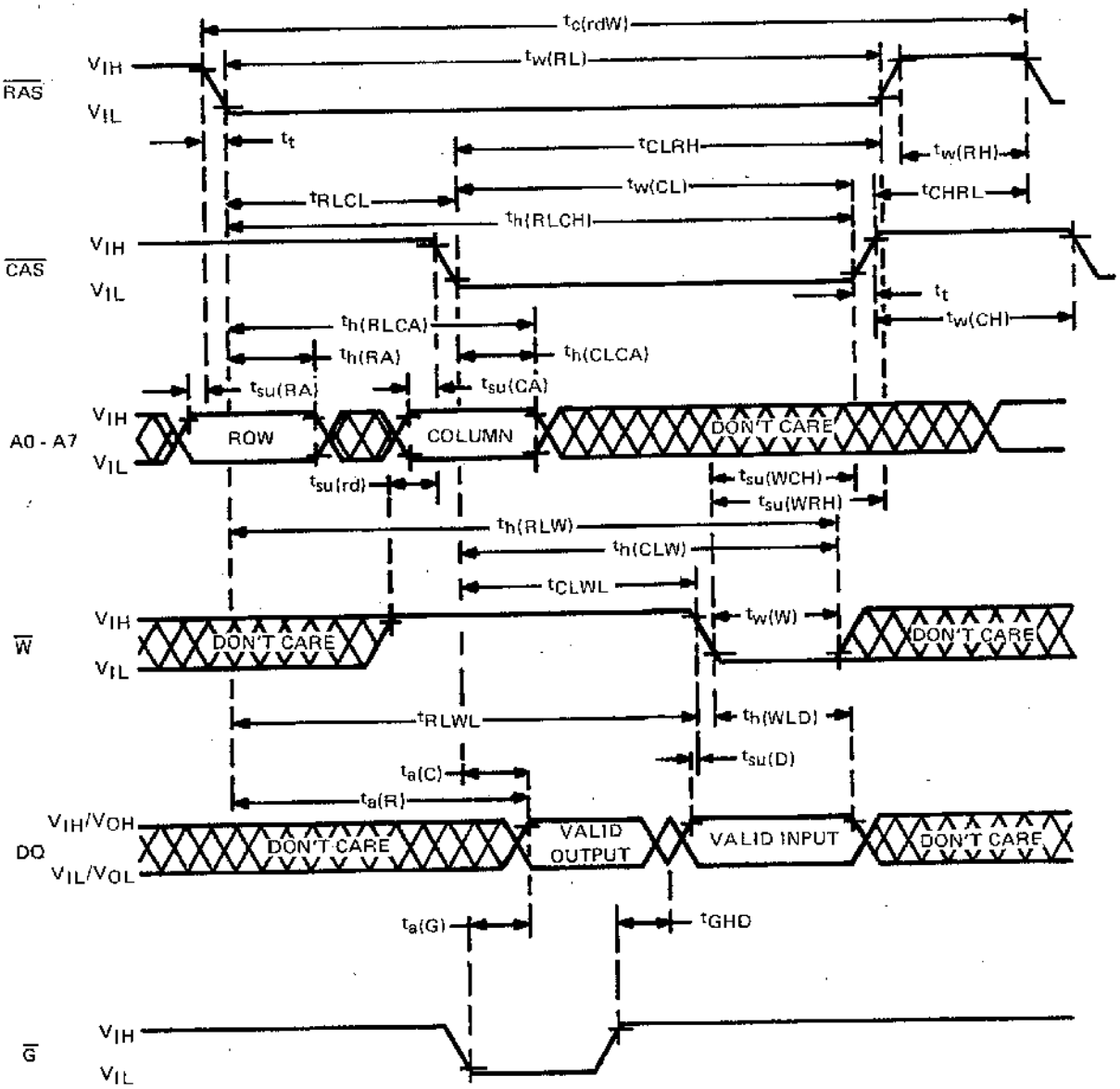

page-mode read cycle timing

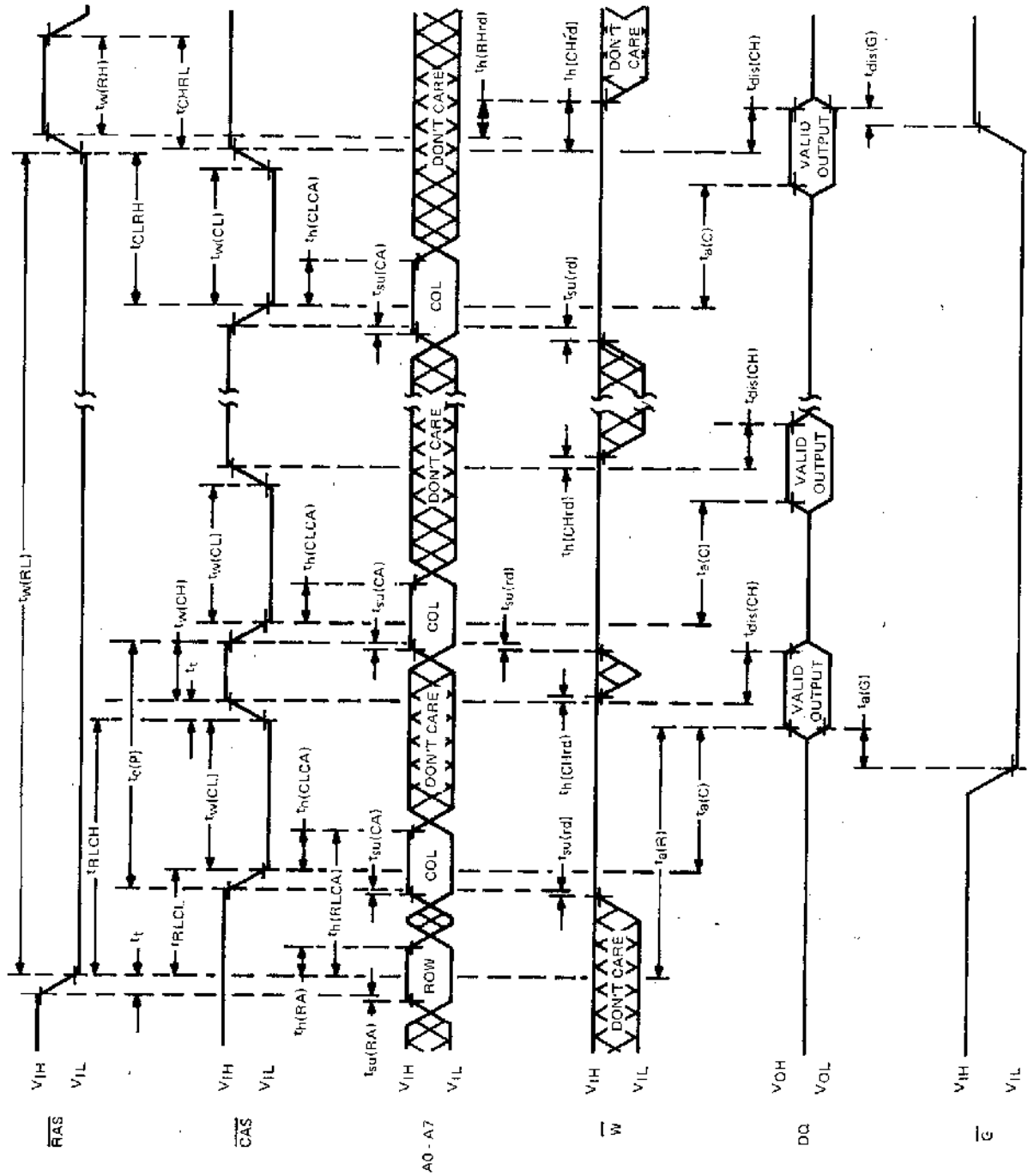

NOTE: A write cycle or read-modify-write cycle can be intermixed with read cycles as long as the write and read-modify-write timing specifications are not violated.

page-mode write cycle timing

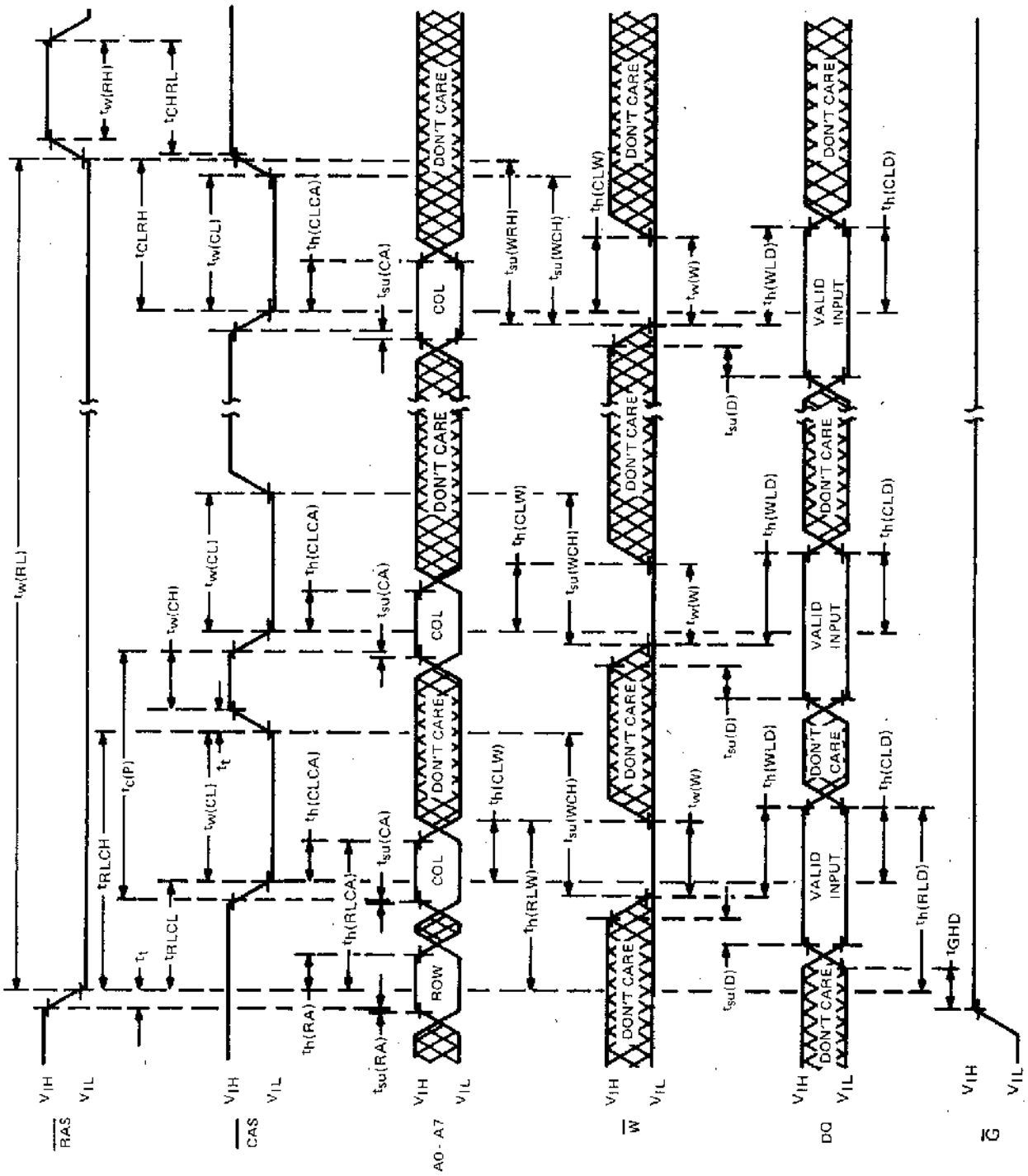

NOTE: A read cycle or a read-modify-write cycle can be intermixed with write cycles as long as read and read-modify-write timing specifications are not violated.

page mode read-modify-write timing

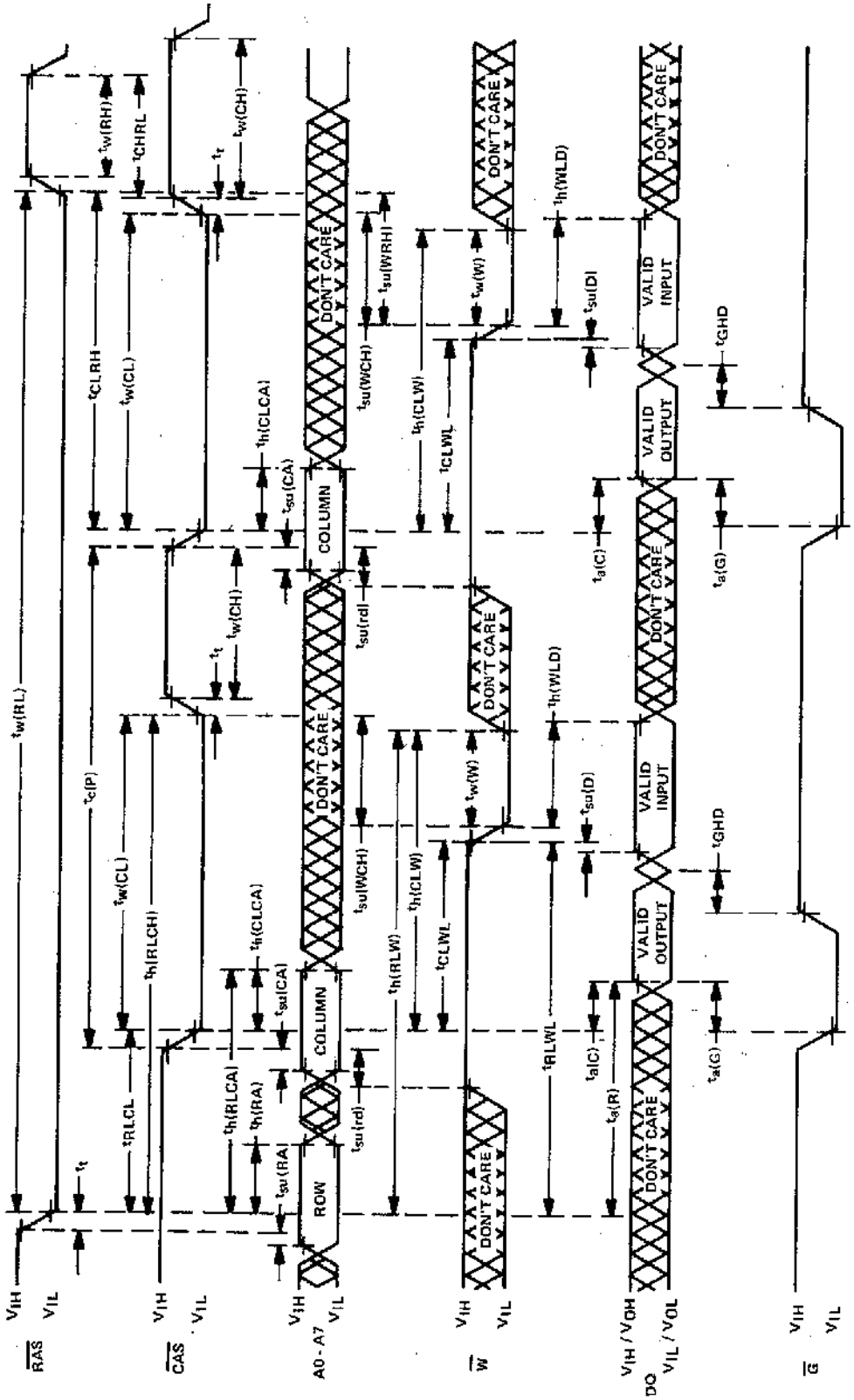

NOTE: A read cycle or a write cycle can be intermixed with read-modify-write cycles as long as read and write timing specifications are not violated.

RAS-only refresh timing

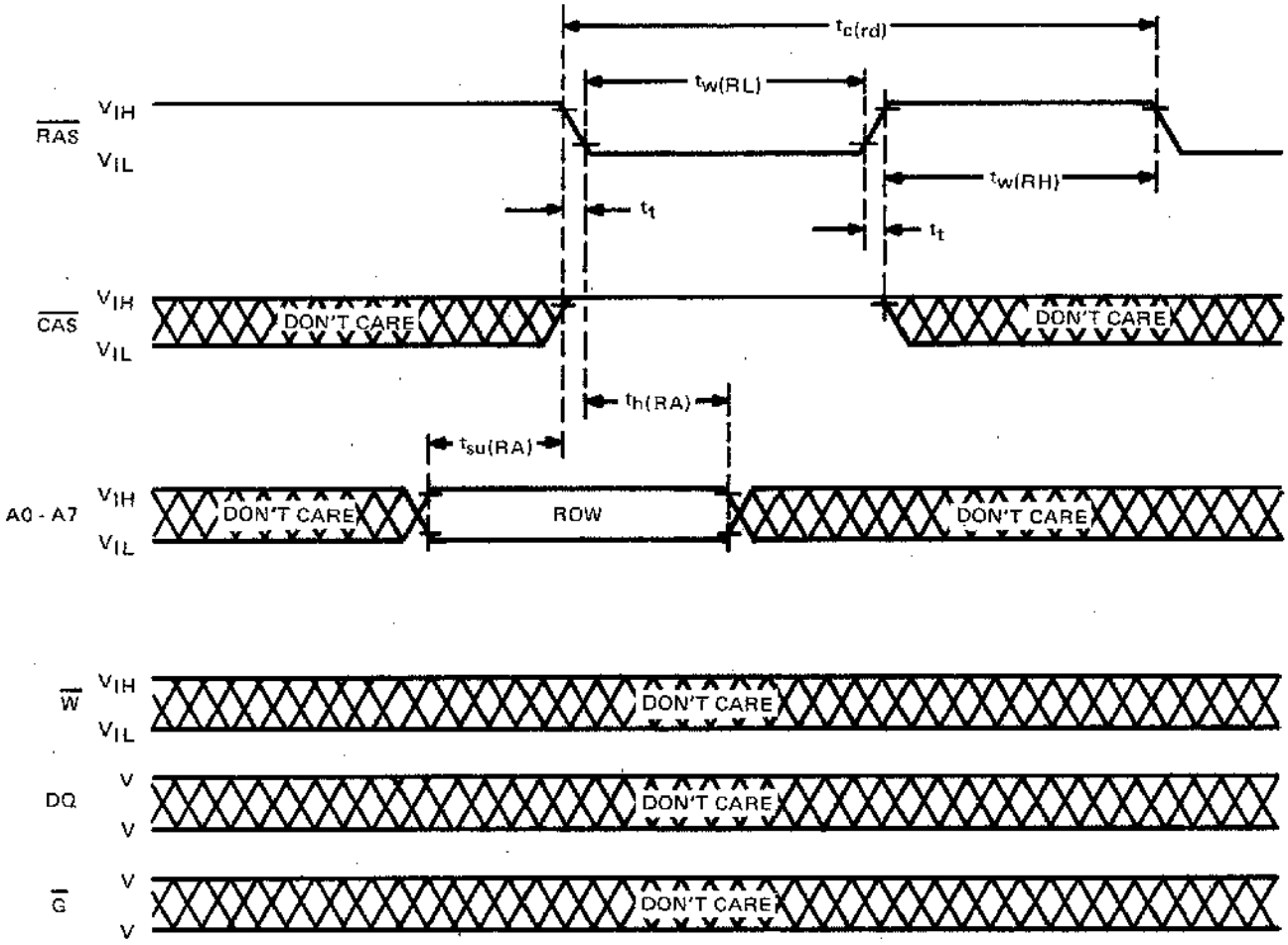

I_{DD1} VS CYCLE TIME

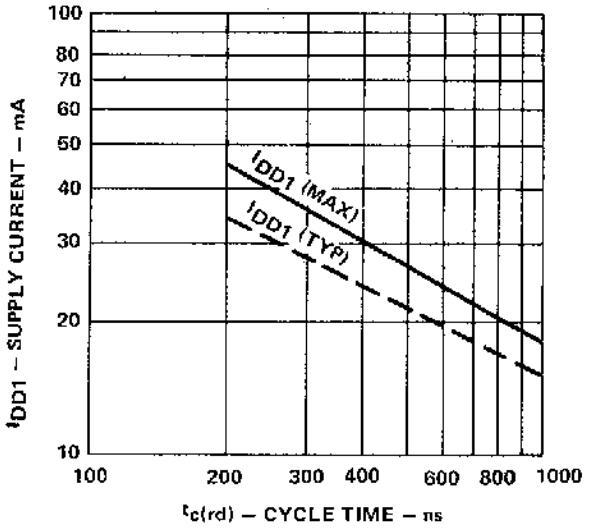

ACCESS TIME DERATING CURVE