INTERFACE CIRCUIT (RELAY AND LAMP-DRIVER)

The TDE1737 is a monolithic amplifier designed for high current and high voltage applications, specifically to drive lamps, relays and control of stepper motors.

This device is essentially blow-out proof. Current limiting is available to limit the peak output current to a safe value, the adjustment only requires one external resistor. In addition, thermal shut down is provided to keep the I.C. from overheating. If internal dissipation becomes too great, the driver will shut down to prevent excessive heating.

The output is also protected against short-circuits with the positive power supply.

The device operates over a wide range of supply voltages from standard ± 15 V operational amplifier supplies down to the single + 12 V or + 24 V used for industrial electronic systems.

- High output current
- Adjustable short-circuit protection
- Internal thermal protection with hysteresis to avoid the intermediate output levels.
- Large supply voltage range : + 8 V to + 45 V

INTERFACE CIRCUIT
RELAY AND LAMP DRIVER

CASES

CB-107

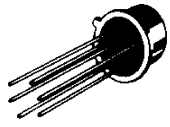

CM SUFFIX
METAL CAN

CB-511

FP SUFFIX
PLASTIC MICROPACKAGE

CB-98

DP SUFFIX
PLASTIC PACKAGE

ORDERING INFORMATION

PART NUMBER	TEMPERATURE RANGE	PACKAGE		
		CM	DP	FP
TDE1737	− 25°C to + 85°C	•	•	•
Example : TDE1737DP				

PIN ASSIGNMENTS

(Top views)

CB-107

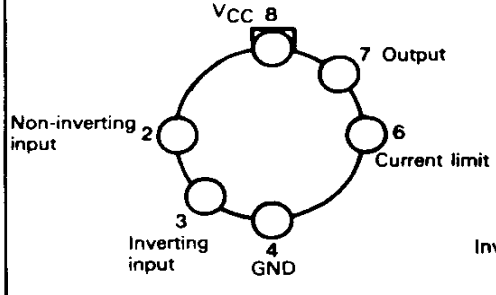

CB-511

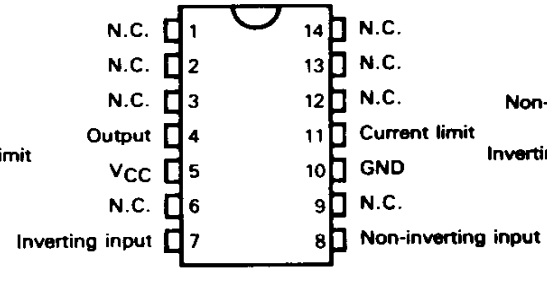

CB-98

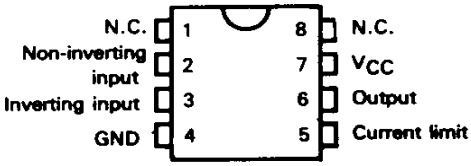

Ref. 00160

MAXIMUM RATINGS

Rating	Symbol	Value	Unit
Supply voltage	V_{CC}	50	V
Input voltage	V_I	50	V
Differential input voltage	V_{ID}	50	V
Output current	I_O	1000	mA
Power dissipation	P_{tot}	Internally limited	W
Operating free-air temperature range	T_{oper}	−25 to +85	°C
Storage temperature range	T_{stg}	−65 to +150	°C

THERMAL CHARACTERISTICS

Characteristic		Symbol	Value	Unit
Junction-case thermal resistance	CB-107 CB-98	$R_{th(j-c)}$	45 50	°C/W
Junction-ambient thermal resistance	CB-107 CB-98	$R_{th(j-a)}$	185 120	°C/W
Junction-ceramic substrate (Case glued to substrate)	CB-511	—	90	°C/W
Junction-ceramic substrate (Case glued to substrate, substrate temperature maintained constant)	CB-511	—	65	°C/W

SCHEMATIC DIAGRAM

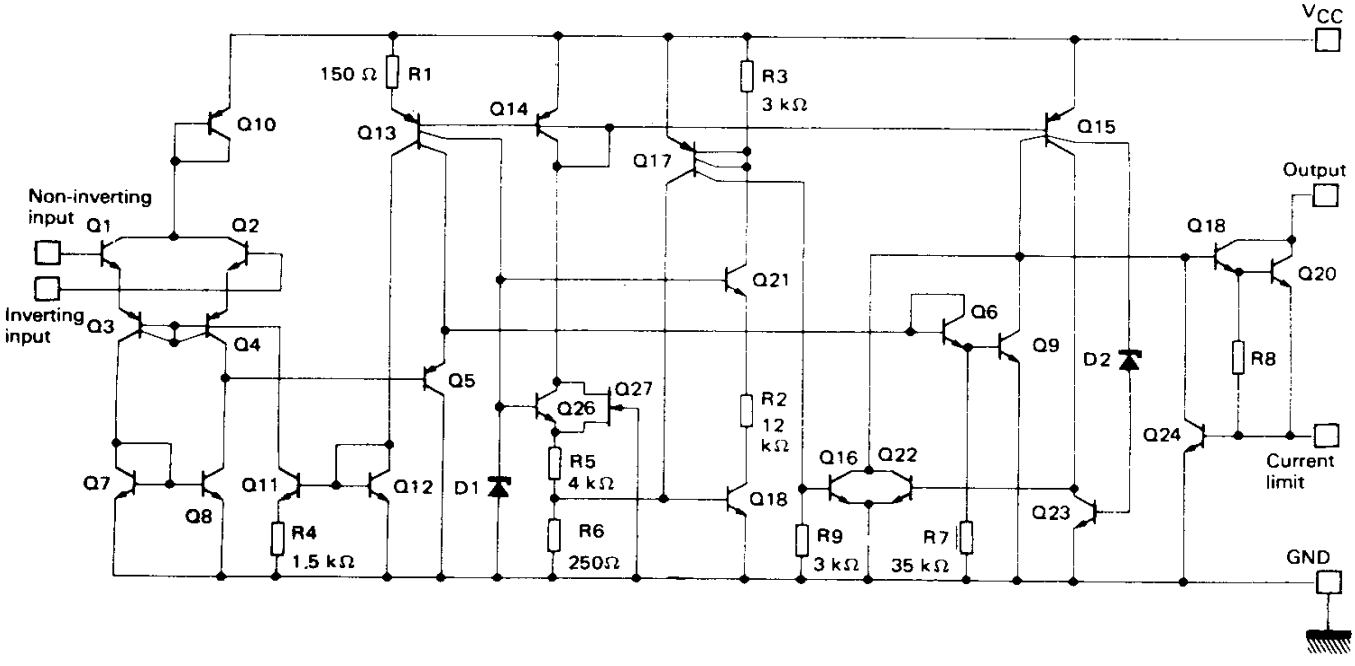

Case	Non-inverting input	Inverting input	GND	Current limit	Output	V_{CC}
CB-107	2	3	4	6	7	8
CB-98	2	3	4	5	6	7
CB-511	8	7	10	11	4	5

All other pins are not connected.

ELECTRICAL CHARACTERISTICS

$-25°C \leq T_{amb} \leq +85°C$, $+8\ V \leq V_{CC} \leq +45\ V$, $I_O \leq 300\ mA$, $T_j \leq +150°C$ (Unless otherwise specified)

Characteristic	Symbol	Min	Typ	Max	Unit
Input offset voltage - (Note 1)	V_{IO}	–	2	50	mV
Input bias current	I_{IB}	–	0.1	1.5	μA
Supply current ($V_{CC} = +24\ V$, $I_O = 0$)	I_{CC}	–	3	5	mA
Common-mode input voltage range	V_{CM}	2	–	$V_{CC} - 2$	V
Short-circuit current limit ($R_{SC} = 1.5\ \Omega$, $T_{case} = +25°C$)	I_{SC}	–	500	–	mA
Output saturation voltage (output low) ($V_I^+ - V_I^- \geq 50\ mA$, $I_O = 300\ mA$, $R_{SC} = 0$)	$V_{CC} - V_O$	–	1	1.5	V
Output leakage current (output high) ($V_O = V_{CC} = +24\ V$, $T_{amb} = +25°C$)	I_{OL}	–	–	10	μA

Note 1 : The offset voltage given is the maximum value of input voltage required to drive the output voltage within 2 V of the ground or the supply voltage.

Note 2 : Devices bonded on a 40 cm² glass-epoxy printed circuit 0.15 cm thick with 4 cm² of copper.

SIMPLIFIED SCHEMATIC

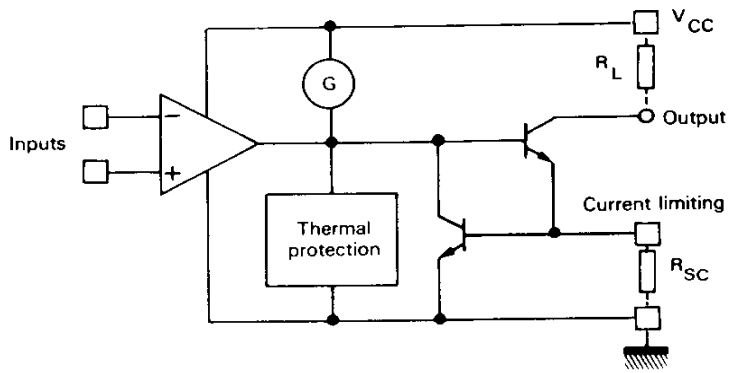

TYPICAL APPLICATION

BASIC CIRCUIT

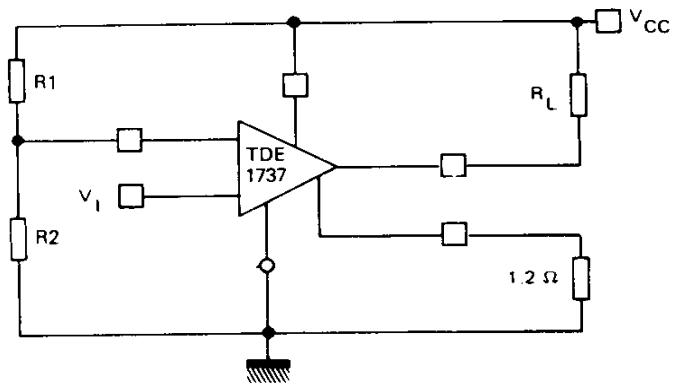

AVAILABLE OUTPUT CURRENT VERSUS LIMITING RESISTOR

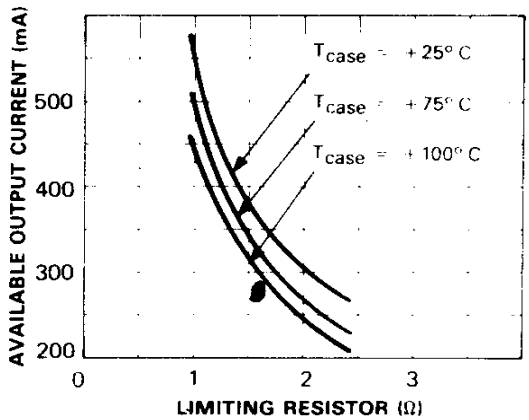

PEAK SHORT-CIRCUIT CURRENT VERSUS LIMITING RESISTOR

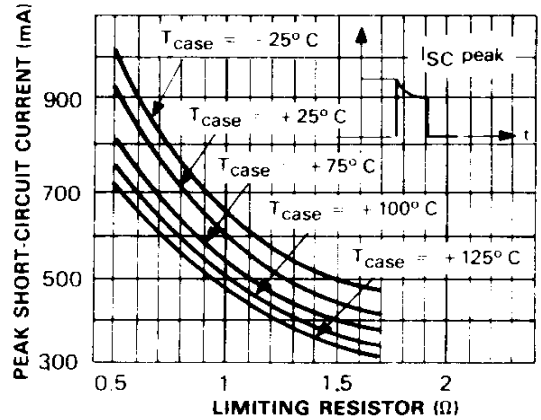

SHORT-CIRCUIT CURRENT VERSUS CASE TEMPERATURE

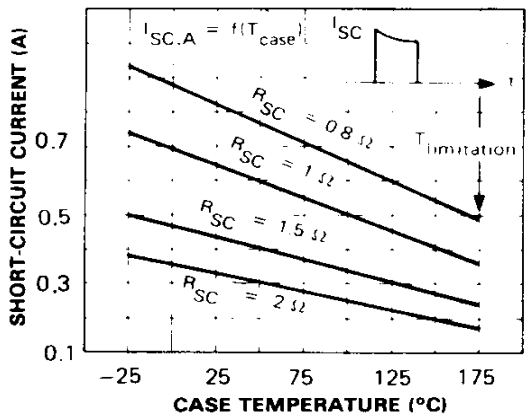

SAFE OPERATING AREA (NON REPETITIVE OVERLOAD)

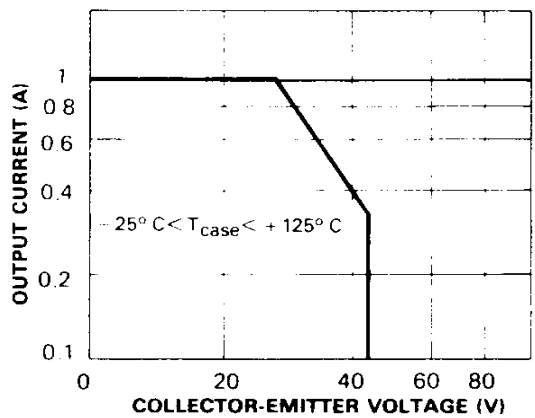

SATURATION VOLTAGE VERSUS OUTPUT CURRENT

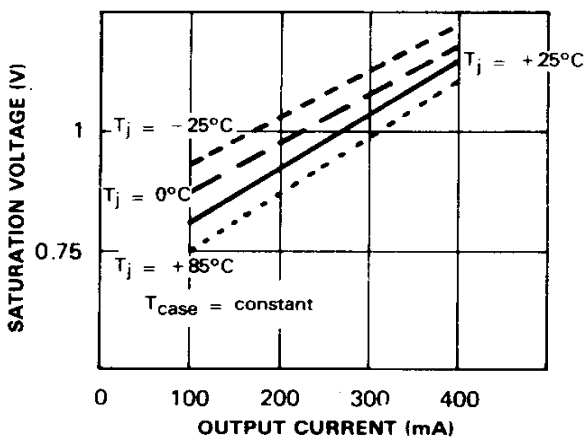

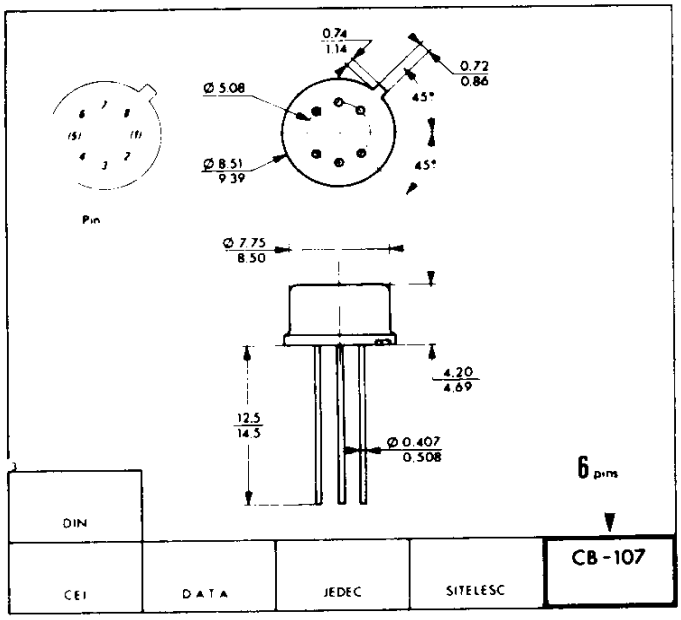

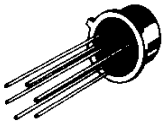

CB-107
CM SUFFIX
METAL CAN

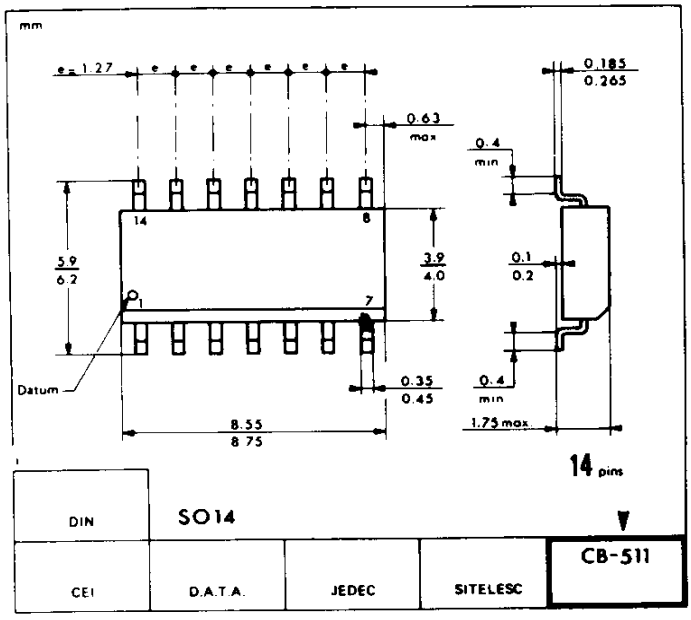

CB-511
FP SUFFIX
PLASTIC MICROPACKAGE

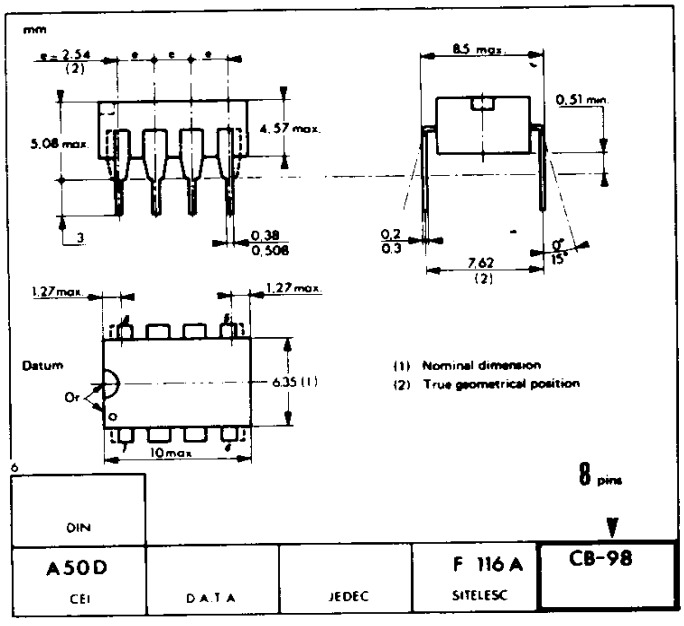

CB-98
DP SUFFIX
PLASTIC PACKAGE

These specifications are subject to change without notice.
Please inquire with our sales offices about the availability of the different packages.