- **Wide Operating Voltage Range of 2 V to 6 V**
- **Typical Switch Enable Time of 18 ns**
- **Low Power Consumption, 20-μA Max I_{CC}**
- **Low Input Current of 1 μA Max**
- **High Degree of Linearity**
- **High On-Off Output-Voltage Ratio**
- **Low Crosstalk Between Switches**
- **Low On-State Impedance . . . 50-Ω TYP at V_{CC} = 6 V**
- **Individual Switch Controls**

D, DB, N, NS, OR PW PACKAGE (TOP VIEW)

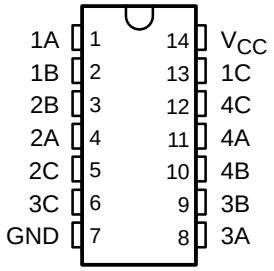

description/ordering information

The SN74HC4066 is a silicon-gate CMOS quadruple analog switch designed to handle both analog and digital signals. Each switch permits signals with amplitudes of up to 6 V (peak) to be transmitted in either direction.

Each switch section has its own enable input control (C). A high-level voltage applied to C turns on the associated switch section.

Applications include signal gating, chopping, modulation or demodulation (modem), and signal multiplexing for analog-to-digital and digital-to-analog conversion systems.

ORDERING INFORMATION

T_A	PACKAGE†		ORDERABLE PART NUMBER	TOP-SIDE MARKING
–40°C to 85°C	PDIP – N	Tube of 25	SN74HC4066N	SN74HC4066N
	SOIC – D	Tube of 50	SN74HC4066D	HC4066
		Reel of 2500	SN74HC4066DR	
		Reel of 250	SN74HC4066DT	
	SOP – NS	Reel of 2000	SN74HC4066NSR	HC4066
	SSOP – DB	Reel of 2000	SN74HC4066DBR	HC4066
	TSSOP – PW	Tube of 90	SN74HC4066PW	HC4066
		Reel of 2000	SN74HC4066PWR	
		Reel of 250	SN74HC4066PWT	

† Package drawings, standard packing quantities, thermal data, symbolization, and PCB design guidelines are available at www.ti.com/sc/package.

FUNCTION TABLE (each switch)

INPUT CONTROL (C)	SWITCH
L	OFF
H	ON

Please be aware that an important notice concerning availability, standard warranty, and use in critical applications of Texas Instruments semiconductor products and disclaimers thereto appears at the end of this data sheet.

PRODUCTION DATA information is current as of publication date. Products conform to specifications per the terms of Texas Instruments standard warranty. Production processing does not necessarily include testing of all parameters.

Copyright © 2003, Texas Instruments Incorporated

logic diagram, each switch (positive logic)

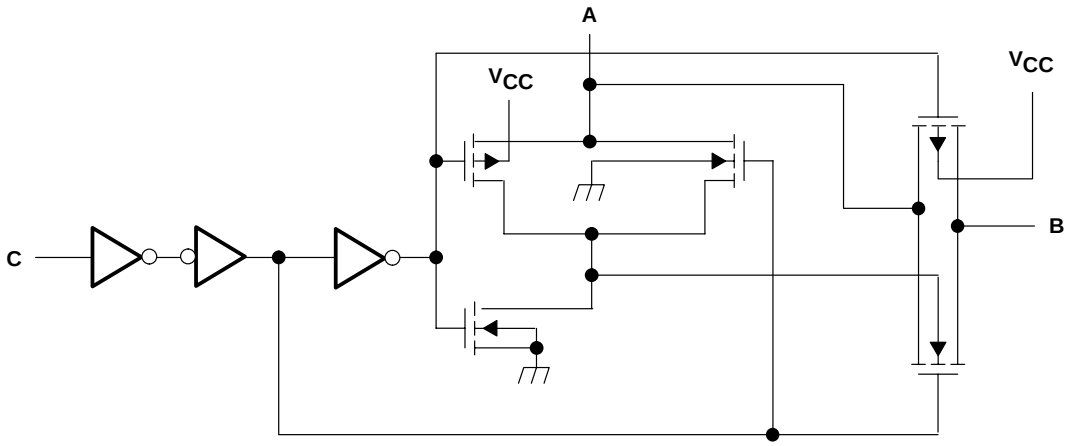

One of Four Switches

absolute maximum ratings over operating free-air temperature range (unless otherwise noted)†

Supply voltage range, V_{CC} (see Note 1)	–0.5 V to 7 V
Control-input diode current, I_I ($V_I < 0$ or $V_I > V_{CC}$)	±20 mA
I/O port diode current, I_I ($V_I < 0$ or $V_{I/O} > V_{CC}$)	±20 mA
On-state switch current ($V_{I/O} = 0$ to V_{CC})	±25 mA
Continuous current through V_{CC} or GND	±50 mA
Package thermal impedance, θ_{JA} (see Note 2): D package	86°C/W
DB package	96°C/W
N package	80°C/W
NS package	76°C/W
PW package	113°C/W
Storage temperature range, T_{stg}	–65°C to 150°C

† Stresses beyond those listed under “absolute maximum ratings” may cause permanent damage to the device. These are stress ratings only, and functional operation of the device at these or any other conditions beyond those indicated under “recommended operating conditions” is not implied. Exposure to absolute-maximum-rated conditions for extended periods may affect device reliability.

NOTES: 1. All voltages are with respect to ground unless otherwise specified.
2. The package thermal impedance is calculated in accordance with JESD 51-7.

recommended operating conditions (see Note 3)

			MIN	NOM	MAX	UNIT
V_{CC}	Supply voltage		2†	5	6	V
$V_{I/O}$	I/O port voltage		0		V_{CC}	V
V_{IH}	High-level input voltage, control inputs	V_{CC} = 2 V	1.5		V_{CC}	V
		V_{CC} = 4.5 V	3.15		V_{CC}	
		V_{CC} = 6 V	4.2		V_{CC}	
V_{IL}	Low-level input voltage, control inputs	V_{CC} = 2 V	0		0.3	V
		V_{CC} = 4.5 V	0		0.9	
		V_{CC} = 6 V	0		1.2	
$\Delta t/\Delta v$	Input transition rise/fall time	V_{CC} = 2 V			1000	ns
		V_{CC} = 4.5 V			500	
		V_{CC} = 6 V			400	
T_A	Operating free-air temperature		–40		85	°C

† With supply voltages at or near 2 V, the analog switch on-state resistance becomes very nonlinear. It is recommended that only digital signals be transmitted at these low supply voltages.

NOTE 3: All unused inputs of the device must be held at V_{CC} or GND to ensure proper device operation. Refer to the TI application report, *Implications of Slow or Floating CMOS Inputs*, literature number SCBA004.

electrical characteristics over recommended operating free-air temperature range (unless otherwise noted)

PARAMETER			TEST CONDITIONS	V_{CC}	T_A = 25°C			MIN	MAX	UNIT
					MIN	TYP	MAX			
r_{on}	On-state switch resistance		I_T = –1 mA, V_I = 0 to V_{CC}, V_C = V_{IH} (see Figure 1)	2 V		150				Ω
				4.5 V		50	85		106	
				6 V		30				
$r_{on(p)}$	Peak on-state resistance		V_I = V_{CC} or GND, V_C = V_{IH}, I_T = –1 mA	2 V		320				Ω
				4.5 V		70	170		215	
				6 V		50				
I_I	Control input current		V_C = 0 or V_{CC}	6 V		±0.1	±100		±1000	nA
I_{soff}	Off-state switch leakage current		V_I = V_{CC} or 0, V_O = V_{CC} or 0, V_C = V_{IL} (see Figure 2)	6 V			±0.1		±5	µA
I_{son}	On-state switch leakage current		V_I = V_{CC} or 0, V_C = V_{IH} (see Figure 3)	6 V			±0.1		±5	µA
I_{CC}	Supply current		V_I = 0 or V_{CC}, I_O = 0	6 V			2		20	µA
C_i	Input capacitance	A or B		5 V		9				pF
		C				3	10		10	
C_f	Feed-through capacitance	A to B	V_I = 0			0.5				pF
C_o	Output capacitance	A or B		5 V		9				pF

switching characteristics over recommended operating free-air temperature range

PARAMETER		FROM (INPUT)	TO (OUTPUT)	TEST CONDITIONS	V_{CC}	$T_A = 25°C$ MIN	TYP	MAX	MIN	MAX	UNIT
t_{PLH}, t_{PHL}	Propagation delay time	A or B	B or A	C_L = 50 pF (see Figure 4)	2 V		10	60		75	ns
					4.5 V		4	12		15	
					6 V		3	10		13	
t_{PZH}, t_{PZL}	Switch turn-on time	C	A or B	R_L = 1 kΩ, C_L = 50 pF (see Figure 5)	2 V		70	180		225	ns
					4.5 V		21	36		45	
					6 V		18	31		38	
t_{PLZ}, t_{PHZ}	Switch turn-off time	C	A or B	R_L = 1 kΩ, C_L = 50 pF (see Figure 5)	2 V		50	200		250	ns
					4.5 V		25	40		50	
					6 V		22	34		43	
f_I	Control input frequency	C	A or B	C_L = 15 pF, R_L = 1 kΩ, $V_C = V_{CC}$ or GND, $V_O = V_{CC}/2$ (see Figure 6)	2 V		15				MHz
					4.5 V		30				
					6 V		30				
	Control feed-through noise	C	A or B	C_L = 50 pF, $R_{in} = R_L$ = 600 Ω, $V_C = V_{CC}$ or GND, f_{in} = 1 MHz (see Figure 7)	4.5 V		15				mV (rms)
					6 V		20				

operating characteristics, V_{CC} = 4.5 V, T_A = 25°C

PARAMETER		TEST CONDITIONS		TYP	UNIT
C_{pd}	Power dissipation capacitance per gate	C_L = 50 pF,	f = 1 MHz	45	pF
	Minimum through bandwidth, A to B or B to A† [20 log (V_O/V_I)] = –3 dB	C_L = 50 pF, $V_C = V_{CC}$	R_L = 600 Ω, (see Figure 8)	30	MHz
	Crosstalk between any switches‡	C_L = 10 pF, f_{in} = 1 MHz	R_L = 50 Ω, (see Figure 9)	45	dB
	Feed through, switch off, A to B or B to A‡	C_L = 50 pF, f_{in} = 1 MHz	R_L = 600 Ω, (see Figure 10)	42	dB
	Amplitude distortion rate, A to B or B to A	C_L = 50 pF, f_{in} = 1 kHz	R_L = 10 kΩ, (see Figure 11)	0.05%	

† Adjust the input amplitude for output = 0 dBm at f = 1 MHz. Input signal must be a sine wave.
‡ Adjust the input amplitude for input = 0 dBm at f = 1 MHz. Input signal must be a sine wave.

PARAMETER MEASUREMENT INFORMATION

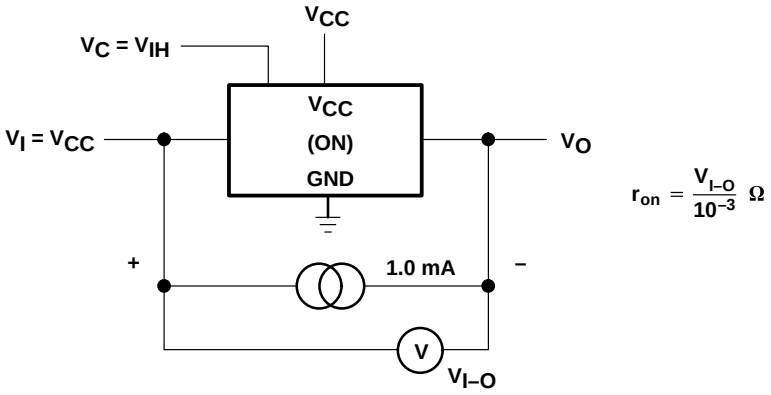

$$r_{on} = \frac{V_{I-O}}{10^{-3}}\ \Omega$$

Figure 1. On-State Resistance Test Circuit

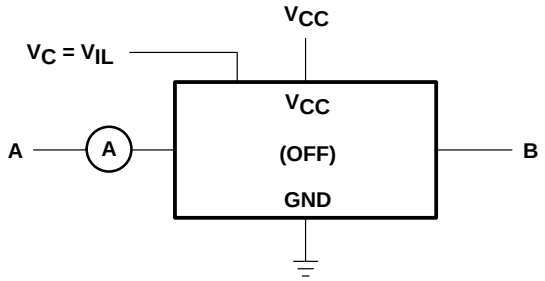

$V_S = V_A - V_B$
CONDITION 1: $V_A = 0$, $V_B = V_{CC}$
CONDITION 2: $V_A = V_{CC}$, $V_B = 0$

Figure 2. Off-State Switch Leakage-Current Test Circuit

PARAMETER MEASUREMENT INFORMATION

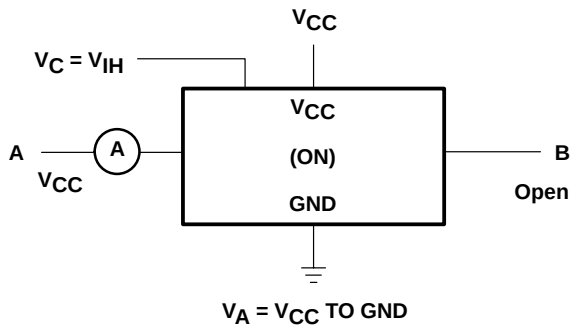

Figure 3. On-State Leakage-Current Test Circuit

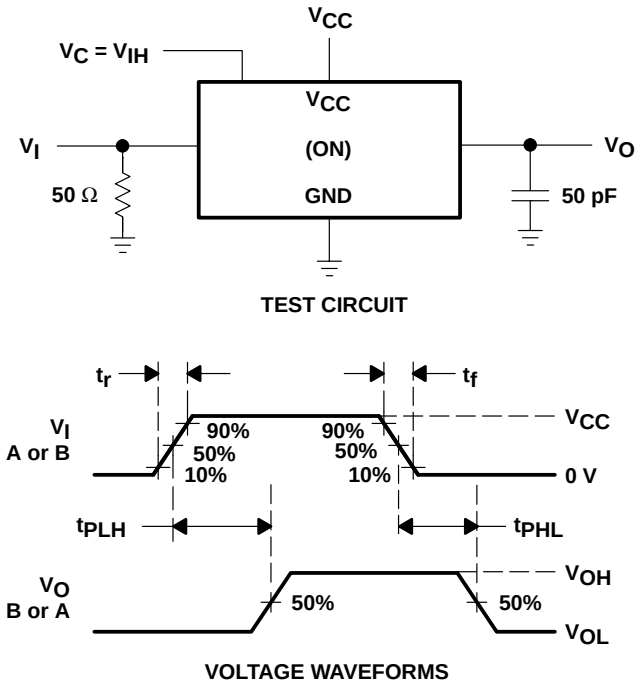

Figure 4. Propagation Delay Time, Signal Input to Signal Output

PARAMETER MEASUREMENT INFORMATION

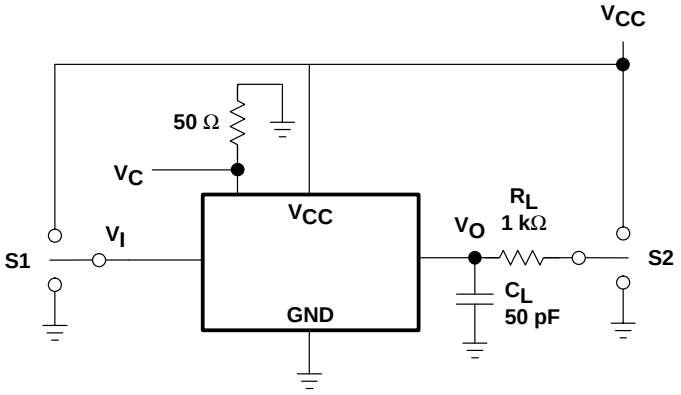

TEST	S1	S2
t_{PZL}	GND	V_{CC}
t_{PZH}	V_{CC}	GND
t_{PLZ}	GND	V_{CC}
t_{PHZ}	V_{CC}	GND

TEST CIRCUIT

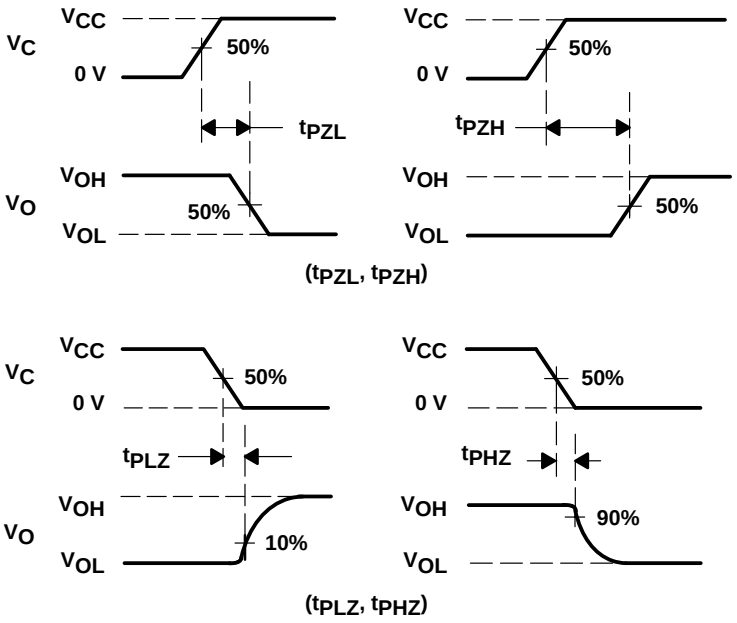

VOLTAGE WAVEFORMS

Figure 5. Switching Time (t_{PZL}, t_{PLZ}, t_{PZH}, t_{PHZ}), Control to Signal Output

PARAMETER MEASUREMENT INFORMATION

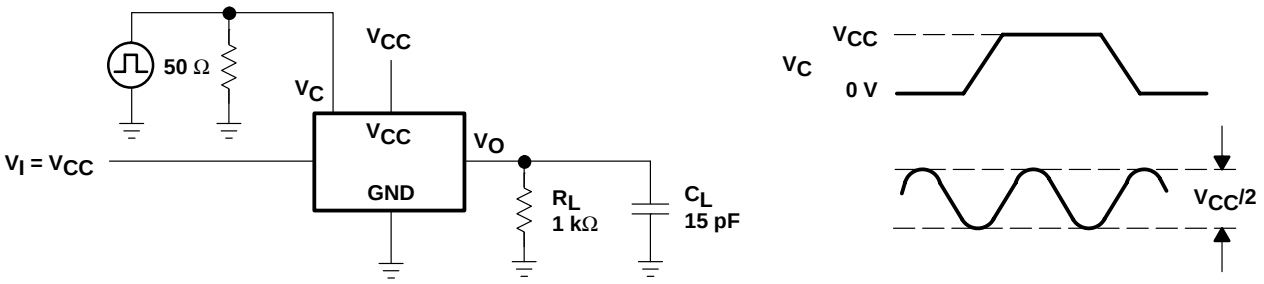

Figure 6. Control-Input Frequency

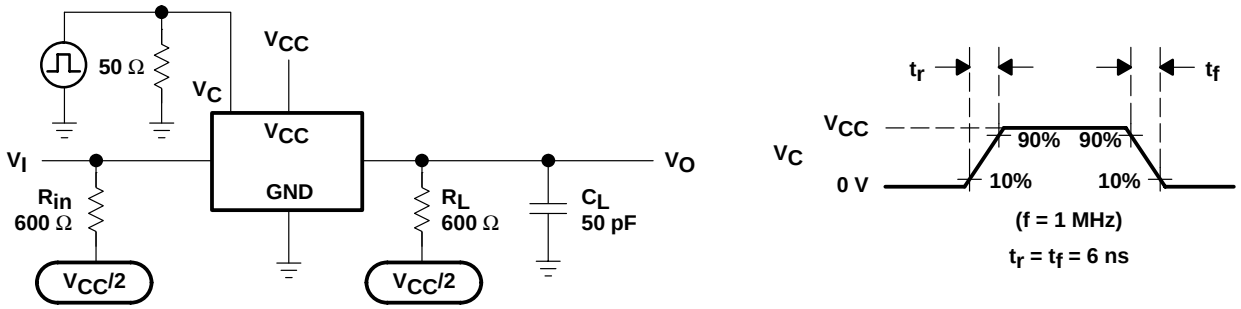

Figure 7. Control Feed-Through Noise

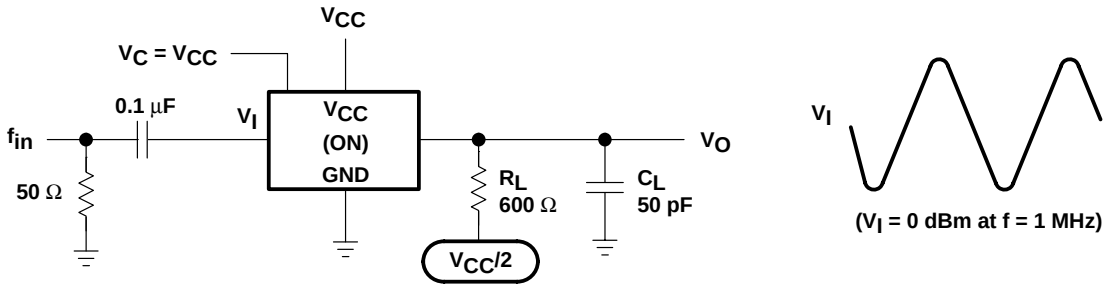

Figure 8. Minimum Through Bandwidth

PARAMETER MEASUREMENT INFORMATION

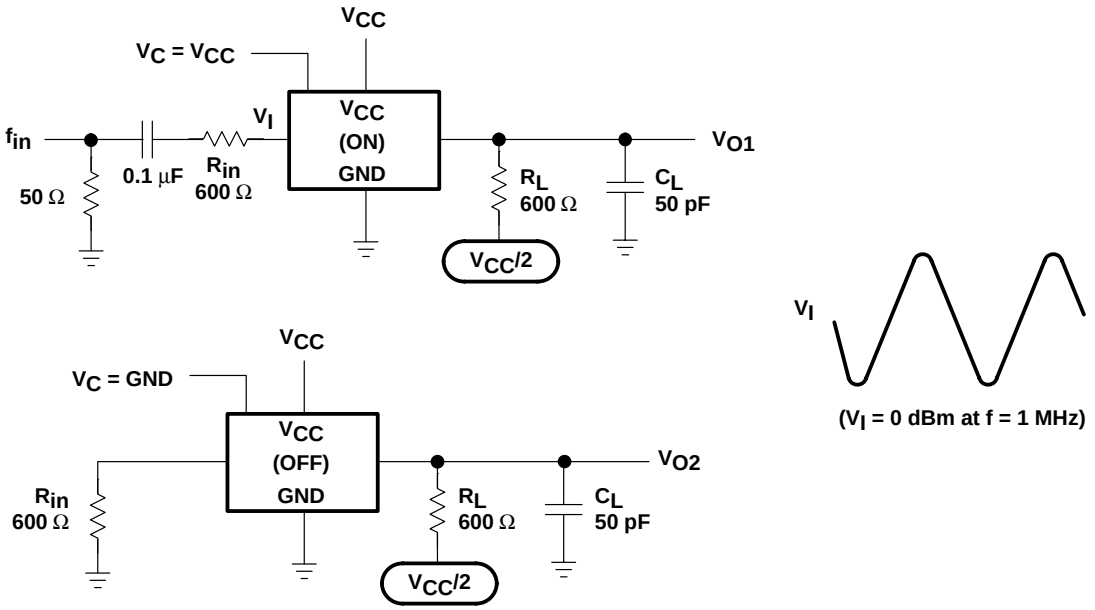

Figure 9. Crosstalk Between Any Two Switches

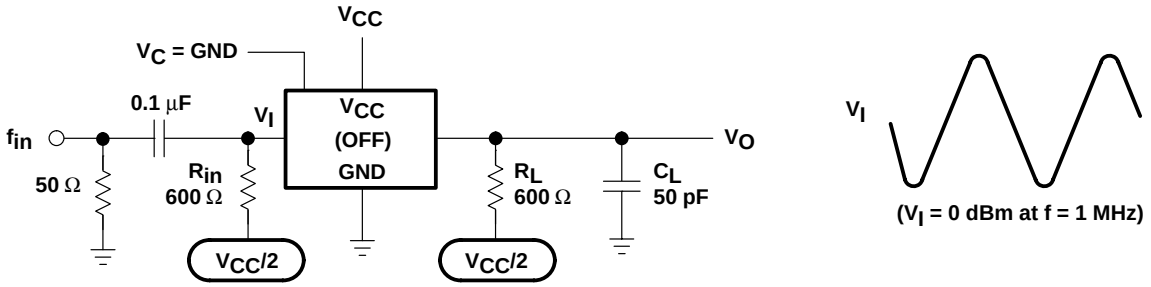

Figure 10. Feed Through, Switch Off

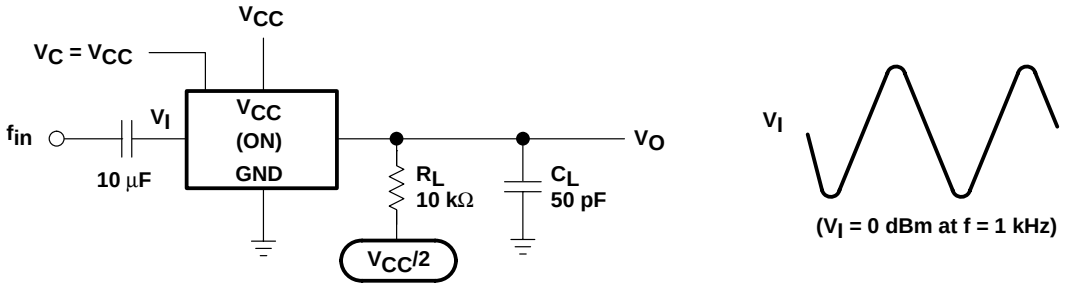

Figure 11. Amplitude-Distortion Rate

PACKAGING INFORMATION

Orderable Device	Status (1)	Package Type	Package Drawing	Pins	Package Qty	Eco Plan (2)	Lead/Ball Finish	MSL Peak Temp (3)
SN74HC4066D	ACTIVE	SOIC	D	14	50	Green (RoHS & no Sb/Br)	CU NIPDAU	Level-1-260C-UNLIM
SN74HC4066DBLE	OBSOLETE	SSOP	DB	14		TBD	Call TI	Call TI
SN74HC4066DBR	ACTIVE	SSOP	DB	14	2000	Green (RoHS & no Sb/Br)	CU NIPDAU	Level-1-260C-UNLIM
SN74HC4066DBRE4	ACTIVE	SSOP	DB	14	2000	Green (RoHS & no Sb/Br)	CU NIPDAU	Level-1-260C-UNLIM
SN74HC4066DBRG4	ACTIVE	SSOP	DB	14	2000	Green (RoHS & no Sb/Br)	CU NIPDAU	Level-1-260C-UNLIM
SN74HC4066DE4	ACTIVE	SOIC	D	14	50	Green (RoHS & no Sb/Br)	CU NIPDAU	Level-1-260C-UNLIM
SN74HC4066DG4	ACTIVE	SOIC	D	14	50	Green (RoHS & no Sb/Br)	CU NIPDAU	Level-1-260C-UNLIM
SN74HC4066DR	ACTIVE	SOIC	D	14	2500	Green (RoHS & no Sb/Br)	CU NIPDAU	Level-1-260C-UNLIM
SN74HC4066DRE4	ACTIVE	SOIC	D	14	2500	Green (RoHS & no Sb/Br)	CU NIPDAU	Level-1-260C-UNLIM
SN74HC4066DRG4	ACTIVE	SOIC	D	14	2500	Green (RoHS & no Sb/Br)	CU NIPDAU	Level-1-260C-UNLIM
SN74HC4066DT	ACTIVE	SOIC	D	14	250	Green (RoHS & no Sb/Br)	CU NIPDAU	Level-1-260C-UNLIM
SN74HC4066DTE4	ACTIVE	SOIC	D	14	250	Green (RoHS & no Sb/Br)	CU NIPDAU	Level-1-260C-UNLIM
SN74HC4066DTG4	ACTIVE	SOIC	D	14	250	Green (RoHS & no Sb/Br)	CU NIPDAU	Level-1-260C-UNLIM
SN74HC4066N	ACTIVE	PDIP	N	14	25	Pb-Free (RoHS)	CU NIPDAU	N / A for Pkg Type
SN74HC4066NE4	ACTIVE	PDIP	N	14	25	Pb-Free (RoHS)	CU NIPDAU	N / A for Pkg Type
SN74HC4066NSR	ACTIVE	SO	NS	14	2000	Green (RoHS & no Sb/Br)	CU NIPDAU	Level-1-260C-UNLIM
SN74HC4066NSRG4	ACTIVE	SO	NS	14	2000	Green (RoHS & no Sb/Br)	CU NIPDAU	Level-1-260C-UNLIM
SN74HC4066PW	ACTIVE	TSSOP	PW	14	90	Green (RoHS & no Sb/Br)	CU NIPDAU	Level-1-260C-UNLIM
SN74HC4066PWE4	ACTIVE	TSSOP	PW	14	90	Green (RoHS & no Sb/Br)	CU NIPDAU	Level-1-260C-UNLIM
SN74HC4066PWG4	ACTIVE	TSSOP	PW	14	90	Green (RoHS & no Sb/Br)	CU NIPDAU	Level-1-260C-UNLIM
SN74HC4066PWLE	OBSOLETE	TSSOP	PW	14		TBD	Call TI	Call TI
SN74HC4066PWR	ACTIVE	TSSOP	PW	14	2000	Green (RoHS & no Sb/Br)	CU NIPDAU	Level-1-260C-UNLIM
SN74HC4066PWRE4	ACTIVE	TSSOP	PW	14	2000	Green (RoHS & no Sb/Br)	CU NIPDAU	Level-1-260C-UNLIM
SN74HC4066PWRG4	ACTIVE	TSSOP	PW	14	2000	Green (RoHS & no Sb/Br)	CU NIPDAU	Level-1-260C-UNLIM
SN74HC4066PWT	ACTIVE	TSSOP	PW	14	250	Green (RoHS & no Sb/Br)	CU NIPDAU	Level-1-260C-UNLIM
SN74HC4066PWTE4	ACTIVE	TSSOP	PW	14	250	Green (RoHS &	CU NIPDAU	Level-1-260C-UNLIM

Orderable Device	Status [1]	Package Type	Package Drawing	Pins	Package Qty	Eco Plan [2]	Lead/Ball Finish	MSL Peak Temp [3]
						no Sb/Br)		
SN74HC4066PWTG4	ACTIVE	TSSOP	PW	14	250	Green (RoHS & no Sb/Br)	CU NIPDAU	Level-1-260C-UNLIM

[1] The marketing status values are defined as follows:
ACTIVE: Product device recommended for new designs.
LIFEBUY: TI has announced that the device will be discontinued, and a lifetime-buy period is in effect.
NRND: Not recommended for new designs. Device is in production to support existing customers, but TI does not recommend using this part in a new design.
PREVIEW: Device has been announced but is not in production. Samples may or may not be available.
OBSOLETE: TI has discontinued the production of the device.

[2] Eco Plan - The planned eco-friendly classification: Pb-Free (RoHS), Pb-Free (RoHS Exempt), or Green (RoHS & no Sb/Br) - please check http://www.ti.com/productcontent for the latest availability information and additional product content details.
TBD: The Pb-Free/Green conversion plan has not been defined.
Pb-Free (RoHS): TI's terms "Lead-Free" or "Pb-Free" mean semiconductor products that are compatible with the current RoHS requirements for all 6 substances, including the requirement that lead not exceed 0.1% by weight in homogeneous materials. Where designed to be soldered at high temperatures, TI Pb-Free products are suitable for use in specified lead-free processes.
Pb-Free (RoHS Exempt): This component has a RoHS exemption for either 1) lead-based flip-chip solder bumps used between the die and package, or 2) lead-based die adhesive used between the die and leadframe. The component is otherwise considered Pb-Free (RoHS compatible) as defined above.
Green (RoHS & no Sb/Br): TI defines "Green" to mean Pb-Free (RoHS compatible), and free of Bromine (Br) and Antimony (Sb) based flame retardants (Br or Sb do not exceed 0.1% by weight in homogeneous material)

[3] MSL, Peak Temp. -- The Moisture Sensitivity Level rating according to the JEDEC industry standard classifications, and peak solder temperature.

Important Information and Disclaimer: The information provided on this page represents TI's knowledge and belief as of the date that it is provided. TI bases its knowledge and belief on information provided by third parties, and makes no representation or warranty as to the accuracy of such information. Efforts are underway to better integrate information from third parties. TI has taken and continues to take reasonable steps to provide representative and accurate information but may not have conducted destructive testing or chemical analysis on incoming materials and chemicals. TI and TI suppliers consider certain information to be proprietary, and thus CAS numbers and other limited information may not be available for release.

In no event shall TI's liability arising out of such information exceed the total purchase price of the TI part(s) at issue in this document sold by TI to Customer on an annual basis.

TAPE AND REEL INFORMATION

REEL DIMENSIONS

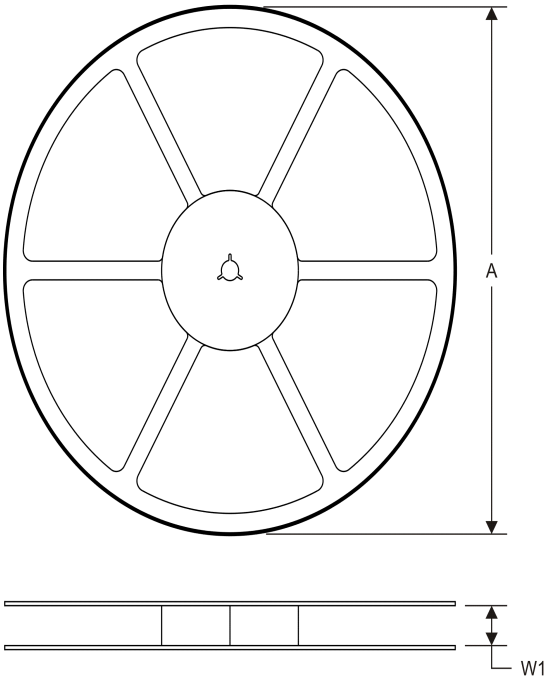

TAPE DIMENSIONS

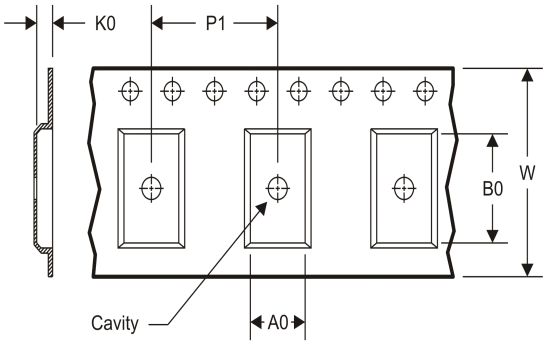

A0	Dimension designed to accommodate the component width
B0	Dimension designed to accommodate the component length
K0	Dimension designed to accommodate the component thickness
W	Overall width of the carrier tape
P1	Pitch between successive cavity centers

TAPE AND REEL INFORMATION

*All dimensions are nominal

Device	Package Type	Package Drawing	Pins	SPQ	Reel Diameter (mm)	Reel Width W1 (mm)	A0 (mm)	B0 (mm)	K0 (mm)	P1 (mm)	W (mm)	Pin1 Quadrant
SN74HC4066DBR	SSOP	DB	14	2000	330.0	16.4	8.2	6.6	2.5	12.0	16.0	Q1
SN74HC4066DR	SOIC	D	14	2500	330.0	16.4	6.5	9.0	2.1	8.0	16.0	Q1
SN74HC4066DT	SOIC	D	14	250	330.0	16.4	6.5	9.0	2.1	8.0	16.0	Q1
SN74HC4066NSR	SO	NS	14	2000	330.0	16.4	8.2	10.5	2.5	12.0	16.0	Q1
SN74HC4066PWR	TSSOP	PW	14	2000	330.0	12.4	6.9	5.6	1.6	8.0	12.0	Q1
SN74HC4066PWT	TSSOP	PW	14	250	330.0	12.4	6.9	5.6	1.6	8.0	12.0	Q1

TAPE AND REEL BOX DIMENSIONS

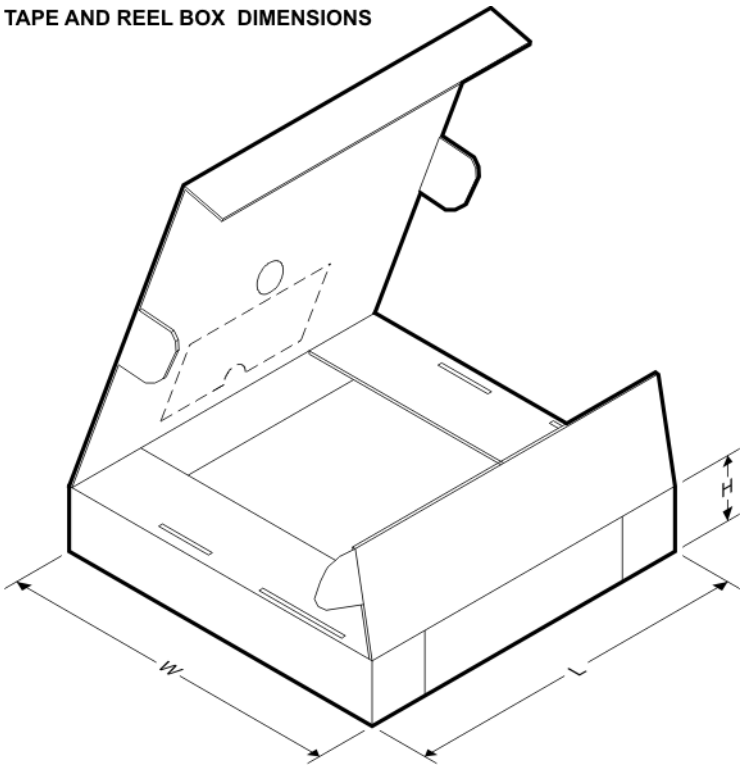

*All dimensions are nominal

Device	Package Type	Package Drawing	Pins	SPQ	Length (mm)	Width (mm)	Height (mm)
SN74HC4066DBR	SSOP	DB	14	2000	367.0	367.0	38.0
SN74HC4066DR	SOIC	D	14	2500	367.0	367.0	38.0
SN74HC4066DT	SOIC	D	14	250	367.0	367.0	38.0
SN74HC4066NSR	SO	NS	14	2000	367.0	367.0	38.0
SN74HC4066PWR	TSSOP	PW	14	2000	367.0	367.0	35.0
SN74HC4066PWT	TSSOP	PW	14	250	367.0	367.0	35.0

N (R–PDIP–T**) PLASTIC DUAL–IN–LINE PACKAGE

16 PINS SHOWN

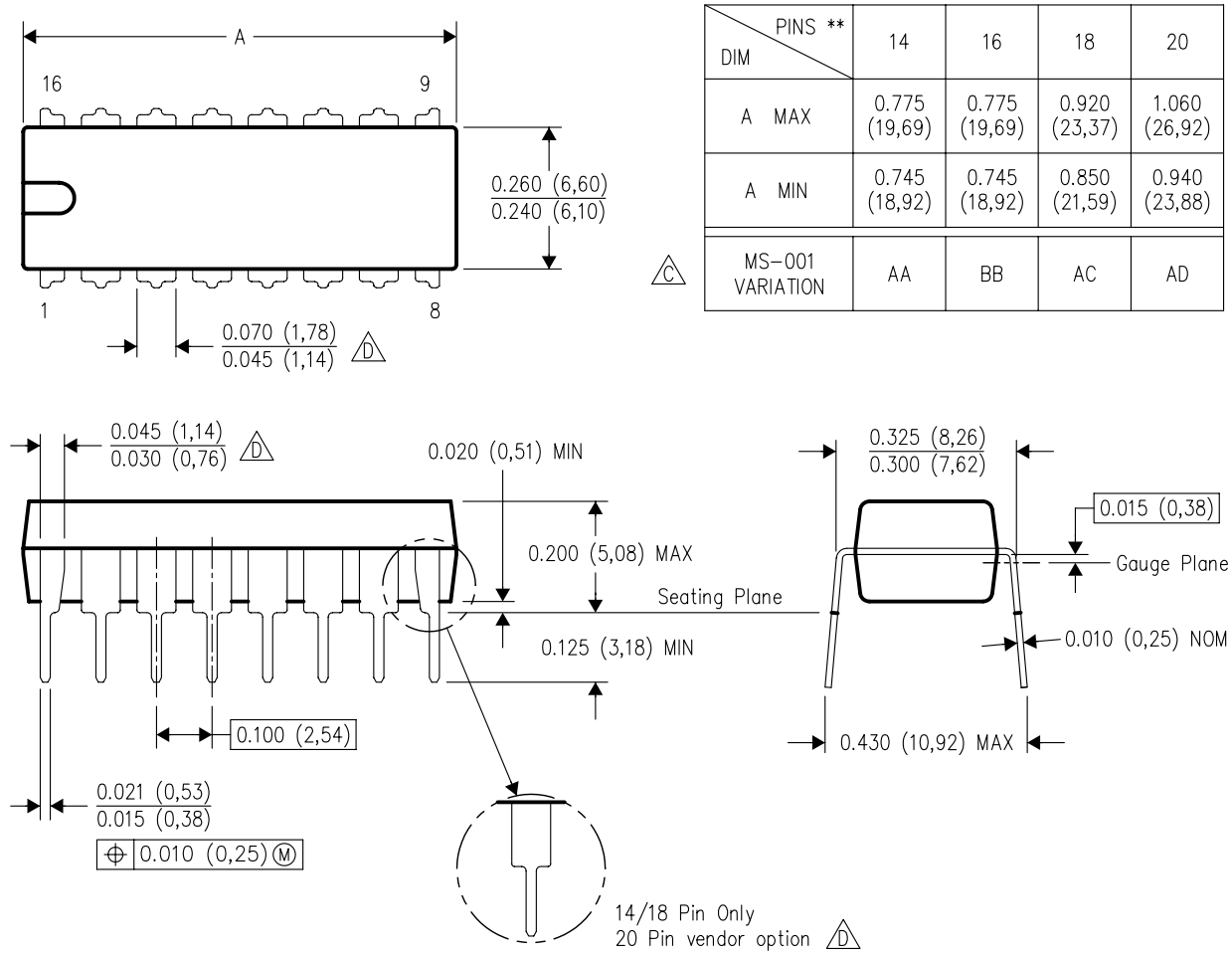

DIM \ PINS **	14	16	18	20
A MAX	0.775 (19,69)	0.775 (19,69)	0.920 (23,37)	1.060 (26,92)
A MIN	0.745 (18,92)	0.745 (18,92)	0.850 (21,59)	0.940 (23,88)
MS–001 VARIATION (C)	AA	BB	AC	AD

NOTES:
A. All linear dimensions are in inches (millimeters).
B. This drawing is subject to change without notice.
C. Falls within JEDEC MS–001, except 18 and 20 pin minimum body length (Dim A).
D. The 20 pin end lead shoulder width is a vendor option, either half or full width.

D (R–PDSO–G14) PLASTIC SMALL OUTLINE

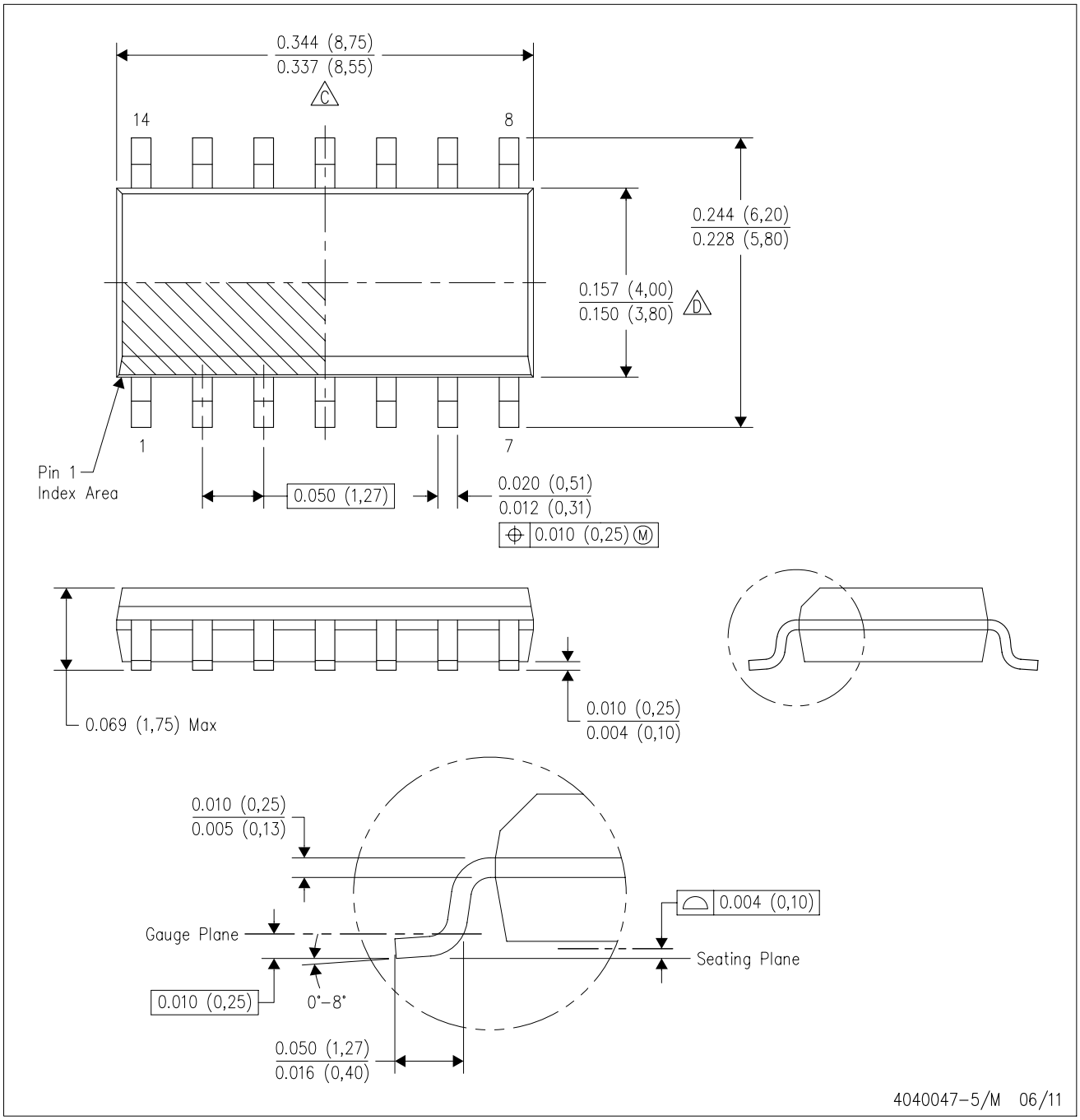

NOTES:
A. All linear dimensions are in inches (millimeters).
B. This drawing is subject to change without notice.
C. Body length does not include mold flash, protrusions, or gate burrs. Mold flash, protrusions, or gate burrs shall not exceed 0.006 (0,15) each side.
D. Body width does not include interlead flash. Interlead flash shall not exceed 0.017 (0,43) each side.
E. Reference JEDEC MS–012 variation AB.

D (R–PDSO–G14) PLASTIC SMALL OUTLINE

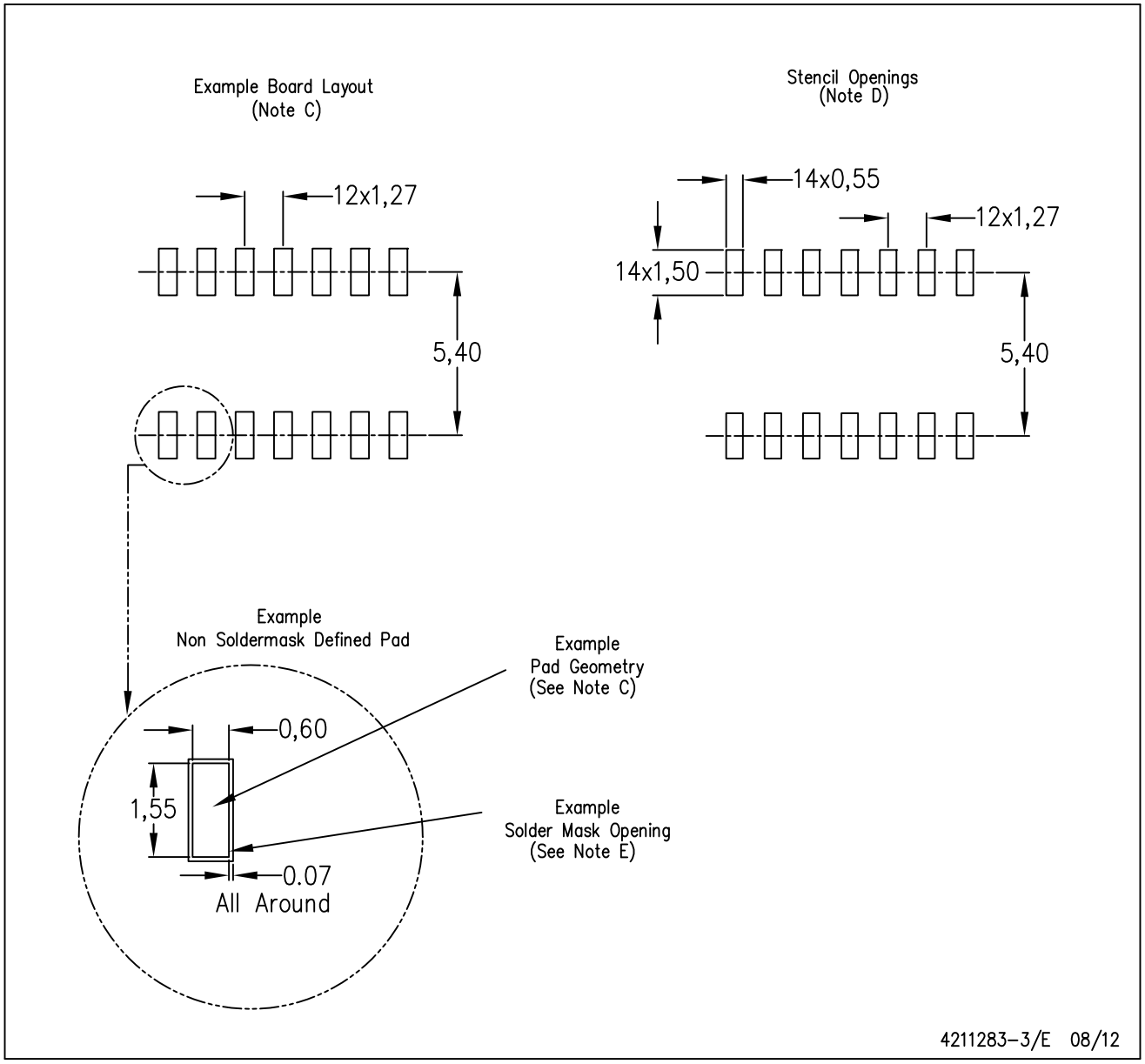

NOTES:
A. All linear dimensions are in millimeters.
B. This drawing is subject to change without notice.
C. Publication IPC–7351 is recommended for alternate designs.
D. Laser cutting apertures with trapezoidal walls and also rounding corners will offer better paste release. Customers should contact their board assembly site for stencil design recommendations. Refer to IPC–7525 for other stencil recommendations.
E. Customers should contact their board fabrication site for solder mask tolerances between and around signal pads.

PW (R–PDSO–G14) PLASTIC SMALL OUTLINE

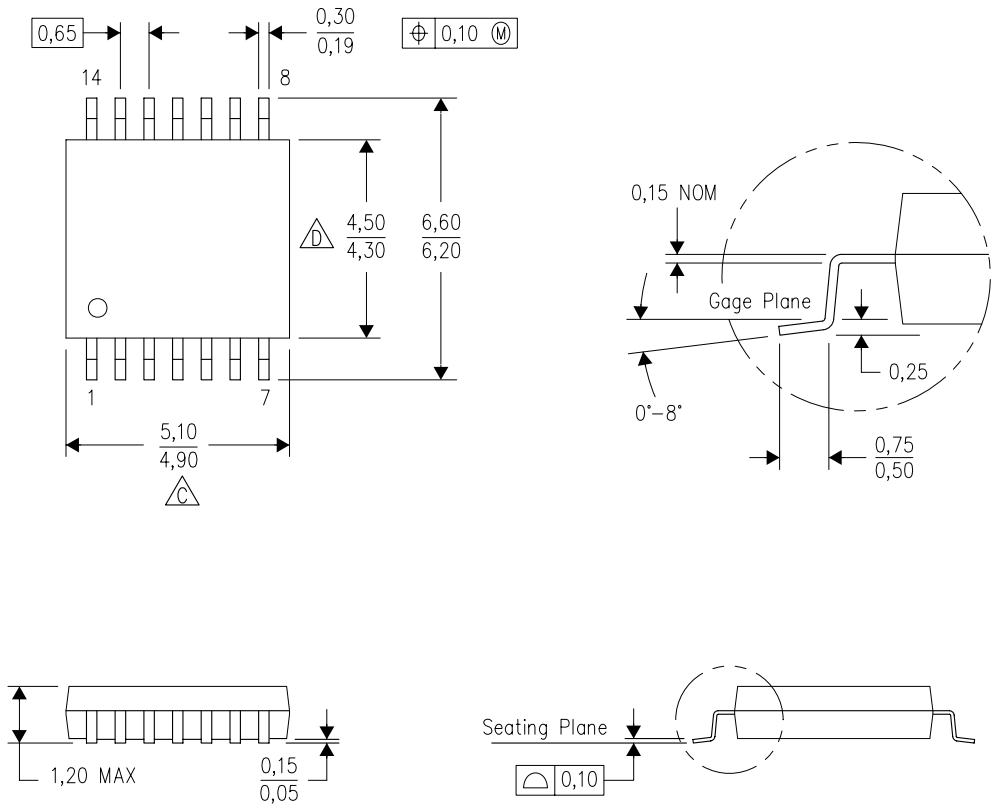

NOTES:
A. All linear dimensions are in millimeters. Dimensioning and tolerancing per ASME Y14.5M–1994.
B. This drawing is subject to change without notice.
C. Body length does not include mold flash, protrusions, or gate burrs. Mold flash, protrusions, or gate burrs shall not exceed 0,15 each side.
D. Body width does not include interlead flash. Interlead flash shall not exceed 0,25 each side.
E. Falls within JEDEC MO–153

PW (R–PDSO–G14) PLASTIC SMALL OUTLINE

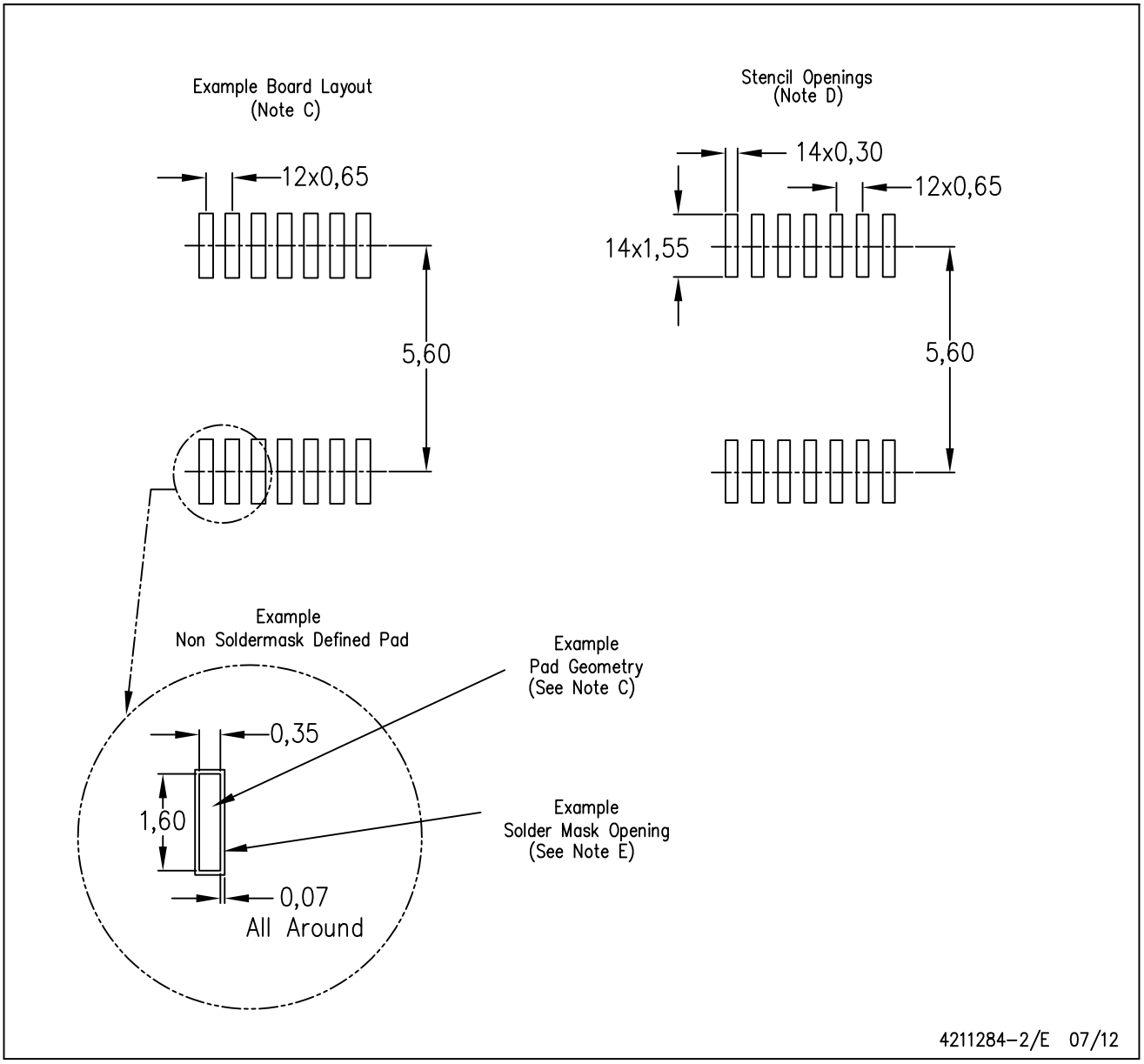

NOTES:
A. All linear dimensions are in millimeters.
B. This drawing is subject to change without notice.
C. Publication IPC–7351 is recommended for alternate designs.
D. Laser cutting apertures with trapezoidal walls and also rounding corners will offer better paste release. Customers should contact their board assembly site for stencil design recommendations. Refer to IPC–7525 for other stencil recommendations.
E. Customers should contact their board fabrication site for solder mask tolerances between and around signal pads.

MECHANICAL DATA

NS (R-PDSO-G)** **PLASTIC SMALL-OUTLINE PACKAGE**

14-PINS SHOWN

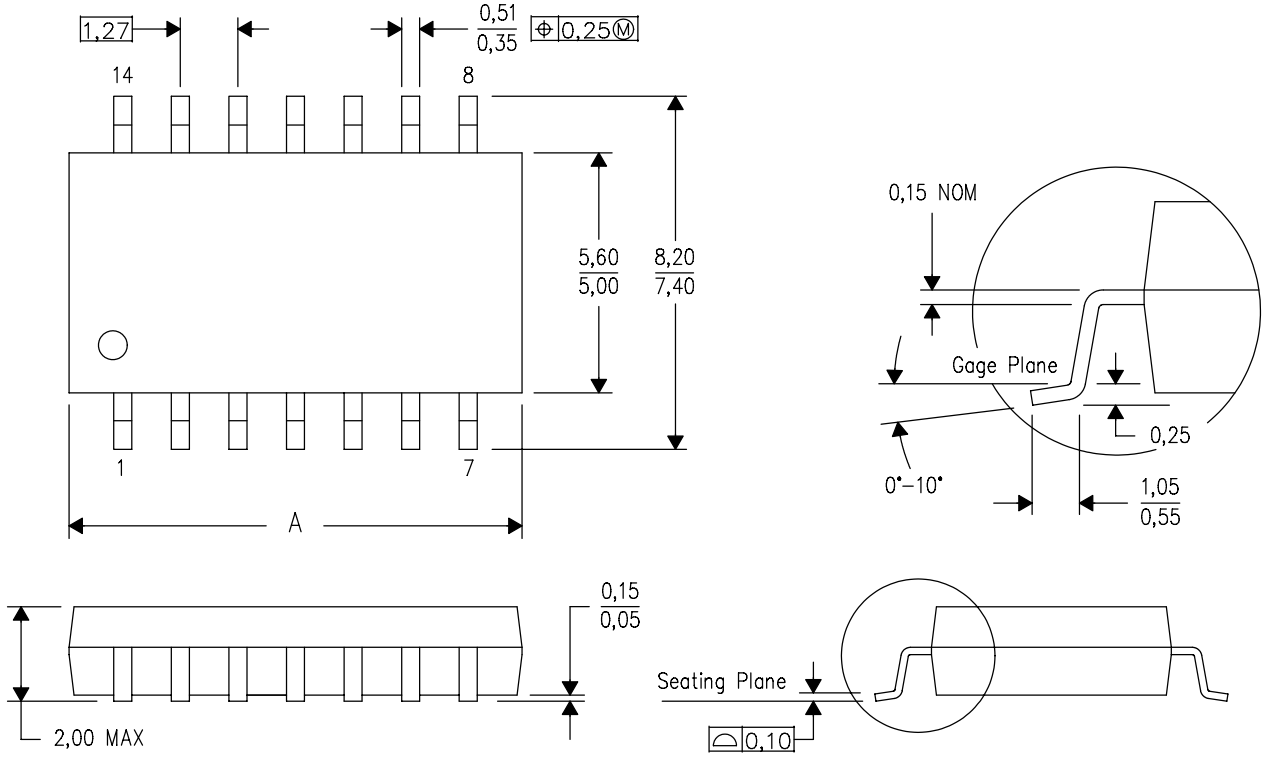

DIM \ PINS **	14	16	20	24
A MAX	10,50	10,50	12,90	15,30
A MIN	9,90	9,90	12,30	14,70

4040062/C 03/03

NOTES:
A. All linear dimensions are in millimeters.
B. This drawing is subject to change without notice.
C. Body dimensions do not include mold flash or protrusion, not to exceed 0,15.

DB (R-PDSO-G)** **PLASTIC SMALL-OUTLINE**

28 PINS SHOWN

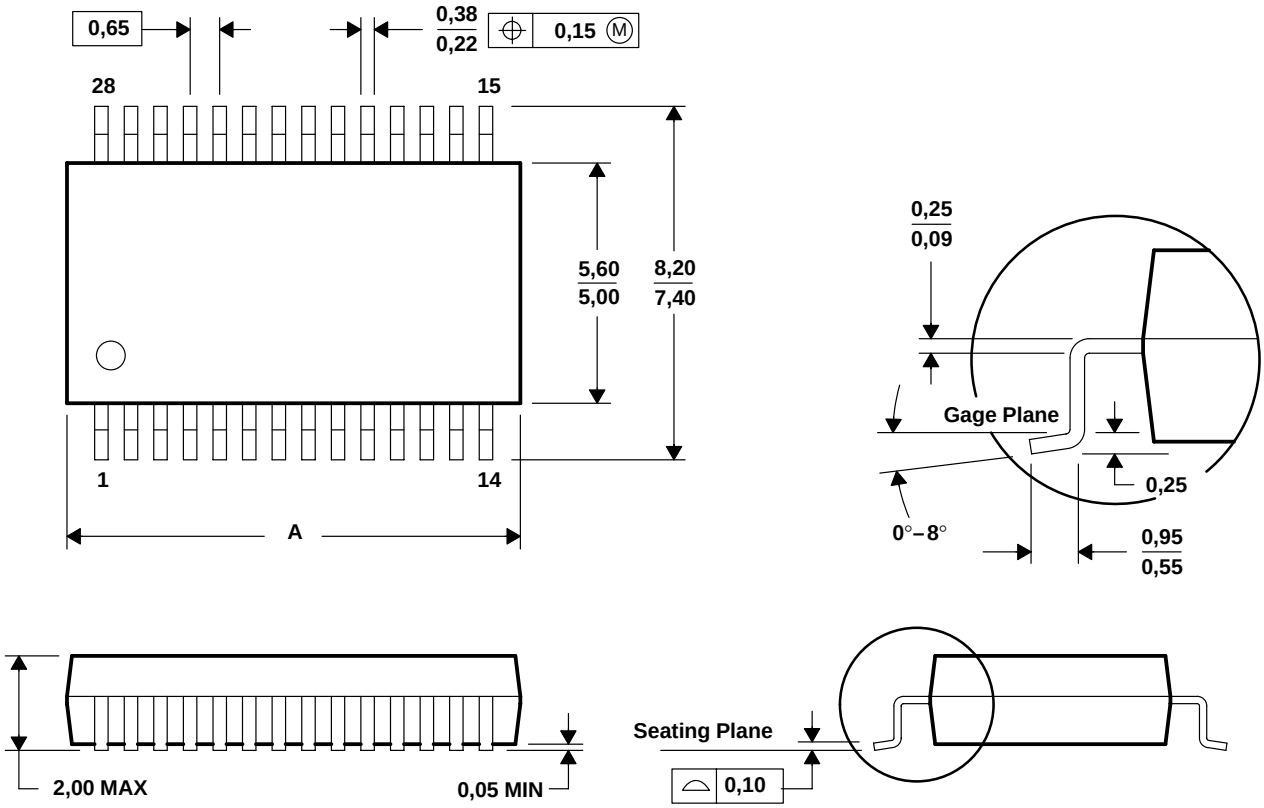

DIM \ PINS **	14	16	20	24	28	30	38
A MAX	6,50	6,50	7,50	8,50	10,50	10,50	12,90
A MIN	5,90	5,90	6,90	7,90	9,90	9,90	12,30

4040065 /E 12/01

NOTES: A. All linear dimensions are in millimeters.
B. This drawing is subject to change without notice.
C. Body dimensions do not include mold flash or protrusion not to exceed 0,15.
D. Falls within JEDEC MO-150

IMPORTANT NOTICE

Texas Instruments Incorporated and its subsidiaries (TI) reserve the right to make corrections, enhancements, improvements and other changes to its semiconductor products and services per JESD46, latest issue, and to discontinue any product or service per JESD48, latest issue. Buyers should obtain the latest relevant information before placing orders and should verify that such information is current and complete. All semiconductor products (also referred to herein as “components”) are sold subject to TI’s terms and conditions of sale supplied at the time of order acknowledgment.

TI warrants performance of its components to the specifications applicable at the time of sale, in accordance with the warranty in TI’s terms and conditions of sale of semiconductor products. Testing and other quality control techniques are used to the extent TI deems necessary to support this warranty. Except where mandated by applicable law, testing of all parameters of each component is not necessarily performed.

TI assumes no liability for applications assistance or the design of Buyers’ products. Buyers are responsible for their products and applications using TI components. To minimize the risks associated with Buyers’ products and applications, Buyers should provide adequate design and operating safeguards.

TI does not warrant or represent that any license, either express or implied, is granted under any patent right, copyright, mask work right, or other intellectual property right relating to any combination, machine, or process in which TI components or services are used. Information published by TI regarding third-party products or services does not constitute a license to use such products or services or a warranty or endorsement thereof. Use of such information may require a license from a third party under the patents or other intellectual property of the third party, or a license from TI under the patents or other intellectual property of TI.

Reproduction of significant portions of TI information in TI data books or data sheets is permissible only if reproduction is without alteration and is accompanied by all associated warranties, conditions, limitations, and notices. TI is not responsible or liable for such altered documentation. Information of third parties may be subject to additional restrictions.

Resale of TI components or services with statements different from or beyond the parameters stated by TI for that component or service voids all express and any implied warranties for the associated TI component or service and is an unfair and deceptive business practice. TI is not responsible or liable for any such statements.

Buyer acknowledges and agrees that it is solely responsible for compliance with all legal, regulatory and safety-related requirements concerning its products, and any use of TI components in its applications, notwithstanding any applications-related information or support that may be provided by TI. Buyer represents and agrees that it has all the necessary expertise to create and implement safeguards which anticipate dangerous consequences of failures, monitor failures and their consequences, lessen the likelihood of failures that might cause harm and take appropriate remedial actions. Buyer will fully indemnify TI and its representatives against any damages arising out of the use of any TI components in safety-critical applications.

In some cases, TI components may be promoted specifically to facilitate safety-related applications. With such components, TI’s goal is to help enable customers to design and create their own end-product solutions that meet applicable functional safety standards and requirements. Nonetheless, such components are subject to these terms.

No TI components are authorized for use in FDA Class III (or similar life-critical medical equipment) unless authorized officers of the parties have executed a special agreement specifically governing such use.

Only those TI components which TI has specifically designated as military grade or “enhanced plastic” are designed and intended for use in military/aerospace applications or environments. Buyer acknowledges and agrees that any military or aerospace use of TI components which have ***not*** been so designated is solely at the Buyer's risk, and that Buyer is solely responsible for compliance with all legal and regulatory requirements in connection with such use.

TI has specifically designated certain components which meet ISO/TS16949 requirements, mainly for automotive use. Components which have not been so designated are neither designed nor intended for automotive use; and TI will not be responsible for any failure of such components to meet such requirements.

Products		**Applications**	
Audio	www.ti.com/audio	Automotive and Transportation	www.ti.com/automotive
Amplifiers	amplifier.ti.com	Communications and Telecom	www.ti.com/communications
Data Converters	dataconverter.ti.com	Computers and Peripherals	www.ti.com/computers
DLP® Products	www.dlp.com	Consumer Electronics	www.ti.com/consumer-apps
DSP	dsp.ti.com	Energy and Lighting	www.ti.com/energy
Clocks and Timers	www.ti.com/clocks	Industrial	www.ti.com/industrial
Interface	interface.ti.com	Medical	www.ti.com/medical
Logic	logic.ti.com	Security	www.ti.com/security
Power Mgmt	power.ti.com	Space, Avionics and Defense	www.ti.com/space-avionics-defense
Microcontrollers	microcontroller.ti.com	Video and Imaging	www.ti.com/video
RFID	www.ti-rfid.com		
OMAP Applications Processors	www.ti.com/omap	**TI E2E Community**	e2e.ti.com
Wireless Connectivity	www.ti.com/wirelessconnectivity		

Mailing Address: Texas Instruments, Post Office Box 655303, Dallas, Texas 75265
Copyright © 2012, Texas Instruments Incorporated