D2684, DECEMBER 1982 – REVISED SEPTEMBER 1987

- **High-Current 3-State Outputs Interface Directly with System Bus or Can Drive Up to 15 LSTTL Loads**
- **Gated Output-Control Lines for Enabling or Disabling the Outputs**
- **Fully Independent Clock Virtually Eliminates Restrictions for Operating in One of Two Modes**
- **Package Options Include Plastic "Small Outline" Packages, Ceramic Chip Carriers, and Standard Plastic and Ceramic 300-mil DIPs**
- **Dependable Texas Instruments Quality and Reliability**

SN54HC173 . . . J PACKAGE
SN74HC173 . . . D OR N PACKAGE
(TOP VIEW)

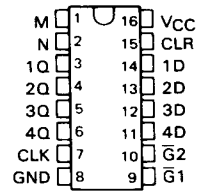

SN54HC173 . . . FK PACKAGE
(TOP VIEW)

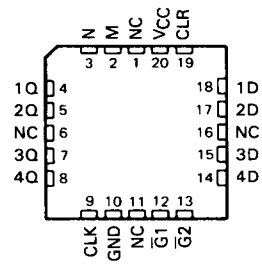

NC – No internal connection

description

The 'HC173 4-bit registers include D-type flip-flops featuring totem-pole 3-state outputs capable of driving highly capacitive or relatively low-impedance loads. The high-impedence third state and increased drive provide these flip-flops with the capability of being connected directly to and driving the lines in a bus-organized system without need for interface or pull-up components.

Gated enable inputs are provided on these devices for controlling the entry of data into the flip-flops. When both data-enable inputs are low, data at the D inputs are loaded into their respective flip-flops on the next positive transition of the clock input. Gate output-control inputs are also provided. When both are low, the normal logic states (high or low levels) of the four outputs are available for driving the loads or bus lines. The outputs are disabled independently from the level of the clock by a high logic level at either output-control input. The outputs then present a high impedance and neither load nor drive the bus line. Detailed operation is given in the function table.

The SN54HC173 is characterized for operation over the full military temperature range of −55°C to 125°C. The SN74HC173 is characterized for operation from −40°C to 85°C.

FUNCTION TABLE

INPUTS					OUTPUT
CLEAR	CLOCK	DATA ENABLE		DATA	Q
		$\overline{G1}$	$\overline{G2}$	D	
H	X	X	X	X	L
L	L	X	X	X	Q_0
L	↑	H	X	X	Q_0
L	↑	X	H	X	Q_0
L	↑	L	L	L	L
L	↑	L	L	H	H

When either M or N (or both) is (are) high, the output is disabled to the high-impedence state; however, sequential operation of the flip-flops is not affected.

logic symbol†

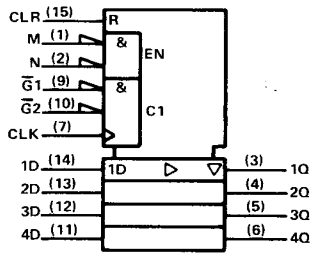

†This symbol is in accordance with ANSI/IEEE Std 91-1984 and IEC Publication 617-12.

logic diagram (positive logic)

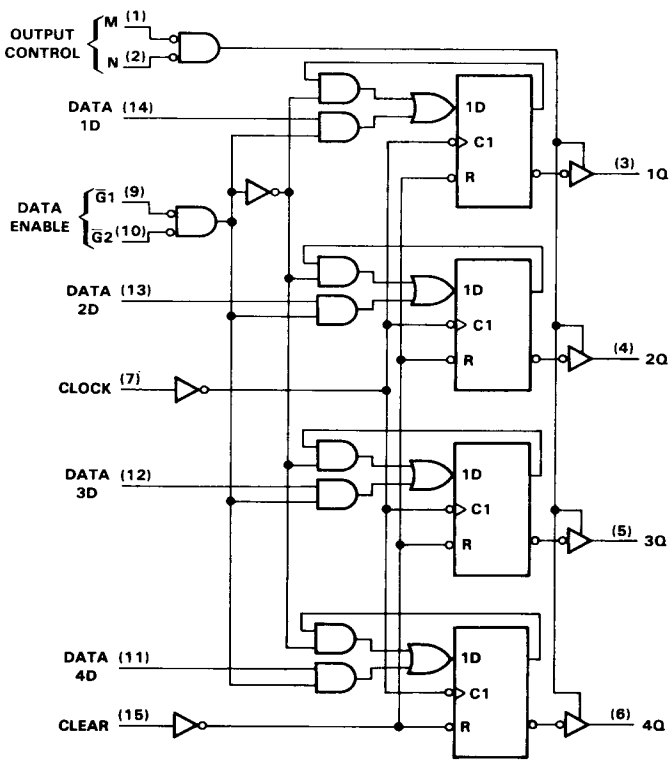

Pin numbers shown are for D, J, and N packages.

absolute maximum ratings over operating free-air temperature range†

Supply voltage, V_{CC} . . . . . −0.5 V to 7 V
Input clamp current, I_{IK}(V_I < 0 or V_I > V_{CC}) . . . . . ±20 mA
Output clamp current, I_{OK}(V_O < 0 or V_O > V_{CC}) . . . . . ±20 mA
Continuous output current, I_O (V_O = 0 to V_{CC}) . . . . . ±25 mA
Continuous current through V_{CC} or GND pins . . . . . ±50 mA
Lead temperature 1,6 mm (1/16 in) from case for 60 s: FK or J package . . . . . 300°C
Lead temperature 1,6 mm (1/16 in) from case for 10 s: D or N package . . . . . 260°C
Storage temperature range . . . . . −65°C to 150°C

†Stresses beyond those listed under "absolute maximum ratings" may cause permanent damage to the device. These are stress ratings only, and functional operation of the device at these or any other conditions beyond those indicated under "recommended operating contitions" is not implied. Exposure to absolute-maximum-rated conditions for extended periods may affect device reliability.

recommended operating conditions

			SN54HC173			SN74HC173			UNIT
			MIN	NOM	MAX	MIN	NOM	MAX	
V_{CC}	Supply voltage		2	5	6	2	5	6	V
V_{IH}	High-level input voltage	V_{CC} = 2 V	1.5			1.5			V
		V_{CC} = 4.5 V	3.15			3.15			
		V_{CC} = 6 V	4.2			4.2			
V_{IL}	Low-level input voltage	V_{CC} = 2 V	0		0.3	0		0.3	V
		V_{CC} = 4.5 V	0		0.9	0		0.9	
		V_{CC} = 6 V	0		1.2	0		1.2	
V_I	Input voltage		0		V_{CC}	0		V_{CC}	V
V_O	Output voltage		0		V_{CC}	0		V_{CC}	V
t_t	Input transition (rise and fall) times	V_{CC} = 2 V	0		1000	0		1000	ns
		V_{CC} = 4.5 V	0		500	0		500	
		V_{CC} = 6 V	0		400	0		400	
T_A	Operating free-air temperature		−55		125	−40		85	°C

electrical characteristics over recommended operating free-air temperature range (unless otherwise noted)

PARAMETER	TEST CONDITIONS	V_{CC}	T_A = 25°C			SN54HC173		SN74HC173		UNIT
			MIN	TYP	MAX	MIN	MAX	MIN	MAX	
V_{OH}	V_I = V_{IH} or V_{IL}, I_{OH} = −20 μA	2 V	1.9	1.998		1.9		1.9		V
		4.5 V	4.4	4.499		4.4		4.4		
		6 V	5.9	5.999		5.9		5.9		
	V_I = V_{IH} or V_{IL}, I_{OH} = −6 mA	4.5 V	3.98	4.30		3.7		3.84		
	V_I = V_{IH} or V_{IL}, I_{OH} = −7.8 mA	6 V	5.48	5.80		5.2		5.34		
V_{OL}	V_I = V_{IH} or V_{IL}, I_{OL} = 20 μA	2 V		0.002	0.1		0.1		0.1	V
		4.5 V		0.001	0.1		0.1		0.1	
		6 V		0.001	0.1		0.1		0.1	
	V_I = V_{IH} or V_{IL}, I_{OL} = 6 mA	4.5 V		0.17	0.26		0.4		0.33	
	V_I = V_{IH} or V_{IL}, I_{OL} = 7.8 mA	6 V		0.15	0.26		0.4		0.33	
I_I	V_I = V_{CC} or 0	6 V		±0.1	±100		±1000		±1000	nA
I_{OZ}	V_O = V_{CC} or 0	6 V		±0.01	±0.5		±10		±5	μA
I_{CC}	V_I = V_{CC} or 0, I_O = 0	6 V			8		160		80	μA
C_i		2 to 6 V		3	10		10		10	pF

timing requirements over recommended operating free-air temperature range (unless otherwise noted)

			V_{CC}	T_A = 25°C		SN54HC173		SN74HC173		UNIT
				MIN	MAX	MIN	MAX	MIN	MAX	
f_{clock}	Input clock frequency		2 V	0	6	0	4.2	0	5	MHz
			4.5 V	0	31	0	21	0	25	
			6 V	0	36	0	25	0	29	
t_w	Pulse duration	CLK high or low	2 V	80		120		100		ns
			4.5 V	16		24		20		
			6 V	14		20		17		
		CLR high	2 V	80		120		100		ns
			4.5 V	16		24		20		
			6 V	14		20		17		
t_{su}	Setup time before CLK↑	$\overline{G}1$ and $\overline{G}2$	2 V	100		150		125		ns
			4.5 V	20		30		25		
			6 V	17		25		21		
		Data	2 V	100		150		125		ns
			4.5 V	20		30		25		
			6 V	17		25		21		
		CLR inactive	2 V	90		135		115		ns
			4.5 V	18		27		23		
			6 V	15		23		19		
t_h	Hold time after CLK↑	$\overline{G}1$ and $\overline{G}2$	2 V	0		0		0		ns
			4.5 V	0		0		0		
			6 V	0		0		0		
		Data	2 V	0		0		0		ns
			4.5 V	0		0		0		
			6 V	0		0		0		

TEXAS INSTRUMENTS
POST OFFICE BOX 655012 • DALLAS, TEXAS 75265

switching characteristics over recommended operating free-air temperature range (unless otherwise noted), C_L = 50 pF (see Note 1)

PARAMETER	FROM (INPUT)	TO (OUTPUT)	V_{CC}	T_A = 25°C			SN54HC173		SN74HC173		UNIT
				MIN	TYP	MAX	MIN	MAX	MIN	MAX	
f_{max}			2 V	6	8		4.2		5		MHz
			4.5 V	31	46		21		25		
			6 V	36	55		25		29		
t_{PHL}	CLR	Any	2 V		78	150		225		190	ns
			4.5 V		21	30		45		38	
			6 V		20	26		38		32	
t_{pd}	CLK	Any	2 V		78	150		225		190	ns
			4.5 V		21	30		45		38	
			6 V		20	26		38		32	
t_{en}	M or N	Any	2 V		78	150		225		190	ns
			4.5 V		20	30		45		38	
			6 V		15	26		38		32	
t_{dis}	M or N	Any	2 V		40	150		225		190	ns
			4.5 V		18	30		45		38	
			6 V		16	26		38		32	
t_t		Any	2 V		20	60		90		75	ns
			4.5 V		8	12		18		15	
			6 V		6	10		15		13	

C_{pd}	Power dissipation capacitance	No load, T_A = 25°C	29 pF typ

switching characteristics over recommended operating free-air temperature range (unless otherwise noted), C_L = 150 pF (see Note 1)

PARAMETER	FROM (INPUT)	TO (OUTPUT)	V_{CC}	T_A = 25°C			SN54HC173		SN74HC173		UNIT
				MIN	TYP	MAX	MIN	MAX	MIN	MAX	
t_{PHL}	CLR	Any	2 V		100	200		300		250	ns
			4.5 V		28	40		60		50	
			6 V		21	34		51		43	
t_{pd}	CLR	Any	2 V		100	200		300		250	ns
			4.5 V		28	40		60		50	
			6 V		21	34		51		43	
t_{en}	M or N	Any	2 V		100	200		300		250	ns
			4.5 V		28	40		60		50	
			6 V		21	34		51		43	
t_t		Any	2 V		45	210		315		265	ns
			4.5 V		17	42		63		53	
			6 V		13	36		53		45	

NOTE 1: Load circuit and voltage waveforms are shown in Section 1.