PRELIMINARY DATA SHEET

NEC

OCMOS FET™

PS7241S-1A

CURRENT LIMIT TYPE
4-PIN SOP 400 V OCMOS FET
(1-ch OCMOS FET)

DESCRIPTION

The PS7241S-1A is a solid state relay containing GaAs LEDs on the light emitting side (input side) and MOS FETs including current control circuit on the output side. Current control circuit of OCMOS FET protects this device from thermal breakdown and output circuit.

It is suitable for analog signal control because of its low offset and high linearity.

FEATURES

- Shut down type circuit
- ★ Limit current (I_{LMT} = 155 to 210 mA)
- Small and thin package (4-pin SOP, Height = 2.1 mm)
- 1 channel type (1 a output)
- Low LED operating current (I_F = 2 mA)
- Designed for AC/DC switching line changer
- Low offset voltage
- Ordering number of taping product: PS7241S-1A-E3, E4, F3, F4
- ★ UL approved: File No. E72422 (S)

APPLICATIONS

- Note PC, PDA
- Modem card
- Telephone, FAX
- Measurement equipment

Document No. P13922EJ2V0DS00 (2nd edition)
Date Published July 1999 NS CP(K)
Printed in Japan

The mark ★ shows major revised points.

★ **PACKAGE DIMENSIONS**
in millimeters

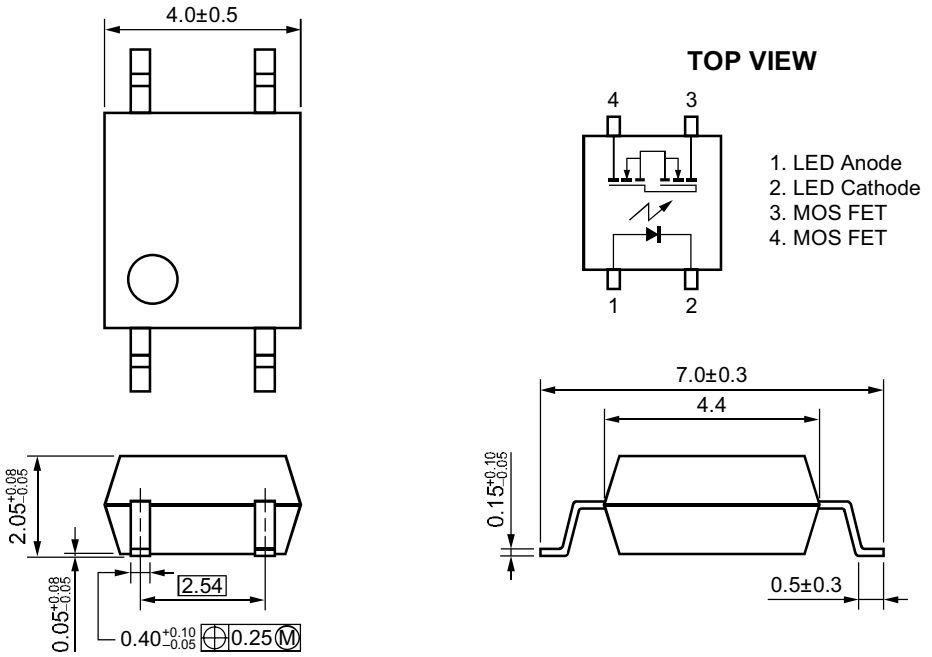

ABSOLUTE MAXIMUM RATINGS (T_A = 25 °C, unless otherwise specified)

Parameter		Symbol	Ratings	Unit
Diode	Forward Current (DC)	I_F	50	mA
	Reverse Voltage	V_R	5.0	V
	Power Dissipation	P_D	50	mW
	Peak Forward Current *1	I_{FP}	1	A
MOS FET	Break Down Voltage	V_L	400	V
	Continuous Load Current	I_L	120	mA
	Pulse Load Current *2 (AC/DC Connection)	I_{LP}	120	mA
	Power Dissipation	P_D	300	mW
Isolation Voltage *3		BV	1 500	Vr.m.s.
Total Power Dissipation		P_T	350	mW
Operating Ambient Temperature		T_A	–40 to +80	°C
Storage Temperature		T_{stg}	–40 to +100	°C

***1** PW = 100 μs, Duty Cycle = 1 %

***2** PW = 100 ms, 1 shot

***3** AC voltage for 1 minute at T_A = 25 °C, RH = 60 % between input and output

RECOMMENDED OPERATING CONDITIONS (T_A = 25 °C)

Parameter	Symbol	MIN.	TYP.	MAX.	Unit
LED Operating Current	I_F	2	10	20	mA
LED Off Voltage	V_F	0		0.5	V

ELECTRICAL CHARACTERISTICS (T_A = 25 °C)

Parameter		Symbol	Conditions	MIN.	TYP.	MAX.	Unit
Diode	Forward Voltage	V_F	I_F = 10 mA		1.2	1.4	V
	Reverse Current	I_R	V_R = 5 V			5.0	μA
MOS FET	Off-state Leakage Current	I_{Loff}	V_D = 400 V			1	μA
	Output Capacitance	C_{out}	V_D = 0 V, f = 1 MHz		65		pF
Coupled	LED On-state Current	I_{Fon}	I_L = 120 mA			2	mA
	On-state Resistance	R_{on1}	I_F = 10 mA, I_L = 10 mA		28	35	Ω
		R_{on2}	I_F = 10 mA, I_L = 120 mA		24	30	
	Turn-on Time*1	t_{on}	I_F = 10 mA, V_O = 5 V,		0.5	2.0	ms
	Turn-off Time*1	t_{off}	PW ≥ 10 ms		0.07	0.2	
	Isolation Resistance	R_{I-O}	V_{I-O} = 1.0 kV_{DC}	10^9			Ω
	Isolation Capacitance	C_{I-O}	V = 0 V, f = 1 MHz		0.5		pF
★	Limit Current	I_{LMT}	I_F = 10 mA, V_L = 6 V, t = 5 ms	155	180	210	mA

★ ***1** Test Circuit for Switching Time

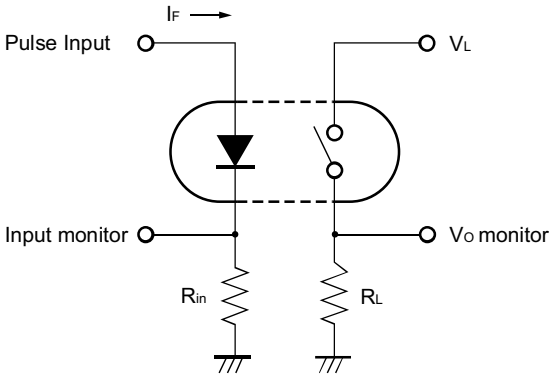

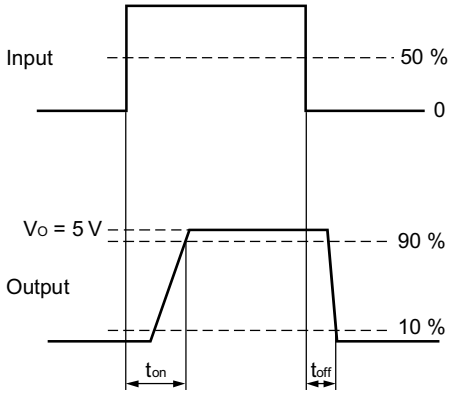

CAUTION

Within this device there exists GaAs (Gallium Arsenide) material which is a harmful substance if ingested. Please do not under any circumstances break the hermetic seal.

OCMOS FET is a trademark of NEC Corporation.