PF08123B

MOS FET Power Amplifier Module
for E-GSM and DCS1800/1900 Triple Band Handy Phone

HITACHI

ADE-208-1401B (Z)
Target Specifications
3rd Edition
Feb. 2001

Application

- Triple band amplifier for E-GSM (880 MHz to 915 MHz) and DCS1800/1900 (1710 MHz to 1785 MHz, 1850 MHz to 1910 MHz).
- For 3.5 V & GPRS Class12 operation compatible

Features

- All in one including output matching circuit
- Simple external circuit
- One power control pin with one band switch
- High gain 3stage amplifier : 0 dBm input Typ
- Lead less thin & Small package : 8 × 13.75 × 1.6 mm Typ
- High efficiency : (55)% Typ at 35.0 dBm for E-GSM
  (45)% Typ at 32.5 dBm for DCS1800

Pin Arrangement

• RF-K-8A

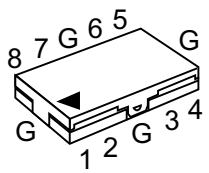

1: Pin $_{GSM}$
2: Vapc
3: Vdd1
4: Pout $_{GSM}$
5: Pout $_{DCS}$
6: Vdd2
7: Vctl
8: Pin $_{DCS}$
G: GND

Hitachi semiconductor

Absolute Maximum Ratings (Tc = 25°C)

Item	Symbol	Rating	Unit	Remark
Supply voltage	Vdd	7.0	V	at no-operation
		5.0	V	at operation (50 Ω load)
Supply current	Idd_{GSM}	3.5	A	
	Idd_{DCS}	2	A	
Vctl voltage	Vctl	4	V	
Vapc voltage	Vapc	4	V	
Input power	Pin	10	dBm	
Operating case temperature	Tc (op)	–25 to +85	°C	
Storage temperature	Tstg	–30 to +100	°C	
Output power	$Pout_{GSM}$	5	W	
	$Pout_{DCS}$	3	W	

Note: The maximum ratings shall be valid over both the E-GSM-band (880 to 915 MHz), and the DCS1800/1900 band (1710 to 1785 MHz, 1850 to 1910 MHz).

Electrical Characteristics for DC (Tc = 25°C)

Item	Symbol	Min	Typ	Max	Unit	Test Condition
Drain cutoff current	Ids	—	—	20	µA	Vdd = 4.7 V, Vapc = 0 V, Vctl = 0.2 V
Vapc control current	Iapc	—	—	2.0	mA	Vapc = 2.2 V
Vctl control current	Ictl	—	—	2	µA	Vctl = 3 V

Electrical Characteristics for GSM900 band (Tc = 25°C)

Test conditions unless otherwise noted:
f = 880 to 915 MHz, Vdd1 = Vdd2 = 3.5 V, Pin = 0 dBm, Vctl = 2.0 V, Rg = Rl = 50 Ω, Tc = 25°C,
Pulse operation with pulse width 577 µs and duty cycle 2:8 shall be used.

Item	Symbol	Min	Typ	Max	Unit	Test Condition
Frequency range	f	880	—	915	MHz	
Band select (GSM active)	Vctl	2.0	—	2.8	V	
Input power	Pin	–2	0	2	dBm	
Control voltage range	Vapc	0.2	—	2.2	V	
Supply voltage	Vdd	3.0	3.5	4.5	V	
Total efficiency	η_T	(48)	(55)	—	%	Pout $_{GSM}$ = 35 dBm,
2nd harmonic distortion	2nd H.D.	—	–45	–35	dBc	Vapc = controlled
3rd harmonic distortion	3rd H.D.	—	–45	–35	dBc	
4th~8th harmonic distortion	4th~8th H.D.	—	—	–35	dBc	
Input VSWR	VSWR (in)	—	1.5	3	—	
Output power (1)	Pout (1)	35.0	36.0	—	dBm	Vapc = 2.2 V
Output power (2)	Pout (2)	33.5	34.5	—	dBm	Vdd = 3.1 V, Vapc = 2.2 V, Tc = +85°C
Idd at Low power	—	—	100	(300)	mA	Pout $_{GSM}$ = 7 dBm
Isolation	—	—	–50	–37	dBm	Vapc = 0.2 V, Pin = 0 dBm
Isolation at DCS RF-output when GSM is active	—	—	–30	–20	dBm	Pout $_{GSM}$ = 35 dBm, Measured at f = 1760 to 1830 MHz
Switching time	t_r, t_f	—	1	2	µs	Pout $_{GSM}$ = 5 to 35 dBm
Stability	—	No parasitic oscillation			—	Vdd = 3.1 to 4.5 V, Pout ≤ 35 dBm, Vapc $_{GSM}$ ≤ 2.2 V, Rg = 50 Ω, Tc = 25°C, Output VSWR = 6 : 1 All phases
Load VSWR tolerance	—	No degradation			—	Vdd = 3.1 to 4.5 V, Pout $_{GSM}$ ≤ 35 dBm, Vapc $_{GSM}$ ≤ 2.2 V, Rg = 50 Ω, t = 20 sec., Tc = 25°C, Output VSWR = 10 : 1 All phases
Slope Pout/Vapc	—	—	180	200	dB/V	Pout $_{GSM}$ = 5 to 35 dBm
AM output	—	—	20	30	%	Pout $_{GSM}$ = 5 to 35 dBm, 4% AM modulation at input 50 kHz modulation frequency

Electrical Characteristics for DCS1800/1900 band (Tc = 25°C)

Test conditions unless otherwise noted:
f = 1710 to 1785, 1850 to 1910 MHz, Vdd1 = Vdd2 = 3.5 V, Pin = 0 dBm, Vctl = 0.2 V, Rg = Rl = 50 Ω, Tc = 25°C, Pulse operation with pulse width 577 µs and duty cycle 2:8 shall be used.

Item	Symbol	Min	Typ	Max	Unit	Test Condition
Frequency range	f	1710	—	1910	MHz	1710 to 1785 MHz/DCS1800 band 1850 to 1910 MHz/DCS1900 band
Band select (DCS active)	Vctl	0	—	0.2	V	
Input power	Pin	–2	0	2	dBm	
Control voltage range	Vapc	0.2	—	2.2	V	
Supply voltage	Vdd	3.0	3.5	4.5	V	
Total efficiency	η_T	(43)	(50)	—	%	Pout $_{DCS}$ = 32.5 dBm,
2nd harmonic distortion	2nd H.D.	—	–45	–35	dBc	Vapc = controlled
3rd harmonic distortion	3rd H.D.	—	–45	–35	dBc	
4th~8th harmonic distortion	4th~8th H.D.	—	—	–35	dBc	
Input VSWR	VSWR (in)	—	1.5	3	—	
Output power (1)	Pout (1)	32.5	33.5	—	dBm	Vapc = 2.2 V
Output power (2)	Pout (2)	31.0	32.0	—	dBm	Vdd = 3.1 V, Vapc = 2.2 V, Tc = +85°C, Pin $_{DCS}$ = 0 dBm
Idd at Low power	—	—	50	(100)	mA	Pout $_{DCS}$ = 5 dBm
Isolation	—	—	–47	–37	dBm	Vapc = 0.2 V, Pin $_{DCS}$ = 0 dBm
Switching time	t_r, t_f	—	1	2	µs	Pout $_{DCS}$ = 0 to 32.5 dBm
Stability	—	No parasitic oscillation			—	Vdd = 3.1 to 4.5 V, Pout $_{DCS}$ ≤ 32.5 dBm, Vapc ≤ 2.2 V, Rg = 50 Ω, Output VSWR = 6 : 1 All phases
Load VSWR tolerance	—	No degradation			—	Vdd = 3.1 to 4.5 V, Pout $_{DCS}$ ≤ 32.5 dBm, Vapc ≤ 2.2 V, Rg = 50 Ω, t = 20 sec., Output VSWR = 10 : 1 All phases
Slope Pout/Vapc	—	—	180	200	dB/V	Pout $_{DCS}$ = 0 to 32.5 dBm
AM output	—	—	20	30	%	Pout $_{DCS}$ = 0 to 32.5 dBm, 4% AM modulation at input 50 kHz modulation frequency

Circuit Diagram

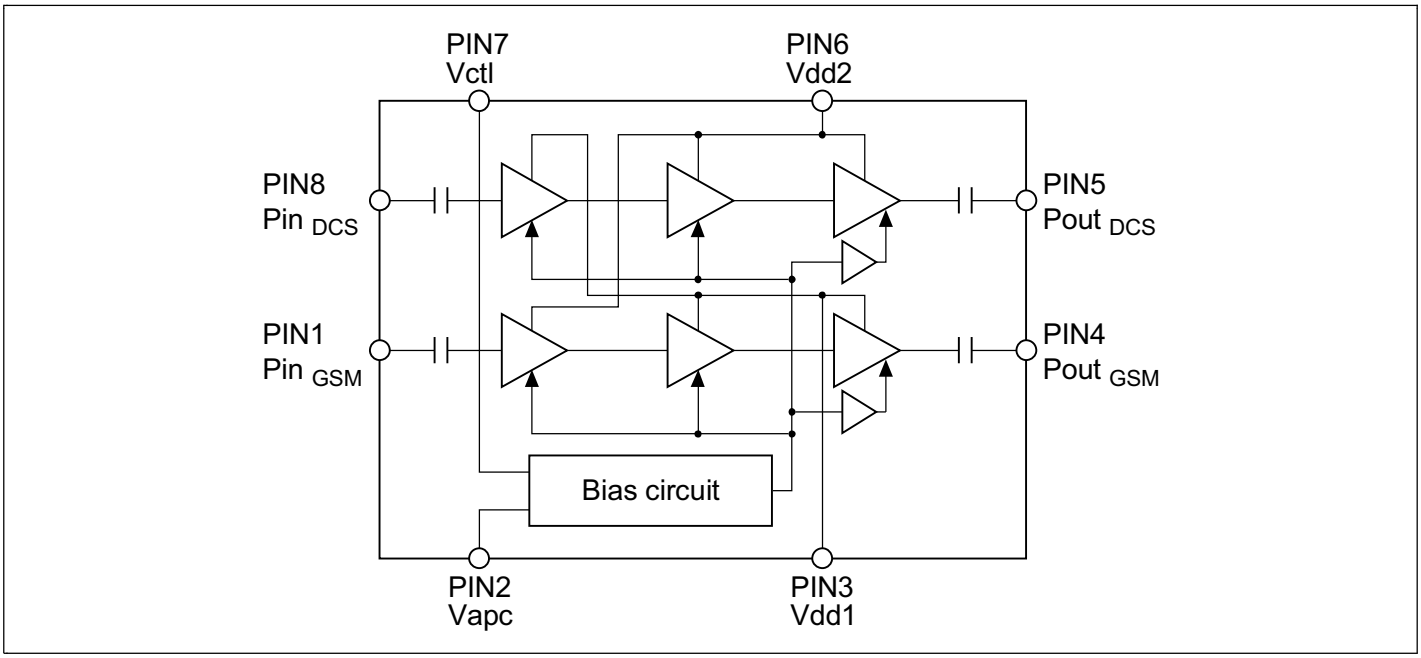

Package Dimensions

Unit: mm

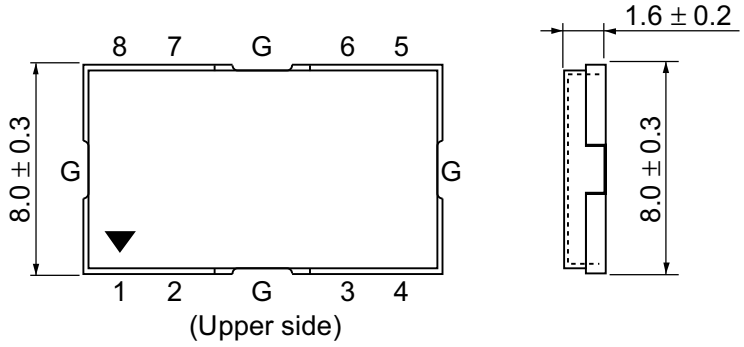

(Upper side)

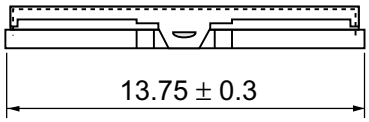

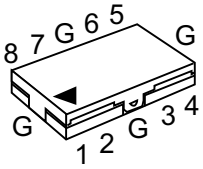

1: Pin $_{GSM}$
2: Vapc
3: Vdd1
4: Pout $_{GSM}$
5: Pout $_{DCS}$
6: Vdd2
7: Vctl
8: Pin $_{DCS}$
G: GND

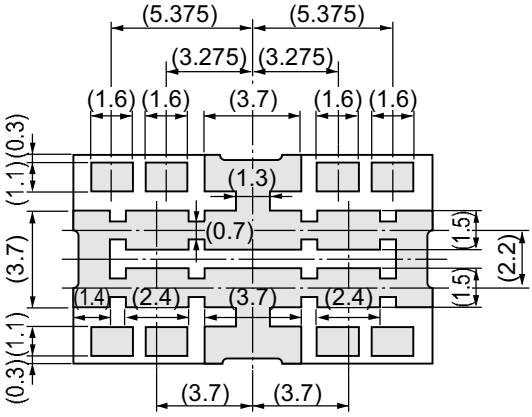

(Bottom side)

Remark:
Coplanarity of bottom side of terminals are less than 0 ± 0.1mm.

Hitachi Code	RF-K-8A
JEDEC	—
EIAJ	—
Mass (reference value)	—

Cautions

1. Hitachi neither warrants nor grants licenses of any rights of Hitachi's or any third party's patent, copyright, trademark, or other intellectual property rights for information contained in this document. Hitachi bears no responsibility for problems that may arise with third party's rights, including intellectual property rights, in connection with use of the information contained in this document.
2. Products and product specifications may be subject to change without notice. Confirm that you have received the latest product standards or specifications before final design, purchase or use.
3. Hitachi makes every attempt to ensure that its products are of high quality and reliability. However, contact Hitachi's sales office before using the product in an application that demands especially high quality and reliability or where its failure or malfunction may directly threaten human life or cause risk of bodily injury, such as aerospace, aeronautics, nuclear power, combustion control, transportation, traffic, safety equipment or medical equipment for life support.
4. Design your application so that the product is used within the ranges guaranteed by Hitachi particularly for maximum rating, operating supply voltage range, heat radiation characteristics, installation conditions and other characteristics. Hitachi bears no responsibility for failure or damage when used beyond the guaranteed ranges. Even within the guaranteed ranges, consider normally foreseeable failure rates or failure modes in semiconductor devices and employ systemic measures such as fail-safes, so that the equipment incorporating Hitachi product does not cause bodily injury, fire or other consequential damage due to operation of the Hitachi product.
5. This product is not designed to be radiation resistant.
6. No one is permitted to reproduce or duplicate, in any form, the whole or part of this document without written approval from Hitachi.
7. Contact Hitachi's sales office for any questions regarding this document or Hitachi semiconductor products.

HITACHI

Hitachi, Ltd.
Semiconductor & Integrated Circuits.
Nippon Bldg., 2-6-2, Ohte-machi, Chiyoda-ku, Tokyo 100-0004, Japan
Tel: Tokyo (03) 3270-2111 Fax: (03) 3270-5109

URL NorthAmerica : http://semiconductor.hitachi.com/
Europe : http://www.hitachi-eu.com/hel/ecg
Asia : http://sicapac.hitachi-asia.com
Japan : http://www.hitachi.co.jp/Sicd/indx.htm

For further information write to:

Hitachi Semiconductor (America) Inc.
179 East Tasman Drive,
San Jose,CA 95134
Tel: <1> (408) 433-1990
Fax: <1>(408) 433-0223

Hitachi Europe GmbH
Electronic Components Group
Dornacher Stra§e 3
D-85622 Feldkirchen, Munich
Germany
Tel: <49> (89) 9 9180-0
Fax: <49> (89) 9 29 30 00

Hitachi Europe Ltd.
Electronic Components Group.
Whitebrook Park
Lower Cookham Road
Maidenhead
Berkshire SL6 8YA, United Kingdom
Tel: <44> (1628) 585000
Fax: <44> (1628) 585160

Hitachi Asia Ltd.
Hitachi Tower
16 Collyer Quay #20-00,
Singapore 049318
Tel : <65>-538-6533/538-8577
Fax : <65>-538-6933/538-3877
URL : http://www.hitachi.com.sg

Hitachi Asia Ltd.
(Taipei Branch Office)
4/F, No. 167, Tun Hwa North Road,
Hung-Kuo Building,
Taipei (105), Taiwan
Tel : <886>-(2)-2718-3666
Fax : <886>-(2)-2718-8180
Telex : 23222 HAS-TP
URL : http://www.hitachi.com.tw

Hitachi Asia (Hong Kong) Ltd.
Group III (Electronic Components)
7/F., North Tower,
World Finance Centre,
Harbour City, Canton Road
Tsim Sha Tsui, Kowloon,
Hong Kong
Tel : <852>-(2)-735-9218
Fax : <852>-(2)-730-0281
URL : http://www.hitachi.com.hk

Colophon 2.0