DATA SHEET

PCF1171C
4-digit LCD car clock

Product specification
Supersedes data of September 1993
File under Integrated Circuits, IC16

1997 Apr 16

Philips
Semiconductors

PHILIPS

FEATURES

- Driving standard 3½ or a 4-digit LCD
- Internal voltage regulator for 5 V LCD
- Option for external stabilized voltage supply
- 4.19 MHz oscillator
- Integrated oscillator output capacitor and polarization resistor
- Operating ambient temperature: –40 to +85 °C
- 40-lead plastic SMD, face down (VSO40).

GENERAL DESCRIPTION

The PCF1171C is a single chip, 4.19 MHz CMOS car clock circuit indicating hours and minutes. It is designed to drive a 3½ or 4-digit liquid crystal display (LCD).

Two external single-pole, single-throw switches will accomplish all time setting functions. A bonding option allows the selection of 12-hour or 24-hour display mode. The circuit is battery-operated via an internal 5 V voltage regulator or by an external stabilized voltage supply.

ORDERING INFORMATION

TYPE NUMBER	PACKAGE		
	NAME	DESCRIPTION	VERSION
PCF1171CT	VSO40	plastic very small outline package; 40 leads; face down(1)	SOT158-2
PCF1171CU	–	uncased chip in tray(2)	–

Notes

1. See Fig.1 and Chapter “Package outline” for pin layout and package details.
2. See Chapter “Chip dimensions and bonding pad locations” for pad layout and package details.

PINNING

SYMBOL	PIN	DESCRIPTION
OSC OUT	1	oscillator output
OSC IN	2	oscillator input
S1	3	set hour
S3	4	±2 minute correction
BP	5	64 Hz backplane driver (common of LCD)
ADEG1	6	segment driver
C1	7	segment driver
E2	8	segment driver
D2	9	segment driver
C2	10	segment driver
E3	11	segment driver
D3	12	segment driver
C3	13	segment driver
E4	14	segment driver
D4	15	segment driver
C4	16	segment driver
B4	17	segment driver
S2	18	set minutes
S4	19	internal voltage regulation
V_{SS}	20	negative supply
S6	21	selectable correction mode
S5	22	12/24-hour mode
V_{DD}	23	positive supply
A4	24	segment driver
F4	25	segment driver
G4	26	segment driver
B3	27	segment driver
A3	28	segment driver
F3	29	segment driver
G3	30	segment driver
P1, P2	31	colon flashing
P3, P4	32	colon static
B2	33	segment driver
A2	34	segment driver
F2	35	segment driver
G2	36	segment driver
B1	37	segment driver
TR	38	test reset; connect to (V_{DD})
TS	39	test speed-up; connect to (V_{DD})
(V_{DD})	40	positive supply for test and oscillator inputs

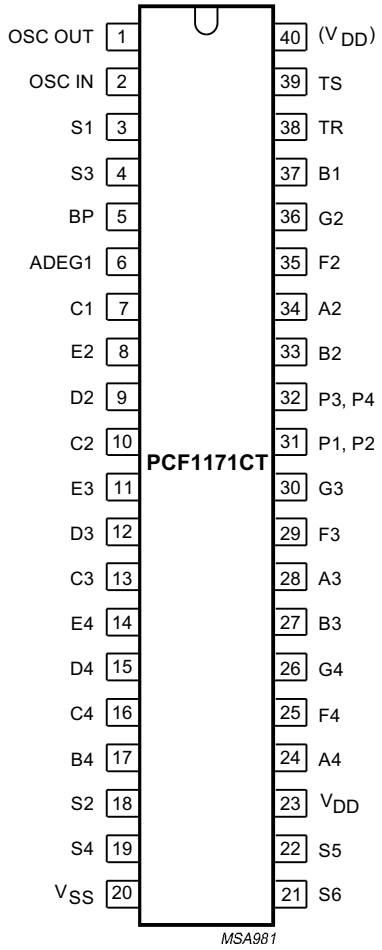

Fig.1 Pin configuration, PCF1171CT, (VSO40).

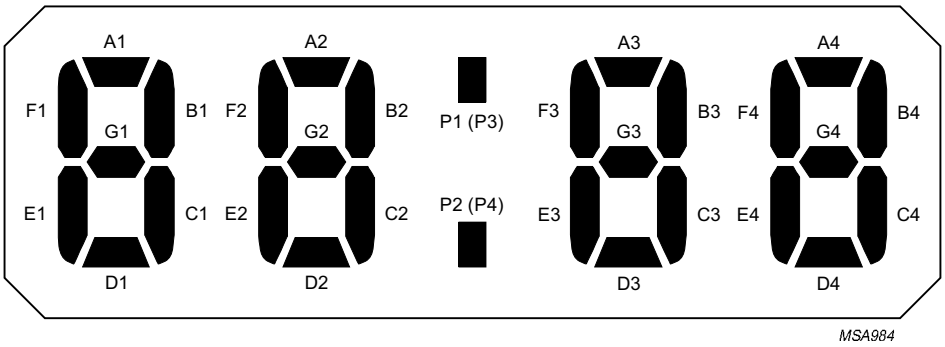

Fig.2 Segment designation of LCD.

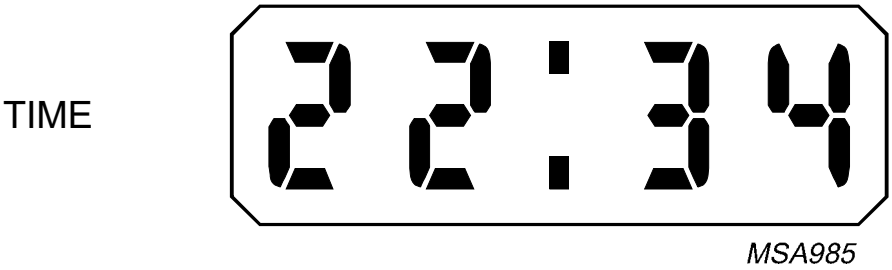

Fig.3 Display mode (24-hour mode shown).

OPERATIONAL INPUTS

Operational inputs S1, S2 and S3 have an internal pull-up resistor to facilitate use of external single-pole, single-throw switches. A specific debounce circuit is integrated as protection against contact debounce and parasitic voltages.

In the description below, an arrangement as shown in Fig.5 is assumed and S1, S2 and S3 refer to the external switches rather than the corresponding inputs.

Set hours, switch S1

Closure of S1 increments the hours according to the correction mode selected by S6 (see Chapter “Input options”).

Set minutes/reset seconds, switch S2

When S2 is closed, the minute setting is corrected according to the correction mode determined by S6 (see Chapter “Input options”).

The seconds counter is reset to zero each time S2 is closed, and begins running each time S2 is opened.

Segment test/reset, switches S1 and S2

If S1 and S2 are closed simultaneously all LCD segments are switched on. When the switches are released, the clock starts at 1 : 00 in the 12-hour mode or 0 : 00 in the 24-hour mode.

Time correction ±2 minutes, switch S3

This switch operates in two ranges:

- Displayed time ≥ 58 minutes 00 seconds
- Displayed time ≤ 1 minute 59 seconds.

When switch S3 is pressed in these ranges, the minutes and seconds are reset to zero. For displayed time ≥ 58 minutes 00 seconds, the hour is also incremented by one.

INPUT OPTIONS

In the description below S4, S5 and S6 refer to the external switches shown in Fig.5 rather than to the corresponding inputs.

In a real application, these inputs will normally be bonded to the appropriate level to give the required function mode.

Internal/external regulation, switch S4

For internal regulation, S4 is closed, the internal voltage regulator is active and the voltage supply for the LCD is regulated to 5 V. For external regulation, S4 is open and the circuit has to be supplied with an externally regulated voltage.

12/24-hour mode, switch S5

For 12-hour display mode, S5 is connected to V_{DD}.
For 24-hour display mode, S5 is connected to V_{SS}.

Single/continuous correction mode, switch S6

For single-set correction mode, S6 is connected to V_{DD}. Each closure of S1 or S2 advances the counter by one.

For continuous-set correction mode, S6 is connected to V_{SS}. Momentary closure of S1 or S2 causes single increments as for single-set correction mode. If S1 or S2 is kept closed for more than 1s, the counter is automatically incremented by 1 for each full second that S1 or S2 is kept closed.

TESTING

In normal operation the test inputs TR (pin 38) and TS (pin 39) have to be connected to V_{DD} (pin 23). A test frequency (64 Hz) is available at BP (pin 5). The test mode is activated by connecting TS to V_{SS} (pin 20). All output frequencies are then increased by a factor of 65536.
In this mode the maximum input frequency is 100 kHz (external generator at OSC IN). By connecting TR to V_{SS} all counters (seconds, minutes and hours) are stopped. After connecting TR to V_{DD} all counters start from an initial state.

The switches/inputs described above also operate in the test mode.

LIMITING VALUES

In accordance with the Absolute Maximum Rating System (IEC 134).

SYMBOL	PARAMETER	CONDITIONS	MIN.	MAX.	UNIT
V_{DD}	supply voltage with respect to V_{SS} with internal regulation disconnected;	note 1	–	8	V
V_I	all input voltages		V_{SS} – 0.3	V_{DD} + 0.3	V
T_{amb}	operating ambient temperature		–40	+85	°C
T_{stg}	storage temperature		–55	+125	°C

Note

1. Connecting the supply voltage with reverse polarity, will not harm the circuit, provided the current is limited to 10 mA by the external resistor.

HANDLING

Inputs and outputs are protected against electrostatic discharges in normal handling. However, to be totally safe, it is advisable to take handling precautions appropriate to handling MOS devices. Advice can be found in *"Data Handbook IC16, General, Handling MOS Devices"*.

CHARACTERISTICS

V_{DD} = 5 V; V_{SS} = 0 V; T_{amb} = –40 to +85 °C; crystal: f = 4.194304 MHz; R_s = 50 Ω; C_L = 12 pF; unless otherwise specified.

SYMBOL	PARAMETER	CONDITIONS	MIN.	TYP.	MAX.	UNIT
Supply						
V_{DD}	supply voltage					
	external regulation		3	–	6	V
	internal regulation	I_{REG} = 1 mA	4	5	6	V
I_{REG}	regulation current with internal regulation		0.2	–	5	mA
I_{DD}	current consumption	all switches open; without LCD; internal regulation disconnected; note 1	50	400	700	μA
r_o	differential internal impedance	I_{REG} = 1 mA	–	–	150	Ω
Oscillator (pins 1 and 2) (see note 2)						
t_{osc}	start time		–	–	200	ms
$\Delta f/f_{osc}$	frequency stability	ΔV_{DD} = 100 mV	–	0.2×10^{-6}	1×10^{-6}	
R_{fb}	feedback resistance		0.1	–	1	MΩ
C_i	input capacitance		–	–	9	pF
C_o	output capacitance		19	24	29	pF
Switches S1, S2 and S3 (pins 18, 3 and 4) and test inputs, TS, TR (pins 38 and 39)						
I_i	input current	with inputs connected to V_{SS}	50	150	500	μA
t_d	debounce time		32	–	150	ms
R_S	segment driver output resistance	I_L = ±50 μA	–	1	2.5	kΩ
R_{BP}	backplane driver output resistance	I_L = ±250 μA	–	0.2	0.5	kΩ
f_{BP}	backplane driver output frequency		–	64	–	Hz
$V_{offset(DC)}$	LCD DC offset voltage	R_L = 200 kΩ; C_L = 1 nF	–	–	±50	mV

Notes

1. The current $I_{EXT} = I_{REG} + I_{DD} + 2 \times I_i$ (+ LCD current).
2. For correct operation of the oscillator: $V_{DD} \geq 3$ V.

CHIP DIMENSIONS AND BONDING PAD LOCATIONS

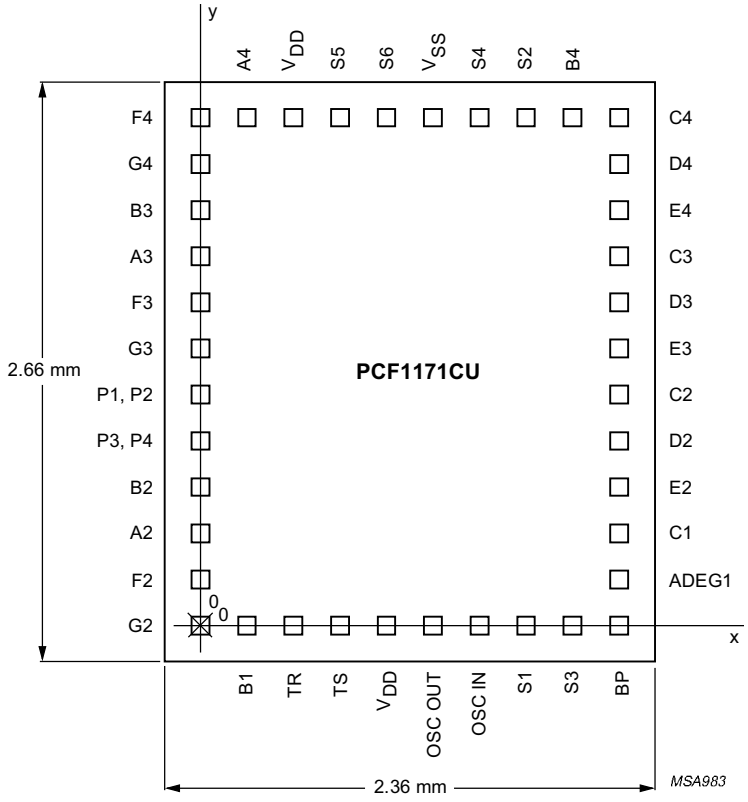

Chip area: 6.28 mm^2.
Bonding pad dimensions: 110 μm × 110 μm.
Chip thickness: 381 ±25 μm.

Fig.4 Bonding pad locations, PCF1171CU; 40 terminals.

Table 1 Bonding pad locations (dimensions in μm)
All x/y coordinates are referenced to the pad G2, see Fig.4.

PAD	x	y	PAD	x	y
OSC OUT	1060	0	S6	860	2320
OSC IN	1260	0	S5	660	2320
S1	1460	0	V_{DD}	460	2320
S3	1680	0	A4	240	2320
BP	1920	0	F4	0	2320
ADEG1	1920	240	G4	0	2080
C1	1920	460	B3	0	1860
E2	1920	660	A3	0	1660
D2	1920	860	F3	0	1460
C2	1920	1060	G3	0	1260
E3	1920	1260	P1, P2	0	1060
D3	1920	1460	P3, P4	0	860
C3	1920	1660	B2	0	660
E4	1920	1860	A2	0	460
D4	1920	2080	F2	0	240
C4	1920	2320	G2	0	0
B4	1680	2320	B1	240	0
S2	1460	2320	TR	460	0
S4	1260	2320	TS	660	0
V_{SS}	1060	2320	V_{DD}	860	0
chip corner (max. value)	−220	−170			

APPLICATION INFORMATION

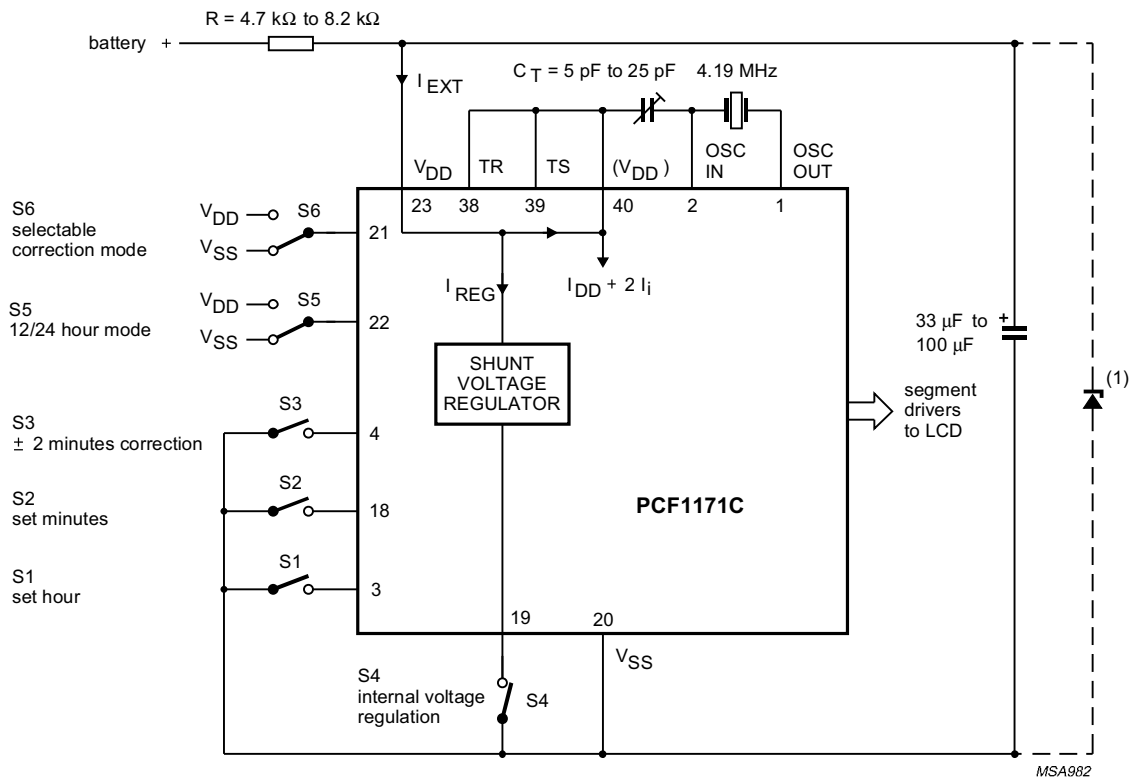

(1) Only required if internal regulation is disconnected.

From pin 2 (OSC IN) to any other pin the stray capacitance should not exceed 2 pF.

Fig.5 Typical application diagram.

PACKAGE OUTLINE

VSO40: plastic very small outline package; 40 leads; face down **SOT158-2**

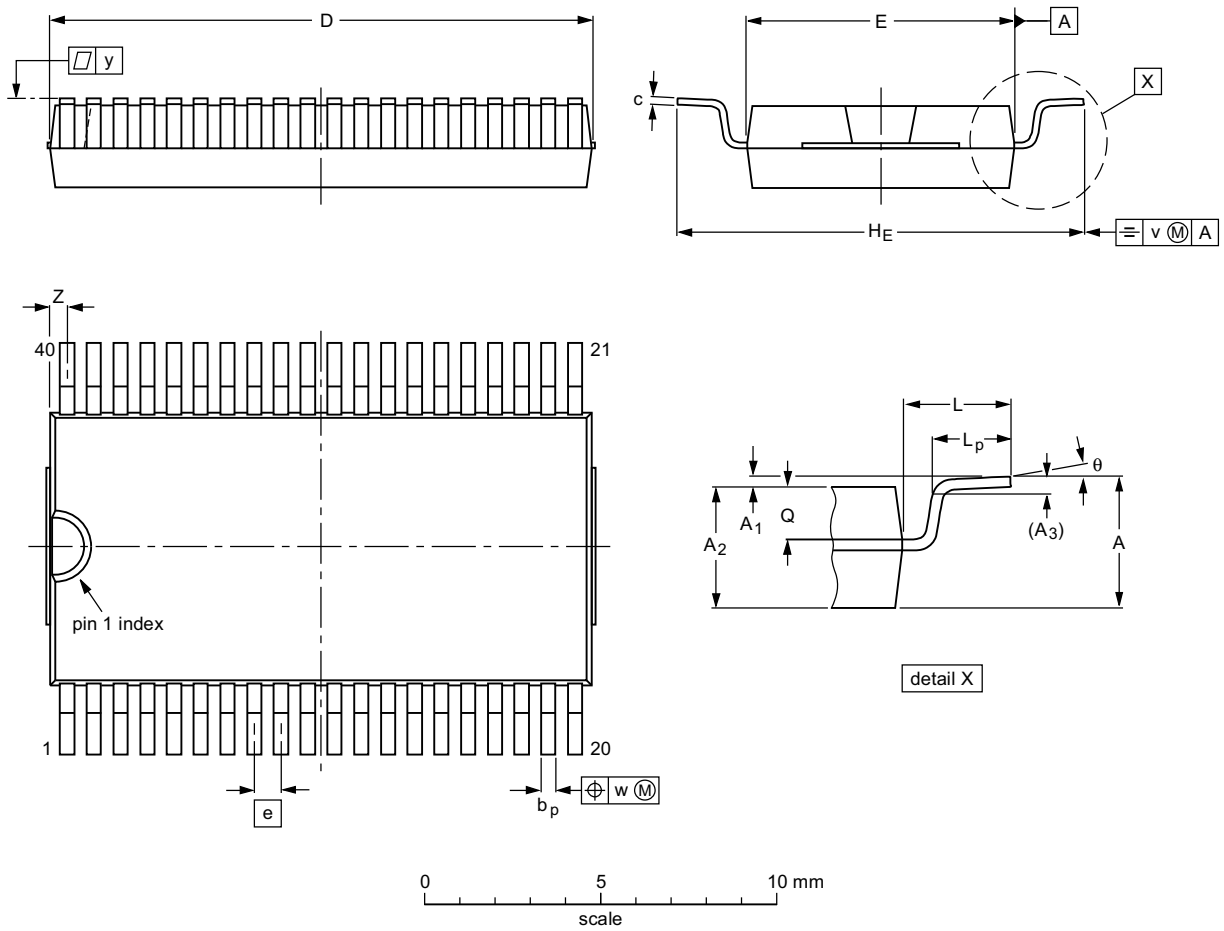

DIMENSIONS (inch dimensions are derived from the original mm dimensions)

UNIT	A max.	A_1	A_2	A_3	b_p	c	D(1)	E(2)	e	H_E	L	L_p	Q	v	w	y	Z(1)	θ
mm	2.70	0.3 0.1	2.45 2.25	0.25	0.42 0.30	0.22 0.14	15.6 15.2	7.6 7.5	0.762	12.3 11.8	2.25	1.7 1.5	1.15 1.05	0.2	0.1	0.1	0.6 0.3	7° 0°
inches	0.11	0.012 0.004	0.096 0.089	0.010	0.017 0.012	0.0087 0.0055	0.61 0.60	0.30 0.29	0.03	0.48 0.46	0.089	0.067 0.059	0.045 0.041	0.008	0.004	0.004	0.024 0.012	

Note

1. Plastic or metal protrusions of 0.4 mm maximum per side are not included.
2. Plastic interlead protrusions of 0.25 mm maximum per side are not included.

OUTLINE VERSION	REFERENCES				EUROPEAN PROJECTION	ISSUE DATE
	IEC	JEDEC	EIAJ			
SOT158-2						~~92-11-17~~ 95-01-24

SOLDERING

Introduction

There is no soldering method that is ideal for all IC packages. Wave soldering is often preferred when through-hole and surface mounted components are mixed on one printed-circuit board. However, wave soldering is not always suitable for surface mounted ICs, or for printed-circuits with high population densities. In these situations reflow soldering is often used.

This text gives a very brief insight to a complex technology. A more in-depth account of soldering ICs can be found in our *"IC Package Databook"* (order code 9398 652 90011).

Reflow soldering

Reflow soldering techniques are suitable for all VSO packages.

Reflow soldering requires solder paste (a suspension of fine solder particles, flux and binding agent) to be applied to the printed-circuit board by screen printing, stencilling or pressure-syringe dispensing before package placement.

Several techniques exist for reflowing; for example, thermal conduction by heated belt. Dwell times vary between 50 and 300 seconds depending on heating method. Typical reflow temperatures range from 215 to 250 °C.

Preheating is necessary to dry the paste and evaporate the binding agent. Preheating duration: 45 minutes at 45 °C.

Wave soldering

Wave soldering techniques can be used for all VSO packages if the following conditions are observed:

- A double-wave (a turbulent wave with high upward pressure followed by a smooth laminar wave) soldering technique should be used.
- The longitudinal axis of the package footprint must be parallel to the solder flow.
- The package footprint must incorporate solder thieves at the downstream end.

During placement and before soldering, the package must be fixed with a droplet of adhesive. The adhesive can be applied by screen printing, pin transfer or syringe dispensing. The package can be soldered after the adhesive is cured.

Maximum permissible solder temperature is 260 °C, and maximum duration of package immersion in solder is 10 seconds, if cooled to less than 150 °C within 6 seconds. Typical dwell time is 4 seconds at 250 °C.

A mildly-activated flux will eliminate the need for removal of corrosive residues in most applications.

Repairing soldered joints

Fix the component by first soldering two diagonally-opposite end leads. Use only a low voltage soldering iron (less than 24 V) applied to the flat part of the lead. Contact time must be limited to 10 seconds at up to 300 °C. When using a dedicated tool, all other leads can be soldered in one operation within 2 to 5 seconds between 270 and 320 °C.

DEFINITIONS

Data sheet status	
Objective specification	This data sheet contains target or goal specifications for product development.
Preliminary specification	This data sheet contains preliminary data; supplementary data may be published later.
Product specification	This data sheet contains final product specifications.
Limiting values	
Limiting values given are in accordance with the Absolute Maximum Rating System (IEC 134). Stress above one or more of the limiting values may cause permanent damage to the device. These are stress ratings only and operation of the device at these or at any other conditions above those given in the Characteristics sections of the specification is not implied. Exposure to limiting values for extended periods may affect device reliability.	
Application information	
Where application information is given, it is advisory and does not form part of the specification.	

LIFE SUPPORT APPLICATIONS

These products are not designed for use in life support appliances, devices, or systems where malfunction of these products can reasonably be expected to result in personal injury. Philips customers using or selling these products for use in such applications do so at their own risk and agree to fully indemnify Philips for any damages resulting from such improper use or sale.

NOTES

NOTES

NOTES

Philips Semiconductors – a worldwide company

Argentina: see South America

Australia: 34 Waterloo Road, NORTH RYDE, NSW 2113, Tel. +61 2 9805 4455, Fax. +61 2 9805 4466

Austria: Computerstr. 6, A-1101 WIEN, P.O. Box 213, Tel. +43 1 60 101, Fax. +43 1 60 101 1210

Belarus: Hotel Minsk Business Center, Bld. 3, r. 1211, Volodarski Str. 6, 220050 MINSK, Tel. +375 172 200 733, Fax. +375 172 200 773

Belgium: see The Netherlands

Brazil: see South America

Bulgaria: Philips Bulgaria Ltd., Energoproject, 15th floor, 51 James Bourchier Blvd., 1407 SOFIA, Tel. +359 2 689 211, Fax. +359 2 689 102

Canada: PHILIPS SEMICONDUCTORS/COMPONENTS, Tel. +1 800 234 7381

China/Hong Kong: 501 Hong Kong Industrial Technology Centre, 72 Tat Chee Avenue, Kowloon Tong, HONG KONG, Tel. +852 2319 7888, Fax. +852 2319 7700

Colombia: see South America

Czech Republic: see Austria

Denmark: Prags Boulevard 80, PB 1919, DK-2300 COPENHAGEN S, Tel. +45 32 88 2636, Fax. +45 31 57 0044

Finland: Sinikalliontie 3, FIN-02630 ESPOO, Tel. +358 9 615800, Fax. +358 9 61580920

France: 4 Rue du Port-aux-Vins, BP317, 92156 SURESNES Cedex, Tel. +33 1 40 99 6161, Fax. +33 1 40 99 6427

Germany: Hammerbrookstraße 69, D-20097 HAMBURG, Tel. +49 40 23 53 60, Fax. +49 40 23 536 300

Greece: No. 15, 25th March Street, GR 17778 TAVROS/ATHENS, Tel. +30 1 4894 339/239, Fax. +30 1 4814 240

Hungary: see Austria

India: Philips INDIA Ltd, Shivsagar Estate, A Block, Dr. Annie Besant Rd. Worli, MUMBAI 400 018, Tel. +91 22 4938 541, Fax. +91 22 4938 722

Indonesia: see Singapore

Ireland: Newstead, Clonskeagh, DUBLIN 14, Tel. +353 1 7640 000, Fax. +353 1 7640 200

Israel: RAPAC Electronics, 7 Kehilat Saloniki St, PO Box 18053, TEL AVIV 61180, Tel. +972 3 645 0444, Fax. +972 3 649 1007

Italy: PHILIPS SEMICONDUCTORS, Piazza IV Novembre 3, 20124 MILANO, Tel. +39 2 6752 2531, Fax. +39 2 6752 2557

Japan: Philips Bldg 13-37, Kohnan 2-chome, Minato-ku, TOKYO 108, Tel. +81 3 3740 5130, Fax. +81 3 3740 5077

Korea: Philips House, 260-199 Itaewon-dong, Yongsan-ku, SEOUL, Tel. +82 2 709 1412, Fax. +82 2 709 1415

Malaysia: No. 76 Jalan Universiti, 46200 PETALING JAYA, SELANGOR, Tel. +60 3 750 5214, Fax. +60 3 757 4880

Mexico: 5900 Gateway East, Suite 200, EL PASO, TEXAS 79905, Tel. +9-5 800 234 7381

Middle East: see Italy

Netherlands: Postbus 90050, 5600 PB EINDHOVEN, Bldg. VB, Tel. +31 40 27 82785, Fax. +31 40 27 88399

New Zealand: 2 Wagener Place, C.P.O. Box 1041, AUCKLAND, Tel. +64 9 849 4160, Fax. +64 9 849 7811

Norway: Box 1, Manglerud 0612, OSLO, Tel. +47 22 74 8000, Fax. +47 22 74 8341

Philippines: Philips Semiconductors Philippines Inc., 106 Valero St. Salcedo Village, P.O. Box 2108 MCC, MAKATI, Metro MANILA, Tel. +63 2 816 6380, Fax. +63 2 817 3474

Poland: Ul. Lukiska 10, PL 04-123 WARSZAWA, Tel. +48 22 612 2831, Fax. +48 22 612 2327

Portugal: see Spain

Romania: see Italy

Russia: Philips Russia, Ul. Usatcheva 35A, 119048 MOSCOW, Tel. +7 095 755 6918, Fax. +7 095 755 6919

Singapore: Lorong 1, Toa Payoh, SINGAPORE 1231, Tel. +65 350 2538, Fax. +65 251 6500

Slovakia: see Austria

Slovenia: see Italy

South Africa: S.A. PHILIPS Pty Ltd., 195-215 Main Road Martindale, 2092 JOHANNESBURG, P.O. Box 7430 Johannesburg 2000, Tel. +27 11 470 5911, Fax. +27 11 470 5494

South America: Rua do Rocio 220, 5th floor, Suite 51, 04552-903 São Paulo, SÃO PAULO - SP, Brazil, Tel. +55 11 821 2333, Fax. +55 11 829 1849

Spain: Balmes 22, 08007 BARCELONA, Tel. +34 3 301 6312, Fax. +34 3 301 4107

Sweden: Kottbygatan 7, Akalla, S-16485 STOCKHOLM, Tel. +46 8 632 2000, Fax. +46 8 632 2745

Switzerland: Allmendstrasse 140, CH-8027 ZÜRICH, Tel. +41 1 488 2686, Fax. +41 1 481 7730

Taiwan: Philips Semiconductors, 6F, No. 96, Chien Kuo N. Rd., Sec. 1, TAIPEI, Taiwan Tel. +886 2 2134 2865, Fax. +886 2 2134 2874

Thailand: PHILIPS ELECTRONICS (THAILAND) Ltd., 209/2 Sanpavuth-Bangna Road Prakanong, BANGKOK 10260, Tel. +66 2 745 4090, Fax. +66 2 398 0793

Turkey: Talatpasa Cad. No. 5, 80640 GÜLTEPE/ISTANBUL, Tel. +90 212 279 2770, Fax. +90 212 282 6707

Ukraine: PHILIPS UKRAINE, 4 Patrice Lumumba str., Building B, Floor 7, 252042 KIEV, Tel. +380 44 264 2776, Fax. +380 44 268 0461

United Kingdom: Philips Semiconductors Ltd., 276 Bath Road, Hayes, MIDDLESEX UB3 5BX, Tel. +44 181 730 5000, Fax. +44 181 754 8421

United States: 811 East Arques Avenue, SUNNYVALE, CA 94088-3409, Tel. +1 800 234 7381

Uruguay: see South America

Vietnam: see Singapore

Yugoslavia: PHILIPS, Trg N. Pasica 5/v, 11000 BEOGRAD, Tel. +381 11 625 344, Fax.+381 11 635 777

For all other countries apply to: Philips Semiconductors, Marketing & Sales Communications, Building BE-p, P.O. Box 218, 5600 MD EINDHOVEN, The Netherlands, Fax. +31 40 27 24825

Internet: http://www.semiconductors.philips.com

Printed in The Netherlands 417087/1200/02/pp16 Date of release: 1997 Apr 16 Document order number: 9397 750 01526

Let's make things better.

Philips Semiconductors

PHILIPS