FAIRCHILD SEMICONDUCTOR®

November 1996
Revised December 2005

NC7SZ66
Low Voltage Single SPST Normally Open Bus Switch

General Description

The NC7SZ66 is a ultra high-speed (UHS) CMOS compatible single-pole/single-throw (SPST) bus switch. The LOW On Resistance of the switch allows inputs to be connected to outputs with minimal propagation delay and without generating additional ground bounce noise. The device is organized as a 1-bit switch with a switch enable (OE) signal. When OE is HIGH, the switch is on and Port A is connected to Port B. When OE is LOW, the switch is open and a high-impedance state exists between the two ports.

Features

- Space saving SOT23 or SC70 5-lead package
- Ultra small MicroPak™ Pb-Free leadless package
- Broad V_{CC} Operating Range 1.65V–5.5V
- Rail-to-rail signal handling
- 5Ω switch connection between two ports
- Minimal propagation delay through the switch
- Low I_{CC}
- Zero bounce in flow-through mode
- Control input compatible with CMOS input levels

Ordering Code:

Order Number	Package Number	Product Code Top Mark	Package Description	Supplied As
NC7SZ66M5X	MA05B	7Z66	5-Lead SOT23, JEDEC MO-178, 1.6mm	3k Units on Tape and Reel
NC7SZ66P5X	MAA05A	Z66	5-Lead SC70, EIAJ SC-88a, 1.25mm Wide	3k Units on Tape and Reel
NC7SZ66L6X	MAC06	EE	Pb-Free 6-Lead MicroPak, 1.0mm Wide	5k Units on Tape and Reel

Pb-Free package per JEDEC J-STD-020B.

MicroPak™ is a trademark of Fairchild Semiconductor Corporation.

Logic Symbol

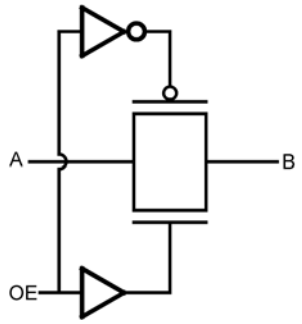

Pin Descriptions

Pin Names	Description
OE	Switch Enable Input
A	Bus A I/O
B	Bus B I/O
NC	No Connect

Function Table

OE	B_0	Function
L	HIGH-Z State	Disconnect
H	A_0	Connect

Connection Diagrams

Pin Assignments for SC70

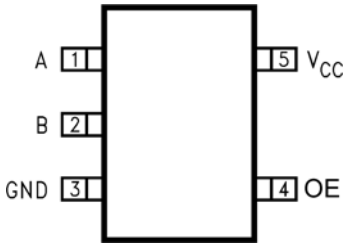

(Top View)

Pad Assignment for MicroPak

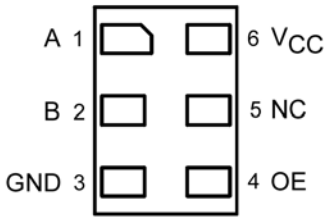

(Top Through View)

Absolute Maximum Ratings (Note 1)

Supply Voltage (V_{CC})	−0.5V to +7.0V
DC Switch Voltage (V_S)	−0.5V to V_{CC} +0.5V
DC Input Voltage (V_{IN}) (Note 2)	−0.5V to +7.0V
DC Input Diode Current	
(I_{IK}) $V_{IN} < 0V$	−50 mA
DC Output (I_{OUT}) Sink Current	128 mA
DC V_{CC}/GND Current (I_{CC}/I_{GND})	±100 mA
Storage Temperature Range	
(T_{STG})	−65°C to +150°C
Junction Lead Temperature	
under Bias (T_J)	+150°C
Junction Lead Temperature (T_L)	
(Soldering, 10 Seconds)	+260°C
Power Dissipation (P_D) @ +85°C	
SOT23-5	200 mW
SC70-5	150 mW

Recommended Operating Conditions (Note 3)

Power Supply Operating (V_{CC})	1.65V to 5.5V
Control Input Voltage (V_{IN})	0V to 5.5V
Switch Input Voltage (V_{IN})	0V to V_{CC}
Switch Output Voltage (V_{OUT})	0V to V_{CC}
Input Rise and Fall Time (t_r, t_f)	
Control Input; V_{CC} = 2.3V–3.6V	0 ns/V to 10 ns
Control Input; V_{CC} = 4.5–5.5V	0 ns/V to 5 ns
Switch I/O	0 ns/V to DC
Operating Temperature (T_A)	−40°C to +85°C
Thermal Resistance (θ_{JA})	
SOT23-5	300°C/Watt
SC70-5	425°C/Watt

Note 1: The "Absolute Maximum Ratings" are those values beyond which the safety of the device cannot be guaranteed. The device should not be operated at these limits. The parametric values defined in the Electrical Characteristics tables are not guaranteed at the absolute maximum ratings. The "Recommended Operating Conditions" table will define the conditions for actual device operation.

Note 2: The input and output negative voltage ratings may be exceeded if the input and output diode current ratings are observed.

Note 3: Unused inputs must be held HIGH or LOW. They may not float.

DC Electrical Characteristics

Symbol	Parameter	V_{CC} (V)	T_A = −40°C to +85°C Min	Typ (Note 5)	Max	T_A = +25°C Min	Typ	Max	Units	Conditions
V_{IH}	HIGH Level Input Voltage	1.65 to 1.95	0.75 V_{CC}						V	
		2.3 to 5.5	0.7 V_{CC}							
V_{IL}	LOW Level Input Voltage	1.65 to 1.95			0.25 V_{CC}				V	
		2.3 to 5.5			0.3 V_{CC}					
I_{IN}	Control Input Leakage Current	0 to 5.5		±0.05	±1.0				μA	$0 \le V_{IN} \le 5.5V$
I_{OFF}	OFF Leakage Current	1.65 to 5.5		±0.05	±10.0				μA	$0 \le A, B \le V_{CC}$
R_{ON}	Switch On Resistance (Note 4)	4.5		3.0	7.0				Ω	V_{IN} = 0V, I_{IN} = 30 mA
				5.0	12.0					V_{IN} = 2.4V, I_{IN} = 15 mA
				7.0	15.0					V_{IN} = 4.5V, I_{IN} = 30 mA
		3.0		4.0	9.0					V_{IN} = 0V, I_{IN} = 24 mA
				10.0	20.0					V_{IN} = 3V, I_{IN} = 24 mA
		2.3		5.0	12.0					V_{IN} = 0V, I_{IN} = 8 mA
				13.0	30.0					V_{IN} = 2.3V, I_{IN} = 8 mA
		1.8		7.0	28.0					V_{IN} = 0V, I_{IN} = 4 mA
				25.0	60.0					V_{IN} = 1.8V, I_{IN} = 4 mA
R_{flat}	On Resistance Flatness (Note 4)(Note 6)(Note 7)	5.0					6.0		Ω	I_A = −30 mA, $0 \le V_{Bn} \le V_{CC}$
		3.3					12.0			I_A = −24 mA, $0 \le V_{Bn} \le V_{CC}$
		2.5					28.0			I_A = −8 mA, $0 \le V_{Bn} \le V_{CC}$
		1.8					125			I_A = −4 mA, $0 \le V_{Bn} \le V_{CC}$
I_{CC}	Quiescent Supply Current	1.65 to 5.5		0.05	10.0				μA	V_{IN} = V_{CC} or GND I_{OUT} = 0

Note 4: Measured by the voltage drop between A and B pins at the indicated current through the switch. On Resistance is determined by the lower of the voltages on the two (A or B) pins.

Note 5: All typical values are at the specified V_{CC}, and T_A = 25°C.

Note 6: Parameter is characterized but not tested in production.

Note 7: Flatness is defined as the difference between the maximum and minimum value of On Resistance over the specified range of conditions.

AC Electrical Characteristics

Symbol	Parameter	V_{CC} (V)	T_A = −40°C to +85°C, C_L = 50 pF, RU = RD = 500Ω Min	Typ (Note 8)	Max	Units	Conditions	Figure Number
t_{PHL}, t_{PLH}	Propagation Delay Bus to Bus (Note 9)	1.65 to 1.95			4.3		V_{IN} = OPEN	Figures 1, 2
		2.3-2.7			1.2	ns		
		3.0-3.6			0.8	ns		
		4.5-5.5			0.3	ns		
t_{PZL}, t_{PZH}	Output Enable Time	1.65 to 1.95	1.5	7.0	14.2		V_{IN} = 2 x V_{CC} for t_{PZL} V_{IN} = 0V for t_{PZH}	Figures 1, 2
		2.3-2.7	1.5	3.3	7.0	ns		
		3.0-3.6	1.5	2.4	5.5	ns		
		4.5-5.5	1.5	2.0	4.5	ns		
t_{PLZ}, t_{PHZ}	Output Disable Time	1.65 to 1.95	1.5	9.2	18.2		V_{IN}= 2 x V_{CC} for t_{PLZ} V_{IN} = 0V for t_{PHZ}	Figures 1Figure 2
		2.3-2.7	1.5	5.3	9.0	ns		
		3.0-3.6	1.5	4.0	7.0	ns		
		4.5-5.5	1.5	2.7	5.0	ns		

Note 8: All typical values are at the specified V_{CC}, and T_A = 25°C.

Note 9: This parameter is guaranteed by design but is not tested. The switch contributes no propagation delay other than the RC delay of the typical On Resistance of the switch and the 50 pF load capacitance, when driven by an ideal voltage source (zero output impedance).

Capacitance

Symbol	Parameter	Typ	Max	Units	Conditions
C_{IN}	Control Pin Input Capacitance	2		pF	V_{CC} = 0V
$C_{I/O}$	Input/Output Capacitance	6		pF	V_{CC} = 5.0V

AC Loading and Waveforms

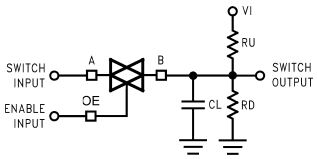

Input driven by 50Ω source terminated in 50Ω

C_L includes load and stray capacitance.

Input PRR = 1.0 MHz; t_w = 500 ns

FIGURE 1. AC Test Circuit

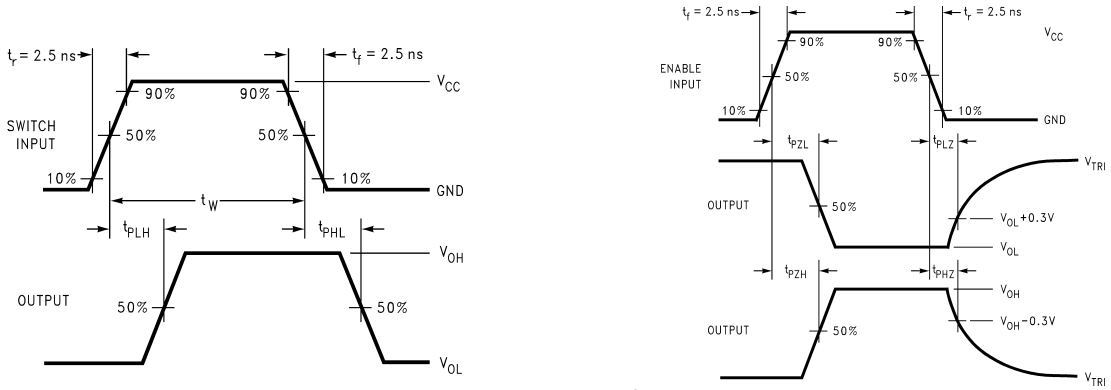

FIGURE 2. AC Waveforms

Tape and Reel Specification

TAPE FORMAT for SOT23 and SC70

Package Designator	Tape Section	Number Cavities	Cavity Status	Cover Tape Status
M5X, P5X	Leader (Start End)	125 (typ)	Empty	Sealed
	Carrier	3000	Filled	Sealed
	Trailer (Hub End)	75 (typ)	Empty	Sealed

TAPE DIMENSIONS inches (millimeters)

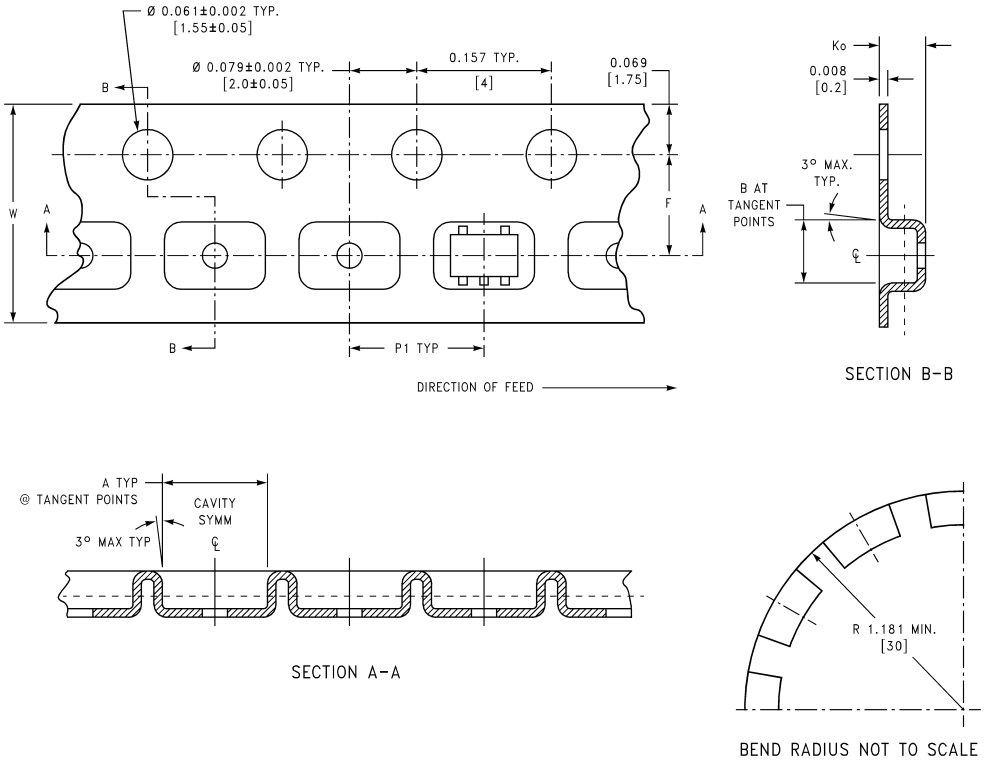

Package	Tape Size	DIM A	DIM B	DIM F	DIM K_o	DIM P1	DIM W
SC70-5	8 mm	0.093 (2.35)	0.096 (2.45)	0.138 ± 0.004 (3.5 ± 0.10)	0.053 ± 0.004 (1.35 ± 0.10)	0.157 (4)	0.315 ± 0.004 (8 ± 0.1)
SOT23-5	8 mm	0.130 (3.3)	0.130 (3.3)	0.138 ± 0.002 (3.5 ± 0.05)	0.055 ± 0.004 (1.4 ± 0.11)	0.157 (4)	0.315 ± 0.012 (8 ± 0.3)

TAPE FORMAT for MicroPak

Package Designator	Tape Section	Number Cavities	Cavity Status	Cover Tape Status
L6X	Leader (Start End)	125 (typ)	Empty	Sealed
	Carrier	5000	Filled	Sealed
	Trailer (Hub End)	75 (typ)	Empty	Sealed

TAPE DIMENSIONS inches (millimeters)

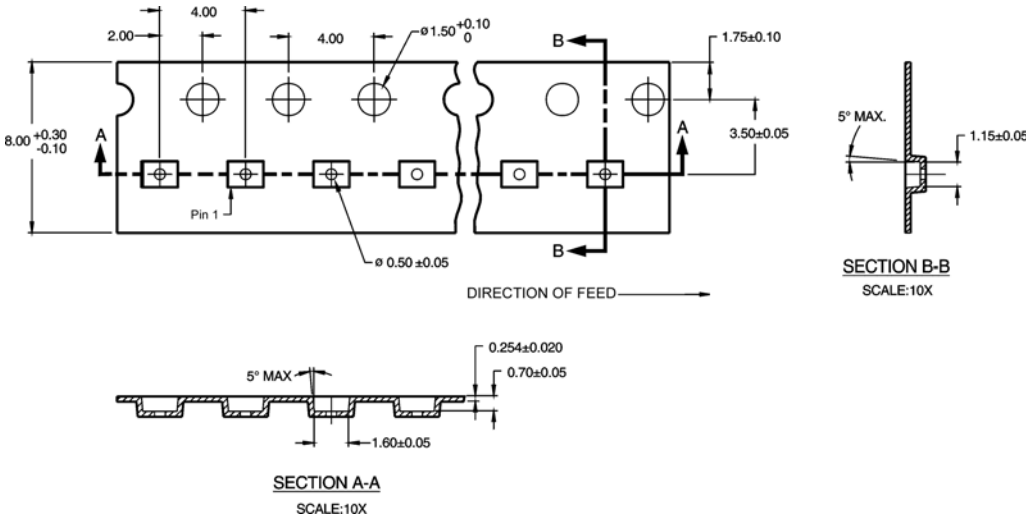

REEL DIMENSIONS inches (millimeters)

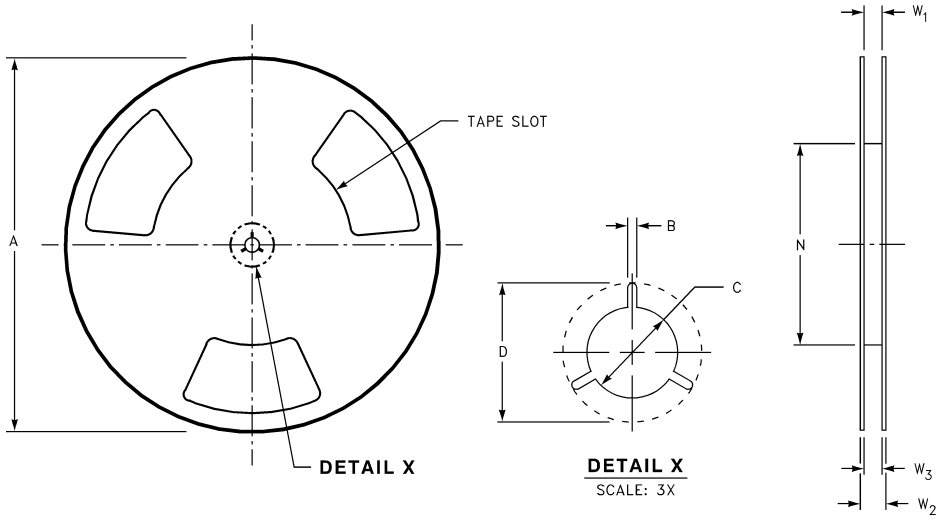

Tape Size	A	B	C	D	N	W1	W2	W3
8 mm	7.0 (177.8)	0.059 (1.50)	0.512 (13.00)	0.795 (20.20)	2.165 (55.00)	0.331 + 0.059/−0.000 (8.40 + 1.50/−0.00)	0.567 (14.40)	W1 + 0.078/−0.039 (W1 + 2.00/−1.00)

Physical Dimensions inches (millimeters) unless otherwise noted

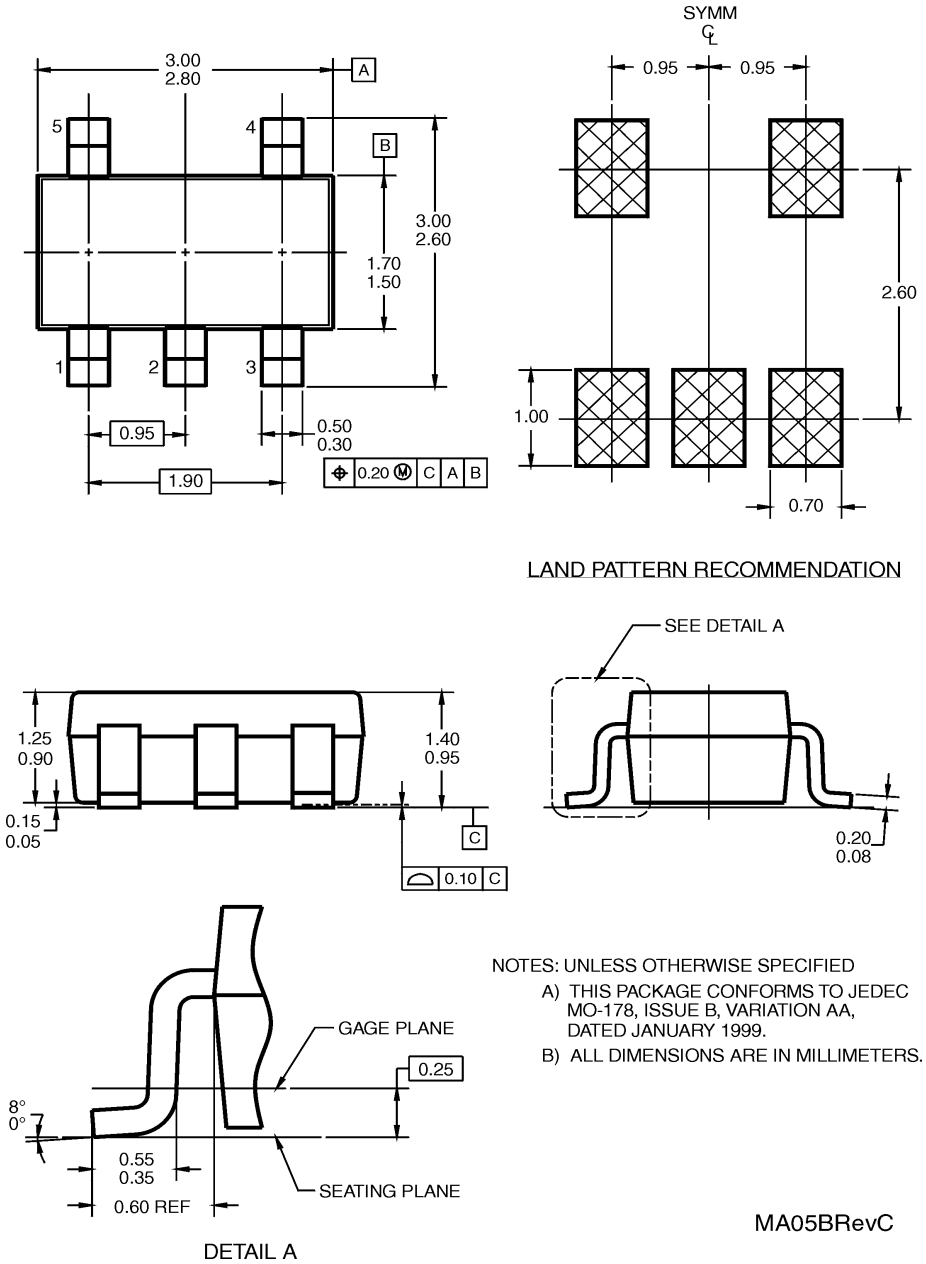

NOTES: UNLESS OTHERWISE SPECIFIED

A) THIS PACKAGE CONFORMS TO JEDEC MO-178, ISSUE B, VARIATION AA, DATED JANUARY 1999.

B) ALL DIMENSIONS ARE IN MILLIMETERS.

5-Lead SOT23, JEDEC MO-178, 1.6mm
Package Number MA05B

Physical Dimensions inches (millimeters) unless otherwise noted (Continued)

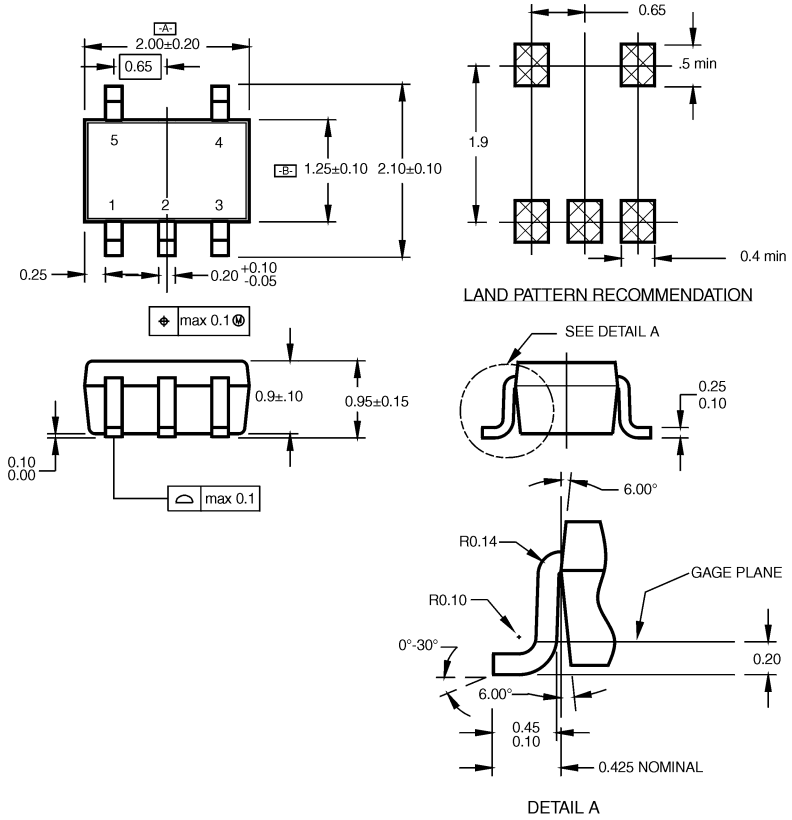

NOTES:

A. CONFORMS TO EIAJ REGISTERED OUTLINE DRAWING SC88A.
B. DIMENSIONS DO NOT INCLUDE BURRS OR MOLD FLASH.
C. DIMENSIONS ARE IN MILLIMETERS.

MAA05ARevC

5-Lead SC70, EIAJ SC-88a, 1.25mm Wide
Package Number MAA05A

Physical Dimensions inches (millimeters) unless otherwise noted (Continued)

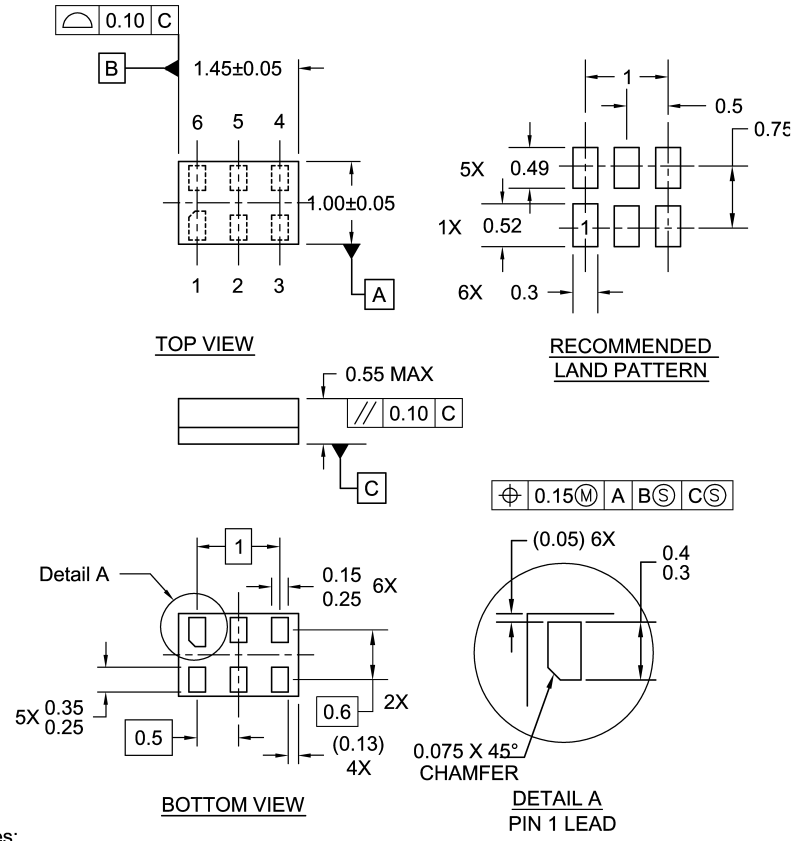

Notes:

1. JEDEC PACKAGE REGISTRATION IS ANTICIPATED
2. DIMENSIONS ARE IN MILLIMETERS
3. DRAWING CONFORMS TO ASME Y14.5M-1994

MAC06ARevB

Pb-Free 6-Lead MicroPak, 1.0mm Wide
Package Number MAC06A

DISCLAIMER

FAIRCHILD SEMICONDUCTOR RESERVES THE RIGHT TO MAKE CHANGES WITHOUT FURTHER NOTICE TO ANY PRODUCTS HEREIN TO IMPROVE RELIABILITY, FUNCTION OR DESIGN. FAIRCHILD DOES NOT ASSUME ANY LIABILITY ARISING OUT OF THE APPLICATION OR USE OF ANY PRODUCT OR CIRCUIT DESCRIBED HEREIN; NEITHER DOES IT CONVEY ANY LICENSE UNDER ITS PATENT RIGHTS, NOR THE RIGHTS OF OTHERS.

LIFE SUPPORT POLICY

FAIRCHILD'S PRODUCTS ARE NOT AUTHORIZED FOR USE AS CRITICAL COMPONENTS IN LIFE SUPPORT DEVICES OR SYSTEMS WITHOUT THE EXPRESS WRITTEN APPROVAL OF FAIRCHILD SEMICONDUCTOR CORPORATION

As used herein:

1. Life support devices or systems are devices or systems which, (a) are intended for surgical implant into the body, or (b) support or sustain life, or (c) whose failure to perform when properly used in accordance with instructions for use provided in the labeling, can be reasonably expected to result in significant injury to the user.

2. A critical component is any component of a life support device or system whose failure to perform can be reasonably expected to cause the failure of the life support device or system, or to affect its safety or effectiveness.

PRODUCT STATUS DEFINITIONS

Definition of terms

Datasheet Identification	Product Status	Definition
Advance Information	Formative or In Design	This datasheet contains the design specifications for product development. Specifications may change in any manner without notice.
Preliminary	First Production	This datasheet contains preliminary data, and supplementary data will be published at a later date. Fairchild Semiconductor reserves the right to make changes at any time without notice in order to improve design.
No Identification Needed	Full Production	This datasheet contains final specifications. Fairchild Semiconductor reserves the right to make changes at any time without notice in order to improve design.
Obsolete	Not In Production	This datasheet contains specifications on a product that has been discontinued by Fairchild Semiconductor. The datasheet is printed for reference information only.