PIHER

According to ELV (2000/53/EC) / RoHS (2002/95/EC)

N-6 6 mm Carbon Potentiometer

FEATURES

- Carbon resistive element
- Polyester substrate
- Over-moulding manufacturing technique
- SMD or through hole
- Embossed Tape (for SMD),Tape on reel, Ammopack and Magazine packaging for automatic insertion and bulk for manual assembly
- Wiper positioned at 50%
- Both sides cross slot easy adjustment
- Accidental rotor movement protected
- Traceability insured through date code marking
- Assembly method: • Stand up
  • Lay down

MECHANICAL SPECIFICATIONS

– Mechanical rotation angle:	280° ± 10°
– Electrical rotation angle:	245° ± 25°
– Torque:	0.2 to 3 Ncm. (0.28 to 4.2 in-oz)
– Stop torque:	> 7.5 Ncm. (10.5 in-oz)

ELECTRICAL SPECIFICATIONS

– Range of values *
100Ω ≤ Rn ≤ 1MΩ (1.0 - 2.0 - 2.2 - 2.5 - 4.7 - 5.0)

– Tolerance: 100Ω ≤ Rn ≤ 1MΩ..... ± 30%

– Max. Voltage: 100 VDC

– Nominal Power 50°C (122°F) (see power rating curve): 0.1W

– Taper: linear

– End resistance: ≤ 2% Rn (10Ω min.)

– Equivalent noise resistance: ≤ 5%

– Operating temperature** :
-25°C + 70°C (-13°F + 158°F)

* Others upon request

** Up to 85°C depending on application

HOW TO ORDER

N 6	L	3 0	T 1	N	1 0 2
Series	Mounting method	Terminal style	Packaging	Crimping	Value
	S = Stand up L = Lay down	25 = 2.5 mm. 30 = 3.0 mm. 50 = 5.0 mm. (See note 1)	T0 = Bulk T1 = Reel ..... A = 20 T2 = Reel ..... A = 21.5 T3 = Ammopack.. A = 20 T4 = Ammopack.. A = 21.5 T5 = Magazine T6 = Magazine..... Sealed for vacuum pickup T7 = Embossed Tape (See note 2)	S = SMD N = Not crimped C = Crimped (See note 3)	101 = 100 Ω ⋮ ⋮ 105 = 1M Ω (See note 4)

NOTES:

(1) - Type "N-6 S" is only available with terminal style "25".
- Terminal style "50" is only available with bulk packing "T0", "T1", "T3", "T5", "T6", "T7"

(2) - Delivery for "T2" and "T4" only available in: N-6 S 25 and N-6 L 30
- "T5", "T6" and "T7" only available in SMD.
- "T7" Embossed Tape 750 Units per Reel. Diameter: 330 mm, aprox. thickness: 30 mm.

(3) - Crimped terminals are only available in bulk packing "T0".
- Type "S" is only available in N-6 L 50 T0, N-6 L 50 T5, N-6 L 50 T6, N-6 L 50 T7

(4) Value: Example: Code: 10 2 = 1 K
2 → Number of zeros
10 → First two digits of the value.

NOTE: The information contained here should be used for reference purposes only.

This project has been financially supported by the Spanish Technological Development Institute (CDTI).

ISO TS 16949 / ISO 14001

MEGGITT

MOUNTING METHOD

Type S

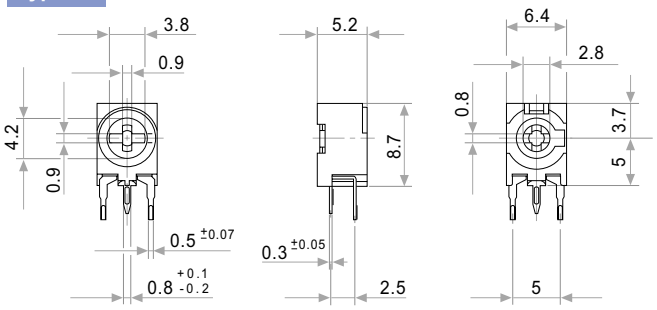

Terminals Side — Collector Side

Type L

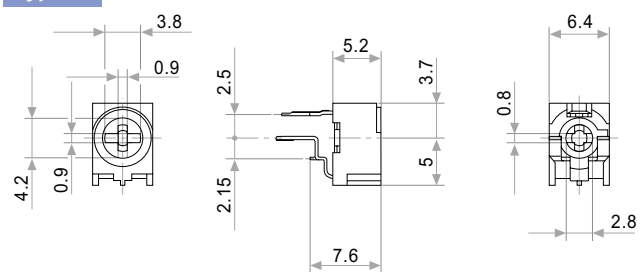

Top — Bottom

TAPE

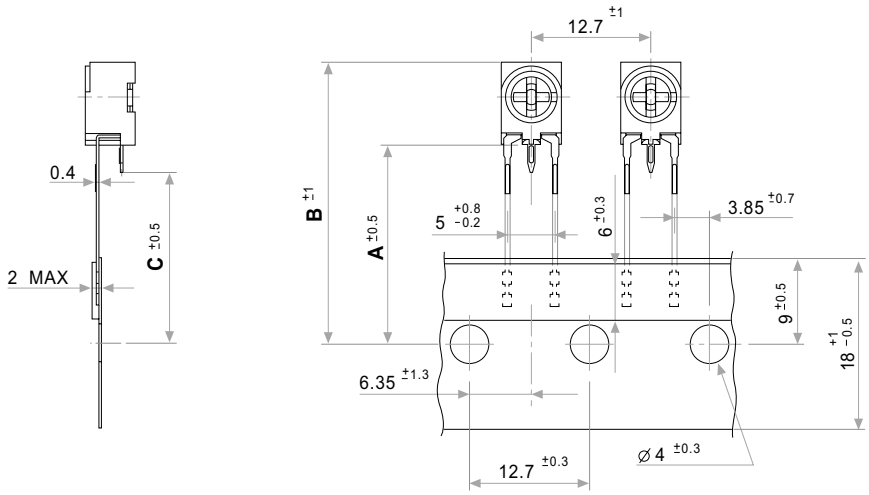

PCB Hole Layout

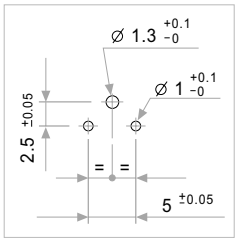

MODEL	A	B	C
N-6 S 25 T1 / T3	20	28.7	17
N-6 S 25 T2 / T4	21.5	30.2	18.5

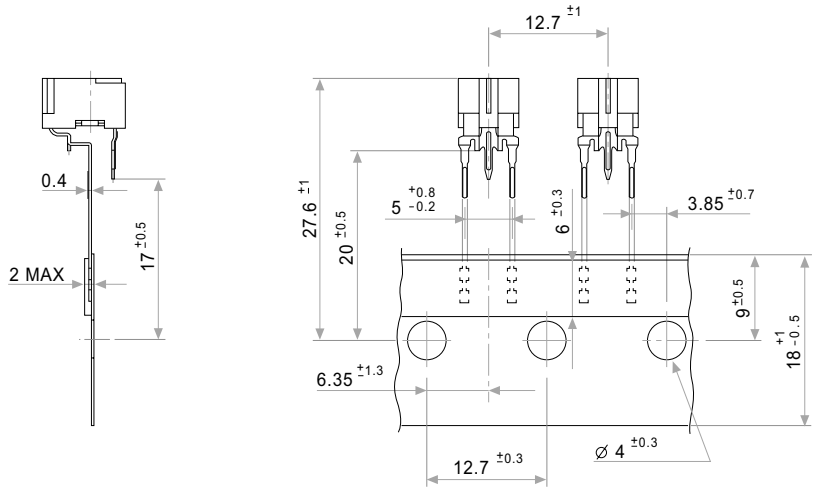

PCB Hole Layout

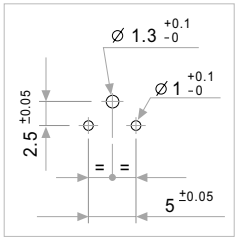

N-6 L 25 T1 / T3

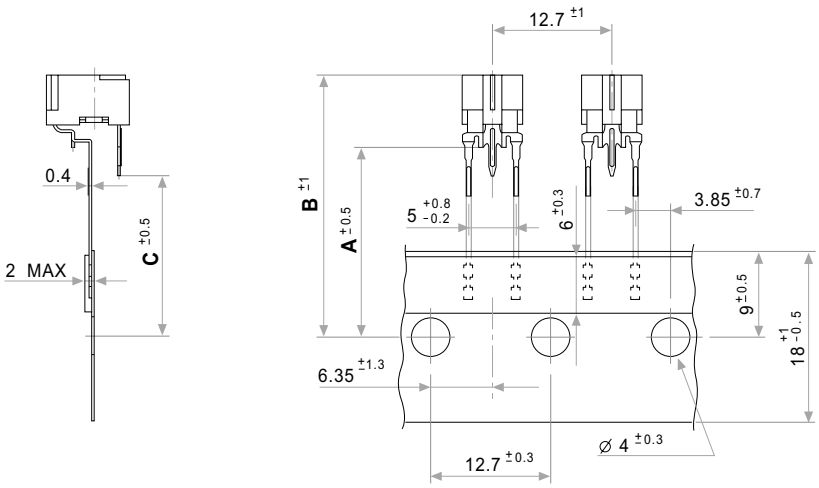

PCB Hole Layout

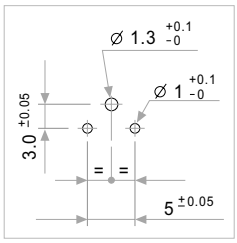

MODEL	A	B	C
N-6 L 30 T1 / T3	20	27.6	17
N-6 L 30 T2 / T4	21.5	29.1	18.5

BULK TYPE L

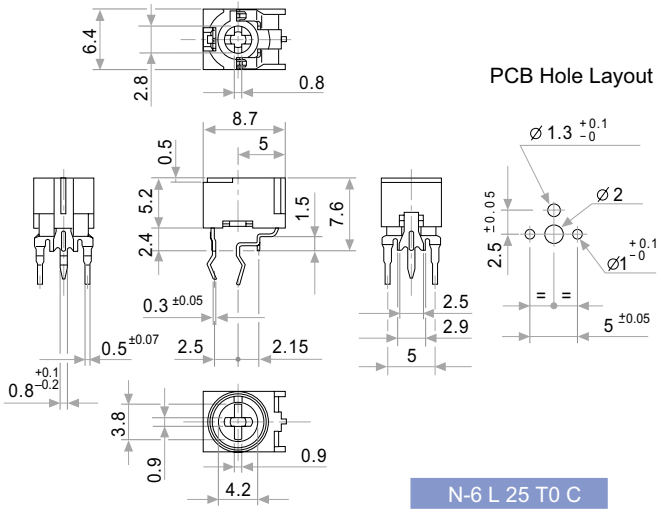

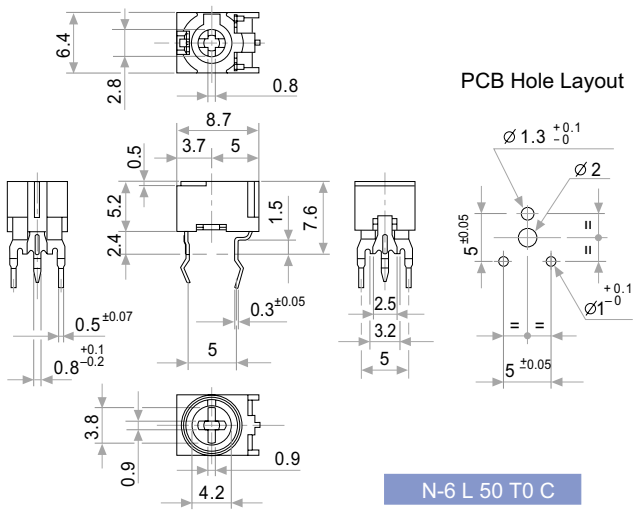

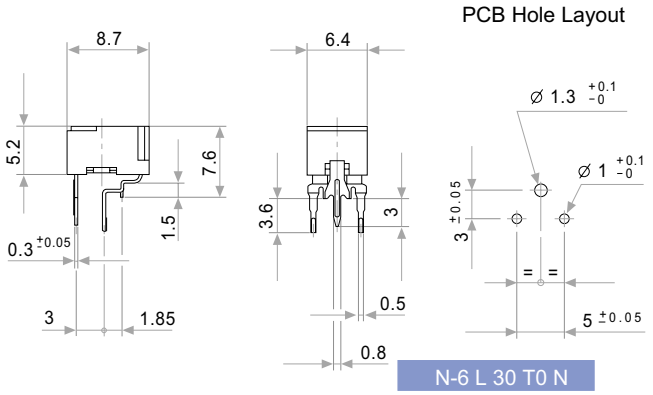

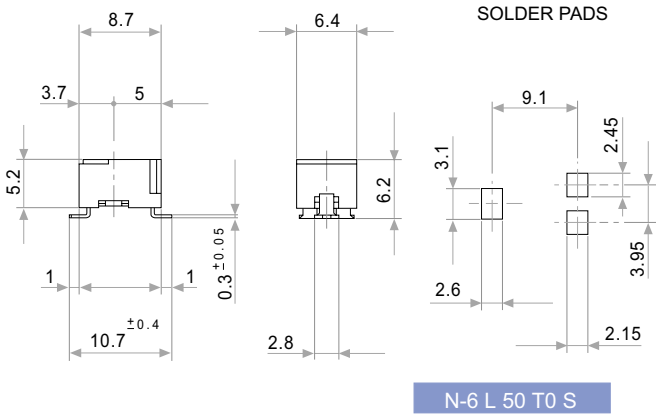

BULK TYPE S

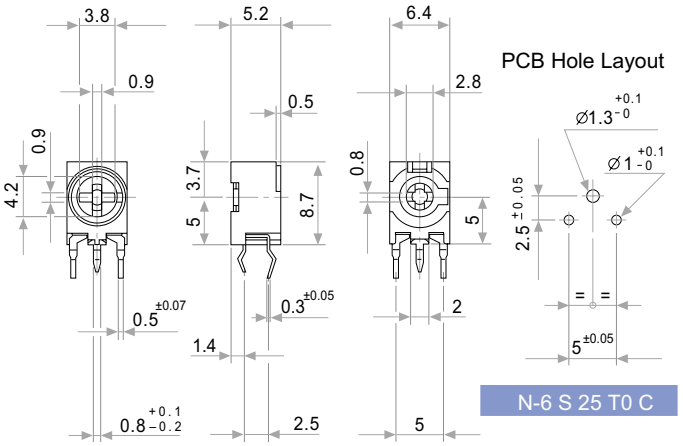

CRIMPING DETAIL "C"

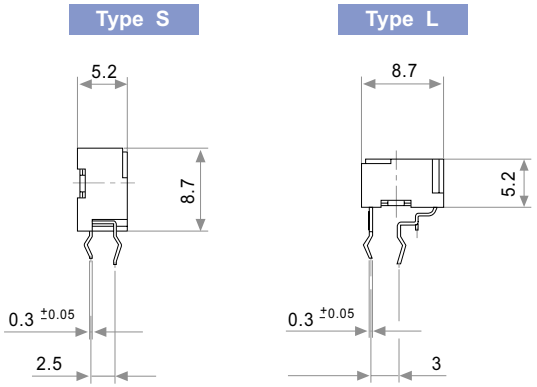

KNOB Ref.: 5680

SHAFT Ref.: 6133

Please order both Knob and Shaft separately

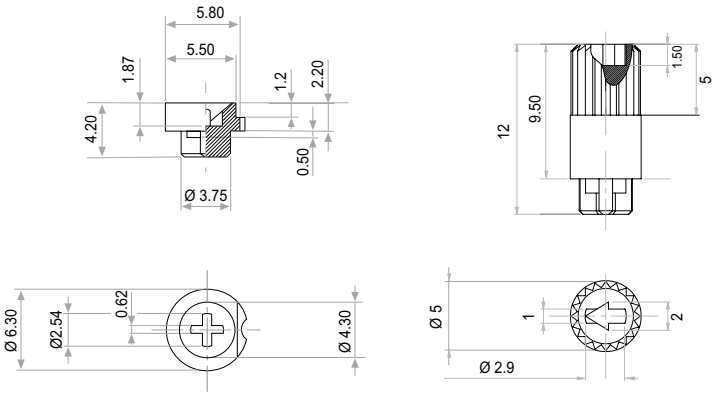

CRIMPING DETAIL

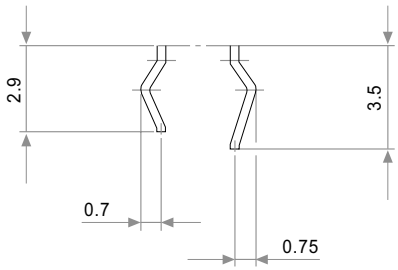

PACKAGING

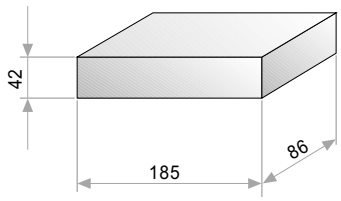

T0 BULK
500 Units per box.

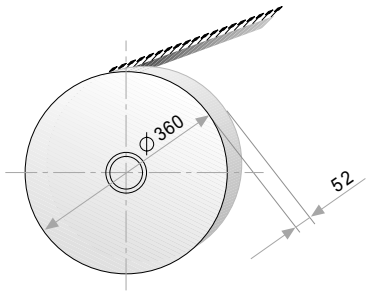

T1 / T2 TAPE ON REEL
Units per Reel according to type:
S: 1.000
L: 750

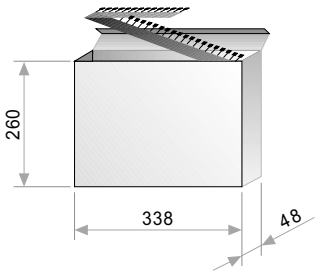

T3 / T4 AMMOPACK
Units per Box according to type.
S: 1.000
L: 750

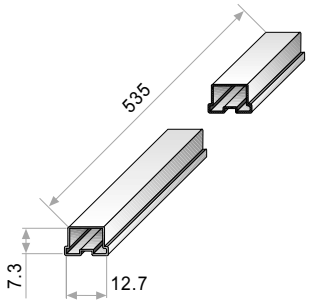

T5 / T6 MAGAZINE
Units per magazine: 80

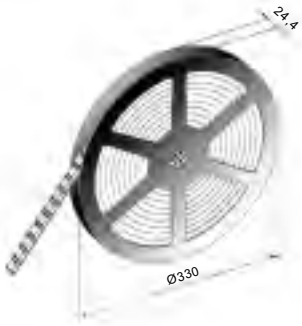

T7 EMBOSSED TAPE
Units per reel: 750

AVAILABLE COMBINATIONS	TAPE				MAGAZINE		EMB.	BULK	
	T1	T2	T3	T4	T5	T6	T7	SMD	CRIMP
N-6 S 25	●	●	●	●					●
N-6 L 25	●		●						●
N-6 L 30	●	●	●	●					●
N-6 L 50	●		●		●	●	●	●	●

TESTS		TYPICAL VARIATIONS
ELECTRICAL LIFE	1.000 h. @ 50°C: 0.1 W	±10 %
MECHANICAL LIFE (CYCLES)	100 @ 10 CPM ...15 CPM	±3 % (Rn < 1 MΩ)
TEMPERATURE COEFFICIENT	–25°C; +70°C	±300 ppm (1K≤ Rn ≤100K)
THERMAL CYCLING	16 h. @ 85°C; 2h. @ –25°C	±5 %
DAMP HEAT	500 h. @ 40°C @ 95% HR	±5 %
VIBRATION (for each plane X,Y,Z)	2 h. @ 10 Hz. ... 55 Hz.	±2 %

NOTE: Out of range values may not comply with these results.
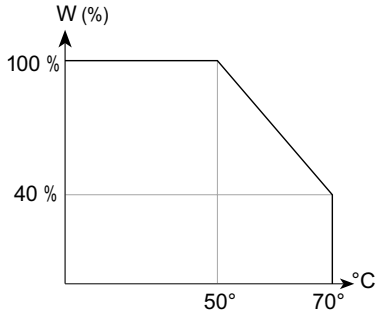
POWER RATING CURVE