DATA SHEET

MSP 34x2G Multistandard Sound Processor Family with Dolby Pro Logic

MICRONAS BASS

DOLBY SURROUND PRO • LOGIC

SRS WOW

Edition June 3, 2003
6251-520-1DS

MICRONAS

Contents

Contents, continued

Contents, continued

Contents, continued

Contents, continued

License Notice:

[1] “Dolby”, “Virtual Dolby Surround”, and the double-D Symbol are trademarks of Dolby Laboratories.

Supply of this implementation of Dolby Technology does not convey a license nor imply a right under any patent, or any other industrial or intellectual property right of Dolby Laboratories, to use this implementation in any finished end-user or ready-to-use final product. Companies planning to use this implementation in products must obtain a license from Dolby Laboratories Licensing Corporation before designing such products.

Multistandard Sound Processor Family with Dolby Pro Logic

Release Note: Revision bars indicate significant changes to the previous edition. The hardware and software description in this document is valid for the MSP 34x2G version B3 and following versions.

1. Introduction

The MSP 34x2G family of single-chip Multistandard Sound Processors covers the sound processing of all analog TV-Standards worldwide, as well as the NICAM digital sound standards. The full TV sound processing, starting with analog sound IF signal-in, down to processed analog AF-out, is performed on a single chip.

The family's latest member, the MSP 34x2G has all functions of the MSP 34x0G with the addition of Dolby Pro Logic and Virtual Dolby Surround sound processing (See License Notice on page 6). The MSP 34x2G forms a superset of the functions of the MSP 34x1G, which contains the virtualizer algorithms but does not contain any multi-channel processing.

Additional output pins DACM_C and DACM_S have been defined which deliver the Dolby Pro Logic processed Center and Surround channels. When DACM_C and DACM_S are active, the headphone outputs DACA_L and DACA_R are muted and vice versa. Simultaneous processing of Headphone signals and Dolby Pro Logic is not possible.

Surround sound can be reproduced to a certain extent with only two loudspeakers. The MSP 34x2G includes a Micronas virtualizer algorithm which has been approved by the Dolby[1)] Laboratories for compliance with the "Virtual Dolby Surround" technology. This algorithm is called 3D-PANORAMA® and enables convincing acoustical sensations. Virtual Dolby Surround can be processed together with headphone signals.

The ICs are produced in submicron CMOS technology. The MSP 34x2G is available in the following packages: PMQFP80-11, PMQFP64-2, and PSDIP64-1.

1.1. Features

- All MSP 34x0G standard features
- All MSP 34x1G standard features:
  - the 3D-PANORAMA® virtualizer algorithm (to be used for Virtual Dolby Surround)
  - the PANORAMA virtualizer algorithm
  - Noise Generator
- Virtualizer able to work with 2 or 3 front loudspeakers
- Dolby Pro Logic processing
- Various other multichannel sound modes
- Additional pins for Center and Surround channels
- Pin and software compatible to MSP 34x0G

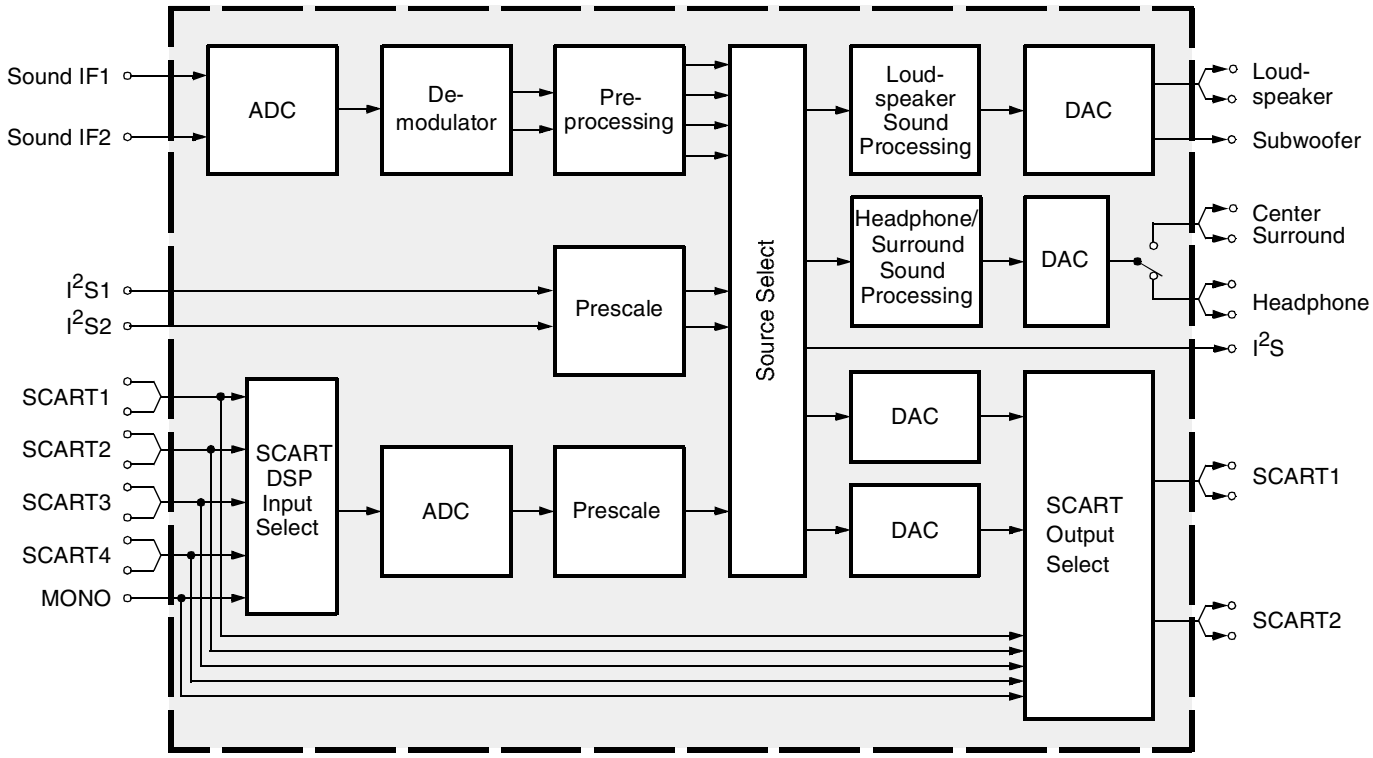

Fig. 1–1: Block diagram of the MSP 34x2G

1.2. Features of the MSP 34x2G Family

Feature	3402	3412	3422	3442	3452
Dolby Pro Logic	X	X	X	X	X
Virtual Dolby Surround Processing with 3D-PANORAMA virtualizer	X	X	X	X	X
PANORAMA virtualizer algorithm	X	X	X	X	X
Standard Selection with single I^2C transmission	X	X	X	X	X
Automatic Standard Detection of terrestrial TV standards/Automatic Carrier Mute function	X	X	X	X	X
Automatic Sound Selection (mono/stereo/bilingual)	X	X	X	X	X
Two selectable sound IF (SIF) inputs	X	X	X	X	X
Interrupt output programmable (indicating status change)	X	X	X	X	X
Loudspeaker / Headphone channel with volume, balance, bass, treble, loudness	X	X	X	X	X
AVC: Automatic Volume Correction	X	X	X	X	X
Subwoofer output with programmable low-pass and complementary high-pass filter	X	X	X	X	X
Micronas BASS (MB) and 5-band graphic equalizer for loudspeaker channel	X	X	X	X	X
Spatial effect for loudspeaker channel	X	X	X	X	X
Four Stereo SCART (line) inputs, one Mono input; two Stereo SCART outputs	X	X	X	X	X
Complete SCART in/out switching matrix	X	X	X	X	X
Two I^2S inputs; one I^2S output	X	X	X	X	X
All analog Mono sound carriers including AM-SECAM L	X	X	X	X	X
All analog FM-Stereo A2 and satellite standards	X	X	x	x	X
Simultaneous demodulation of (very) high-deviation FM-Mono and NICAM		X			X
Adaptive deemphasis for satellite (Wegener-Panda, acc. to ASTRA specification)	X	X			X
ASTRA Digital Radio (ADR) together with DRP 3510A	X	X			X
All NICAM standards		X			X
Demodulation of the BTSC multiplex signal and the SAP channel			X	X	X
Alignment free digital DBX noise reduction for BTSC Stereo and SAP				X	X
Alignment free digital Micronas Noise Reduction (MNR) for BTSC Stereo and SAP			X		
BTSC stereo separation (MSP 3422/42G also EIA-J) significantly better than spec.			X	X	X
SAP and stereo detection for BTSC system			X	X	X
Korean FM-Stereo A2 standard	X	X	X	X	X
Alignment-free Japanese standard EIA-J			X	X	X
Demodulation of the FM-Radio multiplex signal			X	X	X

1.3. MSP 34x2G Version List

Version	Status	Description
MSP 3402G	not confirmed	FM Stereo (A2) Version
MSP 3412G	available	NICAM and FM Stereo (A2) Version
MSP 3422G	not confirmed	NTSC Version (A2 Korea, BTSC with Micronas Noise Reduction (MNR), and Japanese EIA-J system)
MSP 3442G	not confirmed	NTSC Version (A2 Korea, BTSC with DBX noise reduction, and Japanese EIA-J system)
MSP 3452G	available	Global Version (all sound standards)

1.4. MSP 34x2G Versions and their Application Fields

Table 1–1 provides an overview of TV sound standards that can be processed by the MSP 34x2G family. In addition, the MSP 34x2G is able to handle the FM-Radio standard. With the MSP 34x2G, a complete multimedia receiver covering all TV sound standards together with terrestrial/cable and satellite radio sound can be built; even ASTRA Digital Radio can be processed (with a DRP 3510A coprocessor).

Table 1–1: TV Stereo Sound Standards covered by the MSP 34x2G IC Family (details see Appendix A)

MSP Version				TV-System	Position of Sound Carrier /MHz	Sound Modulation	Color System	Broadcast e.g. in:
3402			3452	B/G	5.5/5.7421875	FM-Stereo (A2)	PAL	Germany
					5.5/5.85	FM-Mono/NICAM	PAL	Scandinavia, Spain
				L	6.5/5.85	AM-Mono/NICAM	SECAM-L	France
				I	6.0/6.552	FM-Mono/NICAM	PAL	UK, Hong Kong
3402		3412		D/K	6.5/6.2578125	FM-Stereo (A2, D/K1)	SECAM-East	Slovak. Rep.
					6.5/6.7421875	FM-Stereo (A2, D/K2)	PAL	currently no broadcast
					6.5/5.7421875	FM-Stereo (A2, D/K3)	SECAM-East	Poland
					6.5/5.85	FM-Mono/NICAM (D/K, NICAM)	PAL	China, Hungary
3402				Satellite	6.5 7.02/7.2 7.38/7.56 etc.	FM-Mono FM-Stereo ASTRA Digital Radio (ADR) with DRP 3510A	PAL	Europe Sat. ASTRA
	3422, 3442			M/N	4.5/4.724212	FM-Stereo (A2)	NTSC	Korea
					4.5	FM-FM (EIA-J)	NTSC	Japan
					4.5	BTSC-Stereo + SAP	NTSC, PAL	USA, Argentina
				FM-Radio	10.7	FM-Stereo Radio		USA, Europe

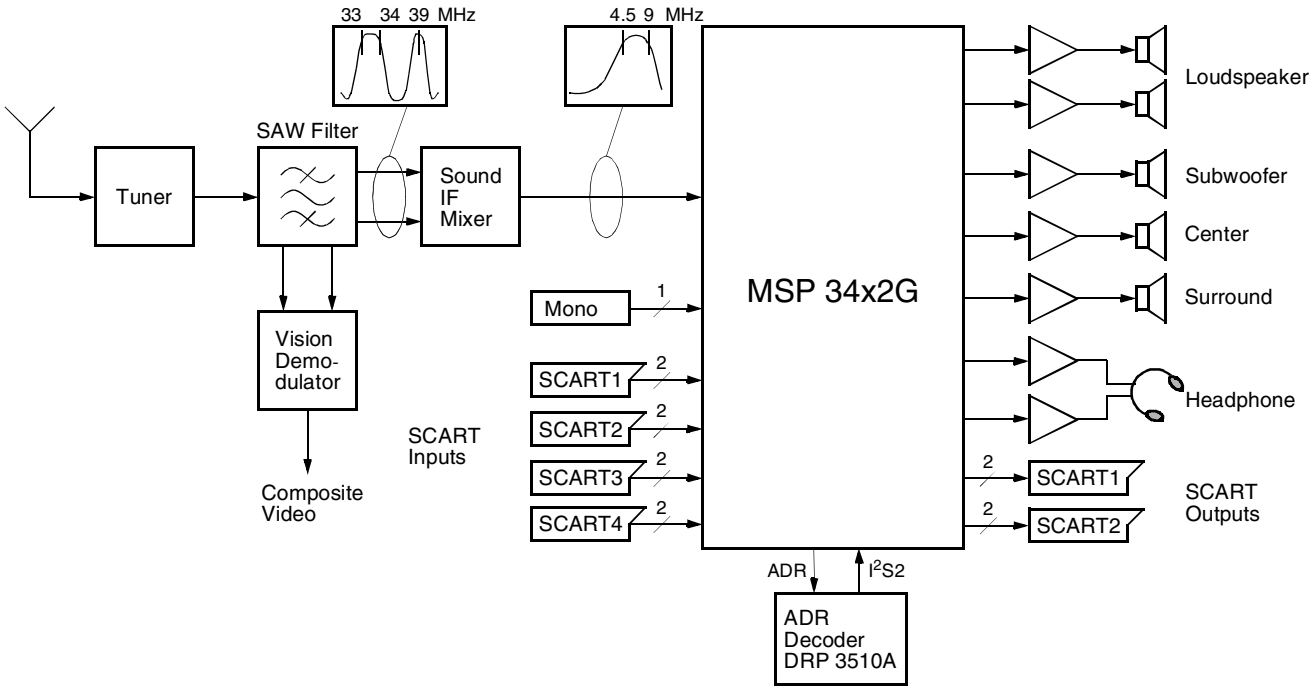

Fig. 1–2: Typical MSP 34x2G application

2. Functional Description

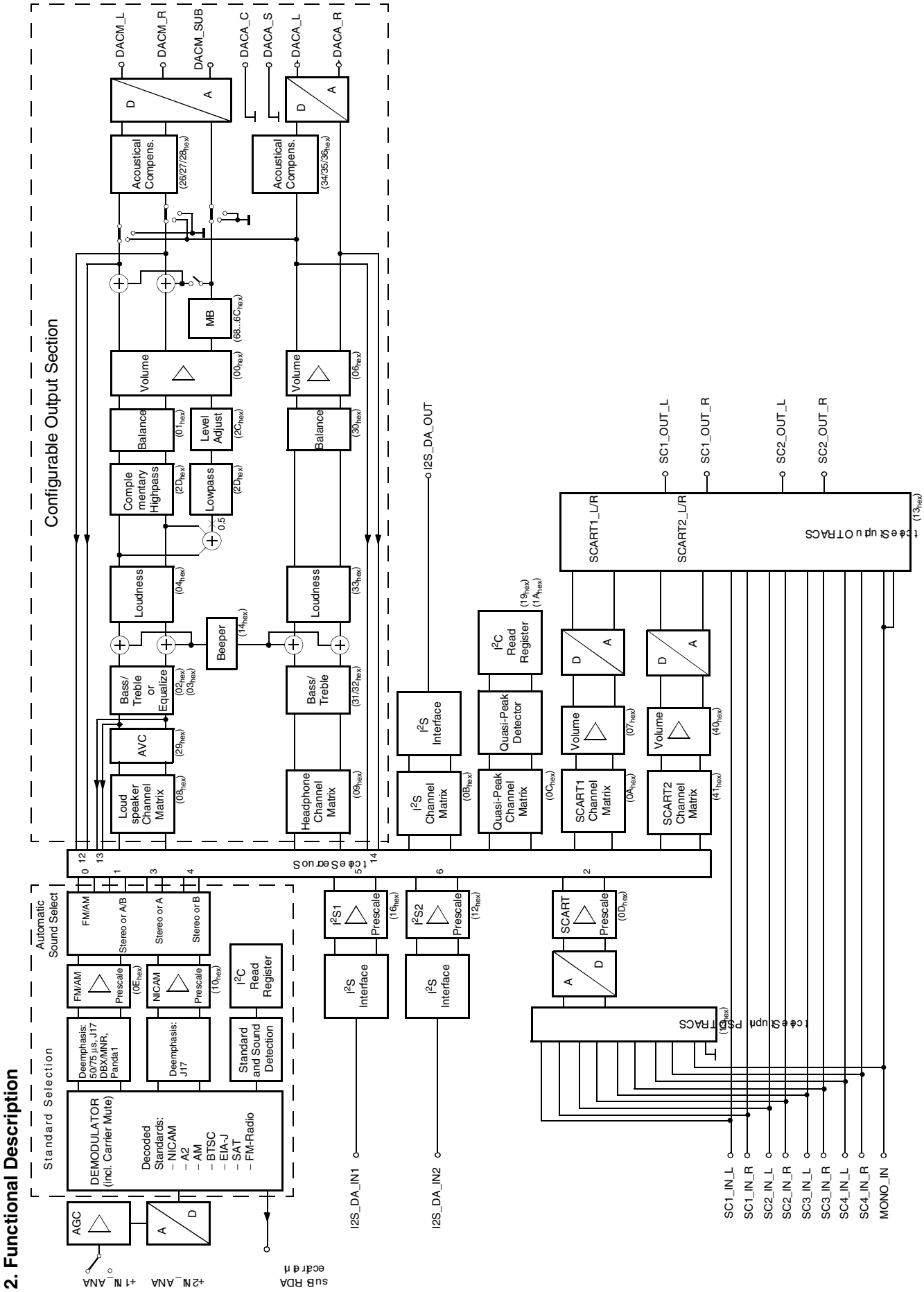

Fig. 2–1: Signal flow block diagram of the MSP 34x2G

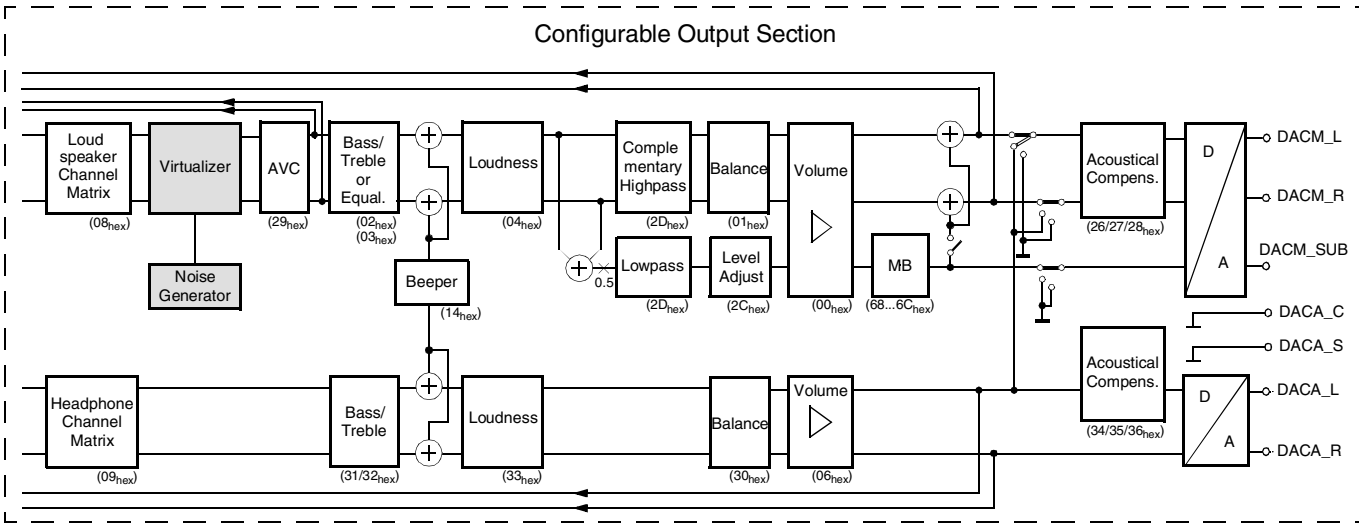

Fig. 2–2: Output section in virtual mode: Output Configuration (register 48_{hex}) = 0100_{hex}

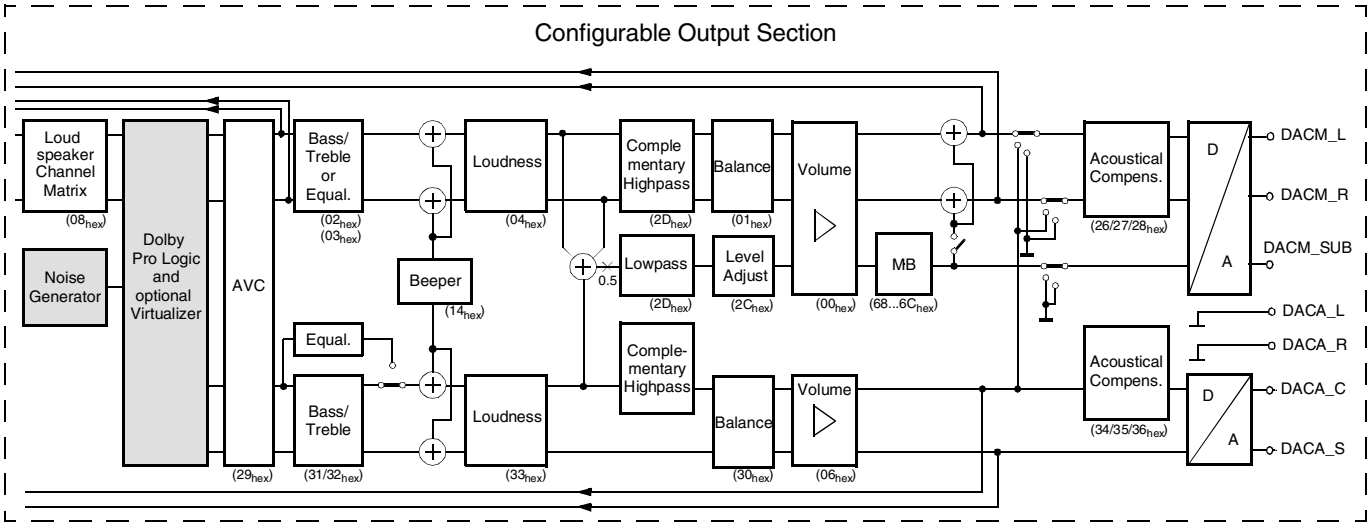

Fig. 2–3: Output section with multi-channel surround: Output Configuration (register 48_{hex}) = 8200_{hex}

2.1. Architecture of the MSP 34x2G Family

The block diagrams in Fig. 2–1, Fig. 2–2, and Fig. 2–3 show the signal flow in the MSP 34x2G in three modes that can be set in the Output Configuration register.

– Standard mode (see Fig. 2–1).
  The IC is compatible to the MSP 34x0G family.
– Virtual mode (see Fig. 2–2).
  The IC is compatible to the Virtual Dolby MSP 34x1G family.
– Multi-channel mode (see Fig. 2–3).

The three block diagrams show the features of the MSP 34x2G family member.

Other members of the MSP 34x2G family do not have the complete set of features: The demodulator handles only a subset of the standards presented in the demodulator block; NICAM processing is only possible in the MSP 3412G and MSP 3452G.

2.2. Sound IF Processing

2.2.1. Analog Sound IF Input

The input pins ANA_IN1+, ANA_IN2+, and ANA_IN– offer the possibility to connect two different sound IF (SIF) sources to the MSP 34x2G. The analog-to-digital conversion of the preselected sound IF signal is done by an A/D-converter. An analog automatic gain circuit (AGC) allows a wide range of input levels. The high-pass filters formed by the coupling capacitors at pins ANA_IN1+ and ANA_IN2+ see Section 7.2. “Application Circuit” on page 112 are sufficient in most cases to suppress video components. Some combinations of SAW filters and sound IF mixer ICs, however, show large picture components on their outputs. In this case, further filtering is recommended.

2.2.2. Demodulator: Standards and Features

The MSP 34x2G is able to demodulate all TV-sound standards worldwide including the digital NICAM system. Depending on the MSP 34x2G version, the following demodulation modes can be performed:

A2 Systems: Detection and demodulation of two separate FM carriers (FM1 and FM2), demodulation and evaluation of the identification signal of carrier FM2.

NICAM Systems: Demodulation and decoding of the NICAM carrier, detection and demodulation of the analog (FM or AM) carrier. For D/K-NICAM, the FM carrier may have a maximum deviation of 384 kHz.

Very high deviation FM-Mono: Detection and robust demodulation of one FM carrier with a maximum deviation of 540 kHz.

BTSC-Stereo: Detection and FM demodulation of the aural carrier resulting in the MTS/MPX signal. Detection and evaluation of the pilot carrier, AM demodulation of the (L–R)-carrier and detection of the SAP subcarrier. Processing of DBX noise reduction or Micronas Noise Reduction (MNR).

BTSC-Mono + SAP: Detection and FM demodulation of the aural carrier resulting in the MTS/MPX signal. Detection and evaluation of the pilot carrier, detection and FM demodulation of the SAP subcarrier. Processing of DBX noise reduction or Micronas Noise Reduction (MNR).

Japan Stereo: Detection and FM demodulation of the aural carrier resulting in the MPX signal. Demodulation and evaluation of the identification signal and FM demodulation of the (L–R)-carrier.

FM-Satellite Sound: Demodulation of one or two FM carriers. Processing of high-deviation mono or narrow bandwidth mono, stereo, or bilingual satellite sound according to the ASTRA specification.

FM-Stereo-Radio: Detection and FM demodulation of the aural carrier resulting in the MPX signal. Detection and evaluation of the pilot carrier and AM demodulation of the (L–R)-carrier.

The demodulator blocks of all MSP 34x2G versions have identical user interfaces. Even completely different systems like the BTSC and NICAM systems are controlled the same way. Standards are selected by means of MSP Standard Codes. Automatic processes handle standard detection and identification without controller interaction. The key features of the MSP 34x2G demodulator blocks are

Standard Selection: The controlling of the demodulator is minimized: All parameters, such as tuning frequencies or filter bandwidth, are adjusted automatically by transmitting one single value to the STANDARD SELECT register. For all standards, specific MSP standard codes are defined.

Automatic Standard Detection: If the TV sound standard is unknown, the MSP 34x2G can automatically detect the actual standard, switch to that standard, and respond the actual MSP standard code.

Automatic Carrier Mute: To prevent noise effects or FM identification problems in the absence of an FM carrier, the MSP 34x2G offers a configurable carrier mute feature, which is activated automatically if the TV sound standard is selected by means of the STANDARD SELECT register. If no FM carrier is detected at one of the two MSP demodulator channels, the corresponding demodulator output is muted. This is indicated in the STATUS register.

2.2.3. Preprocessing of Demodulator Signals

The NICAM signals must be processed by a deemphasis filter and adjusted in level. The analog demodulated signals must be processed by a deemphasis filter, adjusted in level, and dematrixed. The correct deemphasis filters are already selected by setting the standard in the STANDARD SELECT register. The level adjustment has to be done by means of the FM/AM and NICAM prescale registers. The necessary dematrix function depends on the selected sound standard and the actual broadcasted sound mode (mono, stereo, or bilingual). It can be manually set by the FM Matrix Mode register or automatically set by the Automatic Sound Selection.

2.2.4. Automatic Sound Select

In the Automatic Sound Select mode, the dematrix function is automatically selected based on the identification information in the STATUS register. No I^2C interaction is necessary when the broadcasted sound mode changes (e.g. from mono to stereo).

The demodulator supports the identification check by switching between mono compatible standards (standards that have the same FM mono carrier) automatically and non-audible. If B/G-FM or B/G-NICAM is selected, the MSP will switch between these standards. The same action is performed for the standards: D/K1-FM, D/K2-FM, D/K3-FM and D/K-NICAM. Switching is only done in the absence of any stereo or bilingual identification. If identification is found, the MSP keeps the detected standard.

In case of high bit-error rates, the MSP 34x2G automatically falls back from digital NICAM sound to analog FM or AM mono.

Table 2–1 summarizes all actions that take place when Automatic Sound Select is switched on.

To provide more flexibility, the Automatic Sound Select block prepares four different source channels of demodulated sound (see Fig. 2–4). By choosing one of the four demodulator channels, the preferred sound mode can be selected for each of the output channels (loudspeaker, headphone, etc.). This is done by means of the Source Select registers.

The following source channels of demodulated sound are defined:

– **“FM/AM” channel:** Analog mono sound, stereo if available. In case of NICAM, analog mono only (FM or AM mono).

– **“Stereo or A/B” channel:** Analog or digital mono sound, stereo if available. In case of bilingual broadcast, it contains both languages A (left) and B (right).

– **“Stereo or A” channel:** Analog or digital mono sound, stereo if available. In case of bilingual broadcast, it contains language A (on left and right).

– **“Stereo or B” channel:** Analog or digital mono sound, stereo if available. In case of bilingual broadcast, it contains language B (on left and right).

Fig. 2–4 and Table 2–2 show the source channel assignment of the demodulated signals in case of Automatic Sound Select mode for all sound standards.

Note: The analog primary input channel contains the signal of the mono FM/AM carrier or the L+R signal of the MPX carrier. The secondary input channel contains the signal of the second FM carrier, the L–R signal of the MPX carrier, or the SAP signal.

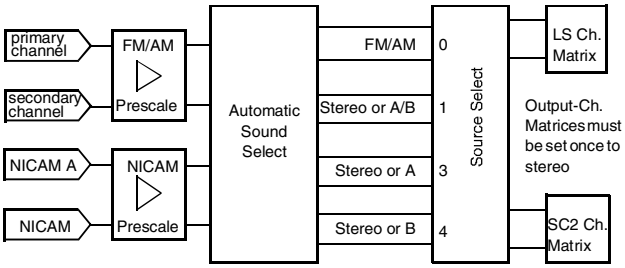

Fig. 2–4: Source channel assignment of demodulated signals in Automatic Sound Select Mode

2.2.5. Manual Mode

Fig. 2–5 shows the source channel assignment of demodulated signals in case of manual mode. If manual mode is required, more information can be found in Section 6.7. “Demodulator Source Channels in Manual Mode” on page 109.

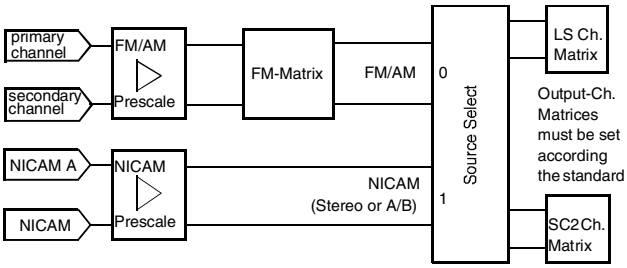

Fig. 2–5: Source channel assignment of demodulated signals in Manual Mode

Table 2–1: Performed actions of the Automatic Sound Selection

Selected TV Sound Standard	Performed Actions
B/G-FM, D/K-FM, M-Korea, and M-Japan	Evaluation of the identification signal and automatic switching to mono, stereo, or bilingual. Preparing four demodulator source channels according to Table 2–2.
B/G-NICAM, L-NICAM, I-NICAM, and D/K-NICAM	Evaluation of NICAM-C-bits and automatic switching to mono, stereo, or bilingual. Preparing four demodulator source channels according to Table 2–2.
	In case of bad or no NICAM reception, the MSP switches automatically to FM/AM mono and switches back to NICAM if possible. A hysteresis prevents periodical switching.
B/G-FM, B/G-NICAM or D/K1-FM, D/K2-FM, D/K3-FM, and D/K-NICAM	Automatic searching for stereo/bilingual-identification in case of mono transmission. Automatic and non-audible changes between Dual-FM and FM-NICAM standards while listening to the basic FM-Mono sound carrier. Example: If starting with B/G-FM-Stereo, there will be a periodical alternation to B/G-NICAM in the absence of FM-Stereo/Bilingual or NICAM-identification. Once an identification is detected, the MSP keeps the corresponding standard.
BTSC-STEREO, FM Radio	Evaluation of the pilot signal and automatic switching to mono or stereo. Preparing four demodulator source channels according to Table 2–2. Detection of the SAP carrier.
BTSC-SAP	In the absence of SAP, the MSP switches to BTSC-Stereo if available. If SAP is detected, the MSP switches automatically to SAP (see Table 2–2).

Table 2–2: Sound modes for the demodulator source channels with Automatic Sound Select

			Source Channels in Automatic Sound Select Mode			
Broadcasted Sound Standard	**Selected MSP Standard Code**[3]	**Broadcasted Sound Mode**	**FM/AM** (source select: 0)	**Stereo or A/B** (source select: 1)	**Stereo or A** (source select: 3)	**Stereo or B** (source select: 4)
M-Korea B/G-FM D/K-FM M-Japan	02 03, 08[1] 04, 05, 07, 0B[1] 30	MONO	Mono	Mono	Mono	Mono
		STEREO	Stereo	Stereo	Stereo	Stereo
		BILINGUAL: Languages A and B	Left = A Right = B	Left = A Right = B	A	B
B/G-NICAM L-NICAM I-NICAM D/K-NICAM D/K-NICAM (with high deviation FM)	08, 03[2] 09 0A 0B, 04[2], 05[2] 0C, OD	NICAM not available or error rate too high	analog Mono	analog Mono	analog Mono	analog Mono
		MONO	analog Mono	NICAM Mono	NICAM Mono	NICAM Mono
		STEREO	analog Mono	NICAM Stereo	NICAM Stereo	NICAM Stereo
		BILINGUAL: Languages A and B	analog Mono	Left = NICAM A Right = NICAM B	NICAM A	NICAM B
BTSC	20, 21	MONO	Mono	Mono	Mono	Mono
		STEREO	Stereo	Stereo	Stereo	Stereo
	20	MONO+SAP	Mono	Mono	Mono	Mono
		STEREO+SAP	Stereo	Stereo	Stereo	Stereo
	21	MONO+SAP	Left = Mono Right = SAP	Left = Mono Right = SAP	Mono	SAP
		STEREO+SAP	Left = Mono Right = SAP	Left = Mono Right = SAP	Mono	SAP
FM Radio	40	MONO	Mono	Mono	Mono	Mono
		STEREO	Stereo	Stereo	Stereo	Stereo

[1] The Automatic Sound Select process will automatically switch to the mono compatible analog standard.
[2] The Automatic Sound Select process will automatically switch to the mono compatible digital standard.
[3] The MSP Standard Codes are defined in Table 3–7 on page 29.

2.3. Preprocessing for SCART and I^2S Input Signals

The SCART and I^2S inputs need only be adjusted in level by means of the SCART and I^2S prescale registers.

2.4. Source Selection and Output Channel Matrix

The Source Selector makes it possible to distribute all source signals (one of the demodulator source channels, SCART, or I^2S input) to the desired output channels (loudspeaker, headphone, etc.). All input and output signals can be processed simultaneously. Each source channel is identified by a unique source address.

For each output channel, the sound mode can be set to sound A, sound B, stereo, or mono by means of the output channel matrix.

If Automatic Sound Select is on, the output channel matrix can stay fixed to stereo (transparent) for demodulated signals.

2.5. Audio Baseband Processing

2.5.1. SRS WOW (optional)

License Notice: SRS, SRS WOW, and the SRS Logo are trademarks of SRS Labs, Inc. A license from SRS Labs, Inc. is required before an SRS-version of the MSP 34x2G can be purchased.

SRS Labs' WOW technology enlarges the sound image field and improves the bass performance of television speakers. Manufacturers can save costs by licensing WOW while utilizing smaller speakers and still provide a higher quality audio experience.

WOW consists of three sections:

- Clarity Improvement,
- 3D-Audio (SRS, Sound Retrieval System), and
- Bass Enhancement (TruBass).

Key features of WOW include:

- Wider and taller sound image field
- Larger sweet spot
- Deep, rich bass tones
- Quality improvements to audio listening experience
- Improved clarity of speech

All MSP 34x2G are shipped without SRS except otherwise ordered. When an SRS-version of MSP 34x2G is ordered, it carries a special marking on the chip for identification. The SRS WOW functionality must be enabled by writing a "license key" into the MSP 34x2G. For information on how to obtain this license key from Micronas, please contact your Micronas sales representative.

2.5.2. Automatic Volume Correction (AVC)

Different sound sources (e.g. terrestrial channels, SAT channels, or SCART) fairly often do not have the same volume level. Advertisements during movies usually have a higher volume level than the movie itself. This results in annoying volume changes. The AVC solves this problem by equalizing the volume level.

To prevent clipping, the AVC's gain decreases quickly in dynamic boost conditions. To suppress oscillation effects, the gain increases rather slowly for low-level inputs. The decay time is programmable by means of the AVC register (see page 39).

For input signals ranging from –24 dBr to 0 dBr, the AVC maintains an adjustable output level between –18 dBr and –3 dBr. Fig. 2–6 shows the AVC output level versus its input level with an output level of –18 dBr, maximum attentuation 24 dB and maximum gain of 6 dB. For prescale and volume registers set to 0 dB, a level of 0 dBr corresponds to full scale input/output. This is

- SCART input/output 0 dBr = 2.0 V_{rms}
- Loudspeaker and Aux output 0 dBr = 1.4 V_{rms}

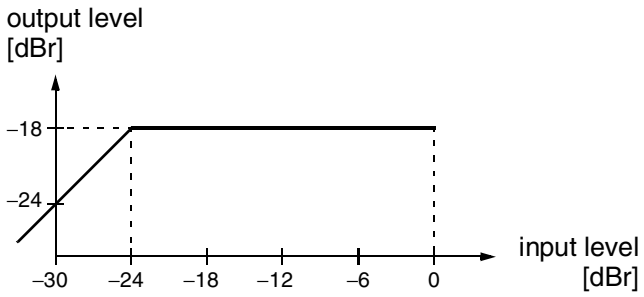

Fig. 2–6: Simplified AVC characteristics

2.5.3. Loudspeaker and Headphone Outputs

The following baseband features are implemented in the loudspeaker and headphone output channels: bass/treble, loudness, balance, and volume. A square wave beeper can be added to the loudspeaker and headphone channel. The loudspeaker channel additionally performs: equalizer (not simultaneously with bass/treble), spatial effects, and a subwoofer crossover filter.

2.5.4. Subwoofer Output

The subwoofer signal is created by combining the left and right channels directly behind the loudness block using the formula (L+R)/2. Due to the division by 2, the D/A converter will not be overloaded, even with full scale input signals. The subwoofer signal is filtered by a third-order low-pass with programmable corner frequency followed by a level adjustment. At the loudspeaker channels, a complementary high-pass filter can be switched on. Subwoofer and loudspeaker output use the same volume (Loudspeaker Volume Register).

2.5.5. Quasi-Peak Detector

The quasi-peak readout register can be used to read out the quasi-peak level of any input source. The feature is based on following filter time constants:

attack time: 1.3 ms
decay time: 37 ms

2.5.6. Micronas BASS (MB)

The **M**icronas **B**ASS system extends the frequency range of loudspeakers or headphones.

After the adaption of MB to the loudspeakers and the cabinet, further customizing of MB allows individual fine tuning of the sound.

The Micronas BASS is placed in the subwoofer path. For applications without a subwoofer, the enhanced bass signal can be added back onto the Left/Right channels (see Fig. 2–1 on page 10). MB combines two effects: dynamic amplification and adding harmonics.

2.5.6.1. Dynamic Amplification

Low frequency signals can be boosted while the output signal amplitude is measured. If the amplitude comes close to a definable limit, the gain is reduced automatically in dynamic Volume mode. Therefore, the system adapts to the signal amplitude which is really present at the output of the MSP device. Clipping effects are avoided.

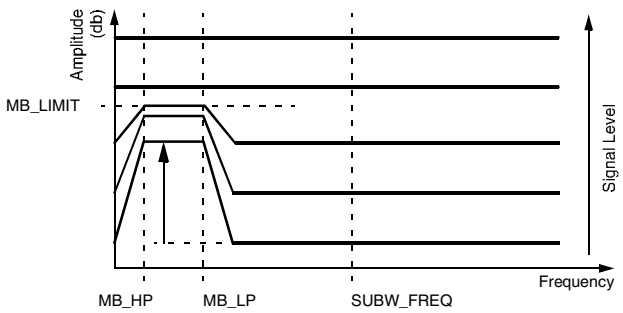

Fig. 2–7: Dynamic amplification

2.5.6.2. Adding Harmonics

Micronas BASS exploits the psychoacoustic phenomenon of the 'missing fundamental'. Adding harmonics of the frequency components below the cutoff frequency gives the impression of actually hearing the low frequency fundamental. In other words: The listener has the impression that a loudspeaker system seems to reproduce frequencies although physically not possible.

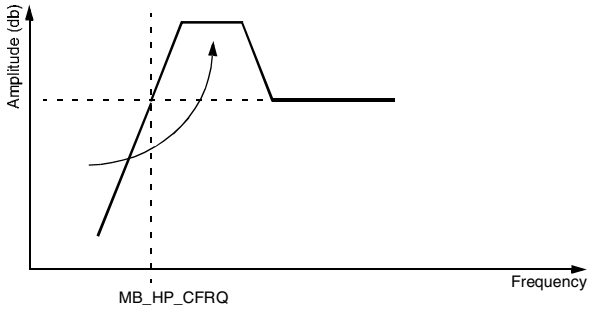

Fig. 2–8: Adding harmonics

2.5.6.3. Micronas BASS Parameters

Several parameters allow tuning the characteristics of Micronas BASS according to the TV loudspeaker, the cabinet, and personal preferences (see Table 3–11 on page 35). For more detailed information on how to set up MB, please refer to the corresponding application note on the Micronas homepage.

2.6. Surround Processing

2.6.1. Output Configuration

Like the MSP 34x1G ICs, the MSP 34x2G can be used for virtual surround sound on the left and right loudspeaker outputs. For multichannel outputs (more than 2 channels), extra output pins have been defined (DACM_C and DACM_S pins). For processing of these output channels, internal resources are shared with the headphone processing. As a result, headphone output is not possible together with multi-channel surround processing. When headphone output pins are active, the surround outputs are muted and vice versa. There are two options: the AUX/CS switch and the channel configuration. The output configuration is controlled by means of register 48_{hex} on I^2C subaddress 12_{hex}.

2.6.1.1. AUX/CS Switch

This switch defines which output pin pair is driven by the D/A converters that are used for headphone or surround processing. The unselected pins are muted. This makes it convenient to connect the center/surround amplifiers or outputs to the MSP 34x2G without external switches.

Mute the Headphone/Surround channel by setting register 06_{hex} to 0000_{hex} before switching. Allow at least 2 s for settling to avoid audible plops.

2.6.1.2. Channel Configuration

The channel configuration defines whether surround processing is switched on and what resources of the IC are to be used for surround sound processing. There are 3 options:

- **STEREO:**
  The IC is in the normal stereo processing mode. No surround processing takes place. In this mode, the IC is compatible to the MSP 34x0G.
- **TWO_CHANNEL:**
  Surround sound processing is switched on, but only left and right loudspeaker channels are used for output. This mode is used for virtual surround sound.
- **MULTI_CHANNEL:**
  Surround sound processing is switched on, left and right loudspeaker channels together with left and right headphone channels are used for output. The following relationship applies: Center corresponds to the left headphone channel; Surround corresponds to the right headphone channel.

2.6.2. Surround Processing Mode

Surround sound processing is controlled by three functions:

The "Decoder Matrix" defines which method should be used to create a multichannel signal (L, C, R, S) out of a stereo input.

The "Surround Reproduction" determines whether the surround signal "S" is fed to surround speakers. If no surround speaker is actually connected, it defines the method that should be used to create surround effects.

The "Center Mode" determines how the center signal "C" is to be processed. It can be left unmodified, distributed to left and right, discarded or high pass filtered, whereby the low pass signals are distributed to left and right.

The surround processing mode is controlled by means of register $4B_{hex}$ on I^2C subaddress 12_{hex}.

2.6.2.1. Decoder Matrix

The Decoder Matrix allows three settings:

- **ADAPTIVE:**
  The adaptive matrix is used for Dolby Surround Pro Logic and Virtual Dolby Surround. Even sound material not encoded in Dolby Surround will produce good surround effects in this mode. The use of the adaptive matrix requires a license from Dolby Laboratories (See License Notice on page 6).
- **PASSIVE:**
  A simple fixed matrix is used for other surround modes (Micronas AROUND).
- **EFFECT:**
  A fixed matrix that is used for mono sound and special effects. In adaptive or passive mode no surround signal is present in case of mono, moreover in adaptive mode even the left and right output channels carry no signal (or just low frequency signals in case of Center Mode = NORMAL). If surround sound is still required for mono signals, the effect mode can be used. This forces the surround channel to be active. The effect mode can be used together with 3D-PANORAMA. The result will be a pseudo stereo effect or a broadened stereo image respectively.

2.6.2.2. Surround Reproduction

Surround sound can be reproduced with four choices:

- **REAR_SPEAKER:**
  If there are any surround speakers connected to the system, this mode should be used. Useful loudspeaker combinations are: (L, C, R, S) or (L, R, S).
- **FRONT_SPEAKER:**
  If there is no surround speaker connected, this mode can be used. Surround information is mixed to left and right output but without creating the illusion of a virtual speaker. It is similar to stereo but an additional center speaker can be used. This mode should be used with the adaptive decoder matrix only. Useful loudspeaker combinations are: (L, C, R) (Note: the surround output channel is muted).
- **PANORAMA:**
  The surround information is mixed to left and right in order to create the illusion of a virtual surround speaker. Useful loudspeaker combinations are: (L, C, R) or (L, R) (Note: the surround output channel is muted).
- **3D-PANORAMA:**
  Like PANORAMA with improved effect. This algorithm has been approved by the Dolby Laboratories for compliance with the "Virtual Dolby Surround" technology. Useful loudspeaker combinations are: (L, C, R) or (L, R) (Note: the surround output channel is muted).

2.6.2.3. Center Modes

Four center modes are supported:

- **NORMAL:**
  small center speaker connected, L and R speakers have better bass capability.
- **WIDE:**
  L,R, and C speakers all have good bass capability.
- **PHANTOM:**
  No center speaker used. Center signal is distributed to L and R (Note: the center output channel C is muted).
- **OFF:**
  No center speaker used. Center signal C is discarded (Note: the center output channel C is muted).

2.6.2.4. Useful Combinations of Surround Processing Modes

In principle, "Decoder Matrix", "Surround Reproduction", and "Center Modes" are independent settings (all "Decoder Matrix" settings can be used with all "Surround Reproduction" and "Center Modes") but there are some combinations that do not create "good" sound. Useful combinations are

Surround Reproduction and Center Modes

- **REAR_SPEAKER:**
  This mode is used if surround speakers are available. Useful center modes are NORMAL, WIDE, PHANTOM, and OFF.
- **FRONT_SPEAKER:**
  This mode can be used if no surround speaker but a center speaker is connected. Useful center modes are NORMAL and WIDE.
- **PANORAMA or 3D-PANORAMA:**
  No surround speaker used. Two (L and R) or three (L, R, and C) loudspeakers can be used. Useful center modes are NORMAL, WIDE, PHANTOM, and OFF.

Center Modes and Decoder Matrix

- **PHANTOM:**
  Should only be used together with ADAPTIVE Decoder Matrix.
- **NORMAL and WIDE:**
  Can be used together with any Surround Decoder Matrix.
- **OFF:**
  In special cases, this mode can be used together with the PASSIVE and EFFECT Decoder Matrix (no center speaker connected).

2.6.3. Examples

Table 2–3 shows some examples of how these modes can be used to configure the IC. The list is not intended to be complete, more modes are possible.

Table 2–3: Examples of Surround Configurations

Configurations	Speaker Configuration[1)]	Output Configuration Register (48_{hex})		Surround Processing Mode Register ($4B_{hex}$)		
		AUX/CS Switch [15]	Channel Configuration [14:8]	Decoder Matrix [15:8]	Surround Reproduction [7:4]	Center Mode [3:0]
Stereo IC is compatible to the MSP34x0G.						
Stereo	(L,R)	AUX	STEREO	–	–	–
Surround Modes as defined by Dolby Laboratories [2)]						
Dolby Pro Logic	(L,C,R,S)	CS	MULTI_CHANNEL	ADAPTIVE	REAR_ SPEAKER	NORMAL WIDE
	(L,R,S)	CS	MULTI_CHANNEL	ADAPTIVE	REAR_ SPEAKER	PHANTOM
Dolby 3 Stereo	(L,C,R)	CS	MULTI_CHANNEL	ADAPTIVE	FRONT_ SPEAKER	NORMAL WIDE
Virtual Dolby Surround	(L,R)	AUX	TWO_CHANNEL	ADAPTIVE	3D_PANORAMA	PHANTOM
Surround Modes that use the Dolby Pro Logic Matrix[2)]						
3-Channel Virtual Surround	(L,C,R)	CS	MULTI_CHANNEL	ADAPTIVE	3D_PANORAMA	NORMAL WIDE
Passive Matrix Surround Sound						
Micronas AROUND Multi-channel (4-channel configuration)	(L,C,R,S)	CS	MULTI_CHANNEL	PASSIVE	REAR_ SPEAKER	NORMAL WIDE
Micronas AROUND Multi-channel (3-channel configuration)	(L,R,S)	CS	MULTI_CHANNEL	PASSIVE	REAR_ SPEAKER	OFF
Micronas AROUND Virtual (2-channel configuration)	(L,R)	AUX	TWO_CHANNEL	PASSIVE	3D_PANORAMA	OFF
Micronas AROUND Virtual (3-channel configuration)	(L,C,R)	CS	MULTI_CHANNEL	PASSIVE	3D_PANORAMA	NORMAL WIDE
Special Effects Surround Sound						
Micronas AROUND for mono (4-channel configuration)	(L,C,R,S)	CS	MULTI_CHANNEL	EFFECT	REAR_ SPEAKER	NORMAL WIDE
Micronas AROUND Virtual for mono (2-channel configuration)	(L,R)	AUX	TWO_CHANNEL	EFFECT	3D_PANORAMA	OFF
Micronas AROUND Virtual for mono (3-channel configuration)	(L,C,R)	CS	MULTI_CHANNEL	EFFECT	3D_PANORAMA	NORMAL WIDE

[1)] Speakers not in use are muted automatically.
[2)] The implementation in products requires a license from Dolby Laboratories Licensing Corporation (see note on page 6).

2.6.4. Application Tips for using 3D-PANORAMA

2.6.4.1. Sweet Spot

Good results are only obtained in a rather close area along the middle axis between the two loudspeakers: the sweet spot. Moving away from this position degrades the effect.

2.6.4.2. Clipping

For the test at Dolby Labs, it is very important to have no clipping effects even with worst case signals. That is, 2 Vrms input signal must not clip. The SCART input prescale register has to be set to values of max 19_{hex} (25_{dec}). This is sufficient in terms of clipping.

However, it was found, that by reducing the prescale to a value lower than 25_{dec} more convincing effects are generated in case of very high dynamic signals. A value of 18_{dec} is a good compromise between overall volume and additional headroom.

Test signals: sine sweep with 2 V_{RMS}; L only, R only, L&R equal phase, L&R anti phase.

Listening tests: Dolby Trailers (train trailer, city trailer, canyon trailer...)

2.6.4.3. Loudspeaker Requirements

The loudspeakers used and their positioning inside the TV set will greatly influence the performance of the virtualizer. The algorithm works with the direct sound path. Reflected sound waves reduce the effect. So it's most important to have as much direct sound as possible, compared to indirect sound.

To obtain the approval for a TV set, Dolby Laboratories require mounting the loudspeakers at the front of the set. Loudspeakers radiating to the side of the TV set will not produce convincing effects. Good directionality of the loudspeakers towards the listener is optimal.

The virtualizer was specially developed for implementation in TV sets. Even for rather small stereo TV's, sufficient sound effects can be obtained. For small sets, the loudspeaker placement should be to the side of the CRT; for large screen sets (or 16:9 sets), mounting the loudspeakers below the CRT is acceptable (large separation is preferred, low frequency speakers should be outmost to avoid cancellation effects). Using external loudspeakers with a large stereo base will not create optimal effects.

The loudspeakers should be able to reproduce a wide frequency range. The most important frequency range starts from 160 Hz and ranges up to 5 kHz.

Great care has to be taken with systems that use one common subwoofer: A single loudspeaker cannot reproduce virtual sound locations. The crossover frequency must be lower than 120 Hz.

2.6.4.4. Cabinet Requirements

During listening tests at Dolby Laboratories, no resonances in the cabinet should occur.

Good material to check for resonances are the Dolby Trailers or other dynamic sound tracks.

2.6.5. Input and Output Levels in Dolby Surround Pro Logic Mode

The analog inputs are able to accept 2 Vrms input level without overloading any stage before the volume control. The nominal input level (input sensitivity) is 350 mV. This gives 15 dB headroom. The scart prescale value should be set to max 0 dB (max 25_{dec}).

I^2S-Inputs should have the same headroom (15 dB) when entering the MSP 34x2G. The highest possible input level of 0 dBFS is accepted without internal overflow. The I^2S-prescale value should be set to 0 dB (16_{dec}).

With higher prescale values lower input sensitivities can be accommodated. A higher input sensitivity is not possible, because at least 15 dB headroom is required for every input according to the Dolby specifications.

A full-scale left only input (2 Vrms) will produce a full-scale left only output (at 0 dB volume). The typical output level is 1.37 Vrms for DACM_L. The same holds true for right only signals (1.37 Vrms for DACM_R). A full-scale input level on both inputs (Lin=Rin=2 Vrms) will give a center only output with maximum level. The typical output level is 1.37 Vrms for DACM_C. A full-scale input level on both inputs (but Lin and Rin with inverted phases) will give a surround-only signal with maximum level (1.37 Vrms for DACM_S).

For reproducing Dolby Pro Logic according to its specifications, the center and surround outputs must be amplified by 3 dB with respect to the L and R output signals. This can be done in two ways:

1. By implementing 3 dB more amplification for center and surround loudspeaker outputs.

2. By always selecting volume for L and R 3 dB lower than center and surround. Method 1 is preferable, as method 2 lowers the achievable SNR for left and right signals by 3 dB.

2.6.6. Subwoofer in Surround Mode

If the channel configuration is set to STEREO or TWO_CHANNEL, the subwoofer signal is created by combining the left and right channels directly behind the loudness block using the formula (L+R)/2.

Note: This is identical to the MSP 34x0G.

If the channel configuration is MULTI_CHANNEL, the subwoofer signal is created by combining the left and right channels of the loudspeaker channel and the center signal (= headphone left) directly behind the loudness block using the formula (L+R+C)/2. Due to the fact, that the subwoofer is formed behind all bass/treble/loudness filters, it is strongly recommended to have exactly the same setting for these filters in both, the loudspeaker and center/surround channels when using the subwoofer output. Any mismatch in these settings will result in an unbalanced mix of L, C and R for the subwoofer signal.

2.6.7. Equalizer in Surround Mode

In the MULTI_CHANNEL Surround mode, the equalizer can be used with one common setting for the left, right, and center channels, but the equalizer cannot be used for the surround channel (see Fig. 2–3 on page 11).

2.7. SCART Signal Routing

2.7.1. SCART DSP In and SCART Out Select

The SCART DSP Input Select and SCART Output Select blocks include full matrix switching facilities. To design a TV set with four pairs of SCART-inputs and two pairs of SCART-outputs, no external switching hardware is required. The switches are controlled by the ACB user register (see page 48).

2.7.2. Stand-by Mode

If the MSP 34x2G is switched off by first pulling STANDBYQ low and then (after >1 µs delay) switching off DVSUP and AVSUP, but keeping AHVSUP (**'Stand-by'-mode**), the SCART switches maintain their position and function. This allows the copying from SCART-input to SCART-output in the TV set's stand-by mode.

In case of power on or starting from stand-by (switching on the DVSUP and AVSUP, RESETQ going high 2 ms later), all internal registers except the ACB register (see page 48) are reset to the default configuration (see Table 3–5 on page 26). The reset position of the ACB register becomes active after the first I^{2}C transmission into the Baseband Processing part. By transmitting the ACB register first, the reset state can be redefined.

2.8. I^{2}S Bus Interface

The MSP 34x2G has a synchronous master/slave input/output interface running on 32 kHz.

The interface accepts two formats:

1. I^{2}S_WS changes at the word boundary
2. I^{2}S_WS changes one I^{2}S-clock period before the word boundaries.

All I^{2}S options are set by means of the MODUS and the I2S_CONFIG registers.

The I^{2}S bus interface consists of five pins:

- I2S_DA_IN1, I2S_DA_IN2:
  I^{2}S serial data input: 16, 18....32 bits per sample
- I2S_DA_OUT:
  I^{2}S serial data output: 16, 18...32 bits per sample
- I2S_CL:
  I^{2}S serial clock
- I2S_WS:
  I^{2}S word strobe signal defines the left and right sample

If the MSP 34x2G serves as the master on the I^{2}S interface, the clock and word strobe lines are driven by the IC. In this mode, only 16 or 32 bits per sample can be selected. In slave mode, these lines are input to the IC and the MSP clock is synchronized to 576 times the I2S_WS rate (32 kHz). NICAM operation is not possible in slave mode.

An I^{2}S timing diagram is shown in Fig. 4–24 on page 81.

2.9. ADR Bus Interface

For the ASTRA Digital Radio System (ADR), the MSP 3402G, MSP 3412G, and MSP 3452G performs preprocessing such as carrier selection and filtering. Via the 3-line ADR-bus, the resulting signals are transferred to the DRP 3510A coprocessor, where the source decoding is performed. To be prepared for an upgrade to ADR with an additional DRP board, the following lines of MSP 34x2G should be provided on a feature connector:

– AUD_CL_OUT

– I2S_DA_IN1 or I2S_DA_IN2

– I2S_DA_OUT

– I2S_WS

– I2S_CL

– ADR_CL, ADR_WS, ADR_DA

For more details, please refer to the DRP 3510A data sheet.

2.10. Digital Control I/O Pins and Status Change Indication

The static level of the digital input/output pins D_CTR_I/O_0/1 is switchable between HIGH and LOW via the I^2C-bus by means of the ACB register (see page 48). This enables the controlling of external hardware switches or other devices via I^2C-bus.

The digital input/output pins can be set to high impedance by means of the MODUS register (see page 32). In this mode, the pins can be used as input. The current state can be read out of the STATUS register (see page 34).

Optionally, the pin D_CTR_I/O_1 can be used as an interrupt request signal to the controller, indicating any changes in the read register STATUS. This makes polling unnecessary, I^2C bus interactions are reduced to a minimum (see STATUS register on page 34 and MODUS register on page 32).

2.11. Clock PLL Oscillator and Crystal Specifications

The MSP 34x2G derives all internal system clocks from the 18.432 MHz oscillator. In NICAM or in I^2S-Slave mode, the clock is phase-locked to the corresponding source. Therefore, it is not possible to use NICAM and I^2S-Slave mode at the same time.

For proper performance, the on-chip clock oscillator requires a 18.432 MHz crystal. Note that for the phase-locked modes (NICAM, I^2S-Slave), crystals with tighter tolerance are required.

3. Control Interface

3.1. Device and Subaddresses

The MSP 34x2G is controlled via the I^2C bus slave interface.

The IC is selected by transmitting one of the MSP 34x2G device addresses. In order to allow up to three MSP ICs to be connected to a single bus, an address select pin (ADR_SEL) has been implemented. With ADR_SEL pulled to high, low, or left open, the MSP 34x2G responds to different device addresses. A device address pair is defined as a write address and a read address (see Table 3–1).

Writing is done by sending the write device address, followed by the subaddress byte, two address bytes, and two data bytes.

Reading is done by sending the write device address, followed by the subaddress byte and two address bytes. Without sending a stop condition, reading of the addressed data is completed by sending the device read address and reading two bytes of data.

Refer to Section 3.1.3. for the I^2C bus protocol and to Section 3.4. “Programming Tips” on page 53 for proposals of MSP 34x2G I^2C telegrams. See Table 3–2 for a list of available subaddresses.

Besides the possibility of hardware reset, the MSP can also be reset by means of the RESET bit in the CONTROL register by the controller via I^2C bus.

Due to the architecture of the MSP 34x2G, the IC cannot react immediately to an I^2C request. The typical response time is about 0.3 ms. If the MSP cannot accept another byte of data (e.g. while servicing an internal interrupt), it holds the clock line I2C_CL low to force the transmitter into a wait state. The I^2C Bus Master must read back the clock line to detect when the MSP is ready to receive the next I^2C transmission. The positions within a transmission where this may happen are indicated by “Wait” in Section 3.1.3. The maximum wait period of the MSP during normal operation mode is less than 1 ms.

3.1.1. Internal Hardware Error Handling

In case of any hardware problems (e.g. interruption of the power supply of the MSP), the MSP’s wait period is extended to 1.8 ms. After this time period elapses, the MSP releases data and clock lines.

Indicating and solving the error status:

To indicate the error status, the remaining acknowledge bits of the actual I^2C-protocol will be left high. Additionally, bit[14] of CONTROL is set to one. The MSP can then be reset via the I^2C bus by transmitting the reset condition to CONTROL.

Indication of reset:

Any reset, even caused by an unstable reset line etc., is indicated in bit[15] of CONTROL.

A general timing diagram of the I^2C bus is shown in Fig. 4–23 on page 79.

Table 3–1: I^2C Bus Device Addresses

ADR_SEL	Low (connected to DVSS)		High (connected to DVSUP)		Left Open	
Mode	**Write**	**Read**	**Write**	**Read**	**Write**	**Read**
MSP device address	80_{hex}	81_{hex}	84_{hex}	85_{hex}	88_{hex}	89_{hex}

Table 3–2: I^2C Bus Subaddresses

Name	Binary Value	Hex Value	Mode	Function
CONTROL	0000 0000	00	Read/Write	Write: Software reset of MSP (see Table 3–3) Read: Hardware error status of MSP
WR_DEM	0001 0000	10	Write	write address demodulator
RD_DEM	0001 0001	11	Write	read address demodulator
WR_DSP	0001 0010	12	Write	write address DSP
RD_DSP	0001 0011	13	Write	read address DSP

3.1.2. Description of CONTROL Register

Table 3–3: CONTROL as a Write Register

Name	Subaddress	Bit[15] (MSB)	Bits[14:0]
CONTROL	00 hex	1 : RESET 0 : normal	0

Table 3–4: CONTROL as a Read Register (only MSP 34x2G-versions from A2 on)

Name	Subaddress	Bit[15] (MSB)	Bit[14]	Bits[13:0]
CONTROL	00 hex	Reset status after last reading of CONTROL: 0 : no reset occured 1 : reset occured	Internal hardware status: 0 : no error occured 1 : internal error occured	not of interest
Reading of CONTROL will reset the bits[15,14] of CONTROL. After Power-on, bit[15] of CONTROL will be set; it must be read once to be resetted.				

3.1.3. Protocol Description

Write to DSP or Demodulator

S	write device address	Wait	ACK	sub-addr	ACK	addr-byte high	ACK	addr-byte low	ACK	data-byte-high	ACK	data-byte low	ACK	P

Read from DSP or Demodulator

S	write device address	Wait	ACK	sub-addr	ACK	addr-byte high	ACK	addr-byte low	ACK	S	read device address	Wait	ACK	data-byte-high	ACK	data-byte low	NAK	P

Write to Control Registers

S	write device address	Wait	ACK	sub-addr	ACK	data-byte high	ACK	data-byte low	ACK	P

Read from Control Register

S	write device address	Wait	ACK	00hex	ACK	S	read device address	Wait	ACK	data-byte-high	ACK	data-byte low	NAK	P

Note: S = I^2C-Bus Start Condition from master
P = I^2C-Bus Stop Condition from master
ACK = Acknowledge-Bit: LOW on I2C_DA from slave (= MSP, light gray) or master (= controller dark gray)
NAK = Not Acknowledge-Bit: HIGH on I2C_DA from master (dark gray) to indicate ‘End of Read’ or from MSP indicating internal error state
Wait = I^2C-Clock line is held low, while the MSP is processing the I^2C command. This waiting time is max. 1 ms

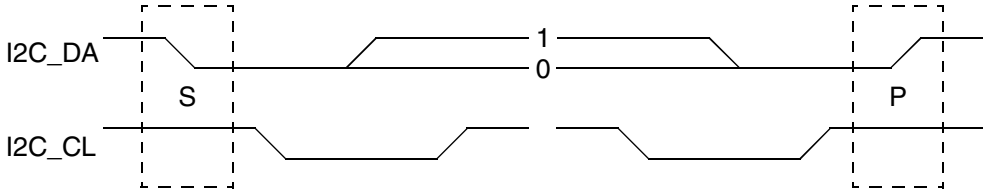

Fig. 3–1: I²C bus protocol (MSB first; data must be stable while clock is high)

3.1.4. Proposals for General MSP 34x2G I²C Telegrams

3.1.4.1. Symbols

`daw`	write device address (80_{hex}, 84_{hex} or 88_{hex})
`dar`	read device address (81_{hex}, 85_{hex} or 89_{hex})
`<`	Start Condition
`>`	Stop Condition
`aa`	Address Byte
`dd`	Data Byte

3.1.4.2. Write Telegrams

`<daw 00 d0 00>`	write to CONTROL register
`<daw 10 aa aa dd dd>`	write data into demodulator
`<daw 12 aa aa dd dd>`	write data into DSP

3.1.4.3. Read Telegrams

`<daw 00 <dar dd dd>`	read data from CONTROL register
`<daw 11 aa aa <dar dd dd>`	read data from demodulator
`<daw 13 aa aa <dar dd dd>`	read data from DSP

3.1.4.4. Examples

`<80 00 80 00>`	RESET MSP statically
`<80 00 00 00>`	Clear RESET
`<80 10 00 30 00 01>`	Automatic Sound Select = ON
`<80 10 00 20 00 03>`	Set demodulator to stand. 03_{hex}
`<80 11 02 00 <81 dd dd>`	Read STATUS
`<80 12 00 08 01 20>`	Set loudspeaker channel source to Stereo or A/B and Matrix to Stereo (transparent mode)

More examples of typical application protocols are listed in Section 3.4. “Programming Tips” on page 53.

3.2. Start-Up Sequence: Power-Up and I²C Controlling

After POWER ON or RESET (see Fig. 4–22), the IC is in an inactive state. All registers are in the Reset position (see Table 3–5 and Table 3–6), the analog outputs are muted. The controller has to initialize all registers for which a non-default setting is necessary.

3.3. MSP 34x2G Programming Interface

3.3.1. User Registers Overview

The MSP 34x2G is controlled by means of user registers. The complete list of all user registers is given in Table 3–5 and Table 3–6. The registers are partitioned into the Demodulator section (Subaddress 10_{hex} for writing, 11_{hex} for reading) and the Baseband Processing sections (Subaddress 12_{hex} for writing, 13_{hex} for reading).

Write and read registers are 16-bit wide, whereby the MSB is denoted bit[15]. Transmissions via I²C bus have to take place in 16-bit words (two byte transfers, with the most significant byte transferred first). All write registers, except the demodulator write registers, are readable.

Unused parts of the 16-bit write registers must be zero. **Addresses not given in this table must not be accessed.**

For reasons of software compatibility to the MSP 34xxD, a Manual/Compatibility Mode is available. More read and write registers together with a detailed description can be found in the “Appendix B: Manual/Compatibility Mode” on page 95.

Table 3–5: List of MSP 34x2G Write Registers

Write Register	Address (hex)	Bits	Description and Adjustable Range	Reset	See Page
I^2C Subaddress = 10_{hex} ; Registers are *not* readable					
STANDARD SELECT	00 20	[15:0]	Initial Programming of complete Demodulator	00 00	30
MODUS	00 30	[15:0]	Demodulator, Automatic and I^2S options	00 00	32
I2S CONFIGURATION	00 40	[15:0]	Configuration of I^2S format	00 00	33
I^2C Subaddress = 12_{hex} ; Registers are *all* readable by using I^2C Subaddress = 13_{hex}					
Volume loudspeaker channel	00 00	[15:8]	[+12 dB ... –114 dB, MUTE]	MUTE	38
Volume / Mode loudspeaker channel		[7:0]	1/8 dB Steps, Reduce Volume / Tone Control / Compromise/ Dynamic	00_{hex}	
Balance loudspeaker channel [L/R]	00 01	[15:8]	[0...100 / 100% and 100 / 0...100%] [–127...0 / 0 dB and 0 / –128...0 dB]	100%/100%	39
Balance mode loudspeaker		[7:0]	[Linear / logarithmic mode]	linear mode	
Bass loudspeaker channel	00 02	[15:8]	[+20 dB ... –12 dB]	0 dB	40
Treble loudspeaker channel	00 03	[15:8]	[+15 dB ... –12 dB]	0 dB	41
Loudness loudspeaker channel	00 04	[15:8]	[0 dB ... +17 dB]	0 dB	42
Loudness filter characteristic		[7:0]	[NORMAL, SUPER_BASS]	NORMAL	
Spatial effect strength loudspeaker ch.	00 05	[15:8]	[–100%...OFF...+100%]	OFF	43
Spatial effect mode/customize		[7:0]	[SBE, SBE+PSE]	SBE+PSE	
Volume headphone channel[1)]	00 06	[15:8]	[+12 dB ... –114 dB, MUTE]	MUTE	38
Volume / Mode headphone channel[1)]		[7:0]	1/8 dB Steps, Reduce Volume / Tone Control / Compromise/ Dynamic	00_{hex}	
Volume SCART1 output channel	00 07	[15:8]	[+12 dB ... –114 dB, MUTE]	MUTE	47
Loudspeaker source select	00 08	[15:8]	[FM/AM, NICAM, SCART, I^2S1, I^2S2]	FM/AM	37
Loudspeaker channel matrix		[7:0]	[SOUNDA, SOUNDB, STEREO, MONO...]	SOUNDA	37
Headphone source select[1)]	00 09	[15:8]	[FM/AM, NICAM, SCART, I^2S1, I^2S2]	FM/AM	37
Headphone channel matrix[1)]		[7:0]	[SOUNDA, SOUNDB, STEREO, MONO...]	SOUNDA	37
SCART1 source select	00 0a	[15:8]	[FM/AM, NICAM, SCART, I^2S1, I^2S2]	FM/AM	37
SCART1 channel matrix		[7:0]	[SOUNDA, SOUNDB, STEREO, MONO...]	SOUNDA	37
I^2S source select	00 0b	[15:8]	[FM/AM, NICAM, SCART, I^2S1, I^2S2]	FM/AM	37
I^2S channel matrix		[7:0]	[SOUNDA, SOUNDB, STEREO, MONO...]	SOUNDA	37
Quasi-peak detector source select	00 0c	[15:8]	[FM/AM, NICAM, SCART, I^2S1, I^2S2]	FM/AM	37
Quasi-peak detector matrix		[7:0]	[SOUNDA, SOUNDB, STEREO, MONO...]	SOUNDA	37
Prescale SCART input	00 0d	[15:8]	[00_{hex} ... $7F_{hex}$]	00_{hex}	36
Prescale FM/AM	00 0e	[15:8]	[00_{hex} ... $7F_{hex}$]	00_{hex}	35
FM matrix		[7:0]	[NO_MAT, GSTERERO, KSTEREO]	NO_MAT	36
Prescale NICAM	00 10	[15:8]	[00_{hex} ... $7F_{hex}$] (MSP 3412G, MSP 3452G only)	00_{hex}	36
Prescale I^2S2	00 12	[15:8]	[00_{hex} ... $7F_{hex}$]	10_{hex}	36
ACB : SCART Switches a. D_CTR_I/O	00 13	[15:0]	Bits [15..0]	00_{hex}	48
Beeper	00 14	[15:0]	[00_{hex} ... $7F_{hex}$]/[00_{hex} ... $7F_{hex}$]	0/0	48

Table 3–5: List of MSP 34x2G Write Registers, continued

Write Register	Address (hex)	Bits	Description and Adjustable Range	Reset	See Page
Prescale I^2S1	00 16	[15:8]	[00_{hex} ... $7F_{hex}$]	10_{hex}	36
Tone control mode	00 20	[15:8]	[Bass/Treble, Equalizer]	Bass/Treble	40
Equalizer loudspeaker ch. band 1	00 21	[15:8]	[+12 dB ... –12 dB]	0 dB	41
Equalizer loudspeaker ch. band 2	00 22	[15:8]	[+12 dB ... –12 dB]	0 dB	41
Equalizer loudspeaker ch. band 3	00 23	[15:8]	[+12 dB ... –12 dB]	0 dB	41
Equalizer loudspeaker ch. band 4	00 24	[15:8]	[+12 dB ... –12 dB]	0 dB	41
Equalizer loudspeaker ch. band 5	00 25	[15:8]	[+12 dB ... –12 dB]	0 dB	41
Acoustical Compensation loudspeaker	00 26	[15:0]	C0_Main	0	44
Acoustical Compensation loudspeaker	00 27	[15:0]	C1_Main	0	44
Acoustical Compensation loudspeaker	00 28	[15:0]	C2_Main	0	44
Automatic Volume Correction	00 29	[15:12]	[off, on]	off	39
		[11:8]	[decay time]	00_{hex}	39
		[7:4]	[output level]	–18 dBFS	39
		[3:2]	[max attenuation]	24 dB	39
		[1:0]	[max gain]	6 dB	39
loudspeaker channel mute and invert	00 2B	[7:0]	[on, invert, mute]	on	45
Subwoofer level adjust	00 2C	[15:8]	[+12 dB ... –30 dB, mute]	0 dB	45
Subwoofer corner frequency	00 2D	[15:8]	[50 Hz ... 400 Hz]	00_{hex}	45
Subwoofer complementary high-pass		[7:0]	[off, on, Micronas BASS to Main]	off	45
Balance headphone channel [L/R][1)]	00 30	[15:8]	[0...100 / 100% and 100 / 0...100%] [–127...0 / 0 dB and 0 / –128...0 dB]	100%/100%	39
Balance mode headphone[1)]		[7:0]	[Linear mode / logarithmic mode]	linear mode	
Bass headphone channel[1)]	00 31	[15:8]	[+20 dB ... –12 dB]	0 dB	40
Treble headphone channel[1)]	00 32	[15:8]	[+15 dB ... –12 dB]	0 dB	41
Loudness headphone channel[1)]	00 33	[15:8]	[0 dB ... +17 dB]	0 dB	42
Loudness filter characteristic[1)]		[7:0]	[NORMAL, SUPER_BASS]	NORMAL	
Acoustical Compensation center	00 34	[15:0]	C0_Center	0	44
Acoustical Compensation center	00 35	[15:0]	C1_Center	0	44
Acoustical Compensation center	00 36	[15:0]	C2_Center	0	44
Volume SCART2 output channel	00 40	[15:8]	[+12 dB ... –114 dB, MUTE]	00_{hex}	47
SCART2 source select	00 41	[15:8]	[FM, NICAM, SCART, I^2S1, I^2S2]	FM	37
SCART2 channel matrix		[7:0]	[SOUNDA, SOUNDB, STEREO, MONO...]	SOUNDA	37
AUX/CS switch	00 48	[15]	[AUX, CS]	0_{hex}	49
Channel configuration		[14:8]	[STEREO, TWO_CHANNEL, MULTI_CHANNEL, MULTI_CHANNEL_CENTER]	00_{hex}	49
Tone control mode center channel		[7:0]	[Bass/Treble, Equalizer]	Bass/Treble	49
Spatial effect for surround processing	00 49	[15:8]	[0% - 100%]	00_{hex}	50
Virtual surround effect strength	00 4A	[15:8]	[0% - 100%]	00_{hex}	50

Table 3–5: List of MSP 34x2G Write Registers, continued

Write Register	Address (hex)	Bits	Description and Adjustable Range	Reset	See Page
Decoder matrix	00 4B	[15:8]	[ADAPTIVE/PASSIVE/EFFECT]	00_{hex}	51
Surround reproduction		[7:4]	[REAR_SPEAKER/FRONT_SPEAKER/PANORAMA/ 3D_PANORAMA]	0_{hex}	51
Center mode		[3:0]	[PHANTOM/NORMAL/WIDE/OFF]	0_{hex}	51
Surround delay	00 4C	[15:0]	[5..31ms]	00_{hex}	51
Noise Generator	00 4D	[15:0]	[NOISEL, NOISEC, NOISER, NOISES]	00_{hex}	51
Micronas BASS Effect Strength	00 68	[15:8]	[0 dB ... 127 dB, off]	off	45
Micronas BASS Amplitude Limit	00 69	[15:8]	[0 dB FS... -32 dB FS]	0 dB FS	46
Micronas BASS Harmonic Content	00 6A	[15:8]	[0% ... 100%]	0%	46
Micronas BASS Low Pass Corner Frequency	00 6B	[15:8]	[50 Hz ... 300 Hz]	0 Hz	46
Micronas BASS High Pass Corner Frequency	00 6C	[15:8]	[20 Hz ... 300 Hz]	0 Hz	46

[1)] In Multi Channel Mode, these registers are used for controlling baseband functions of the center and surround channels. Following relationship applies: Center corresponds to the left headphone channel, Surround corresponds to the right headphone channel.

Table 3–6: List of MSP 34x2G Read Registers

Read Register	Address (hex)	Bits	Description and Adjustable Range	See Page
I^2C Subaddress = 11_{hex} ; Registers are *not* writable				
STANDARD RESULT	00 7E	[15:0]	Result of Automatic Standard Detection	34
STATUS	02 00	[15:0]	Monitoring of internal settings e.g. Stereo, Mono, Mute etc. .	34
I^2C Subaddress = 13_{hex} ; Registers are *not* writable				
Quasi peak readout left	00 19	[15:0]	[00_{hex} ... $7FFF_{hex}$] 16 bit two's complement	52
Quasi peak readout right	00 1A	[15:0]	[00_{hex} ... $7FFF_{hex}$] 16 bit two's complement	52
MSP hardware version code	00 1E	[15:8]	[00_{hex} ... FF_{hex}]	52
MSP major revision code		[7:0]	[00_{hex} ... FF_{hex}]	52
MSP product code	00 1F	[15:8]	[00_{hex} ... FF_{hex}]	52
MSP ROM version code		[7:0]	[00_{hex} ... FF_{hex}]	52

3.3.2. Description of User Registers

Table 3–7: Standard Codes for STANDARD SELECT register

MSP Standard Code (Data in hex)	TV Sound Standard	Sound Carrier Frequencies in MHz	MSP 34x2G Version
Automatic Standard Detection			
00 01	Start Automatic Standard Detection and set to detected standard		all
Standard Selection			
00 02	M-Dual FM-Stereo	4.5/4.724212	3402, -12, -22, -42, -52
00 03	B/G -Dual FM-Stereo[1)]	5.5/5.7421875	3402, -12, -52
00 04	D/K1-Dual FM-Stereo[2)]	6.5/6.2578125	
00 05	D/K2-Dual FM-Stereo[2)]	6.5/6.7421875	
00 06	D/K -FM-Mono with HDEV3[3)], not detectable by Automatic Standard Detection, HDEV3[3)] SAT-Mono (i.e. Eutelsat, see Table 6–18)	6.5	
00 07	D/K3-Dual FM-Stereo	6.5/5.7421875	
00 08	B/G -NICAM-FM[1)]	5.5/5.85	3412, -52
00 09	L -NICAM-AM	6.5/5.85	
00 0A	I -NICAM-FM	6.0/6.552	
00 0B	D/K -NICAM-FM[2)]	6.5/5.85	
00 0C	D/K -NICAM-FM with HDEV2[4)], not detectable by Automatic Standard Detection, for China	6.5/5.85	
00 0D	D/K -NICAM-FM with HDEV3[3)], not detectable by Automatic Standard Detection, for China	6.5/5.85	
00 20	BTSC-Stereo	4.5	3422, -42, -52
00 21	BTSC-Mono + SAP		
00 30	M-EIA-J Japan Stereo	4.5	3422, -42, -52
00 40	FM-Stereo Radio with 75 µs Deemphasis	10.7	3422, -42, -52
00 50	SAT-Mono (see Table 6–18)	6.5	3402, -12, -52
00 51	SAT-Stereo (see Table 6–18)	7.02/7.20	
00 60	SAT ADR (Astra Digital Radio)	6.12	

[1)] In case of Automatic Sound Select, the B/G-codes 3_{hex} and 8_{hex} are equivalent.
[2)] In case of Automatic Sound Select, the D/K-codes 4_{hex}, 5_{hex}, 7_{hex}, and B_{hex} are equivalent.
[3)] HDEV3: Max. FM deviation must not exceed 540 kHz
[4)] HDEV2: Max. FM deviation must not exceed 360 kHz

3.3.2.1. STANDARD SELECT Register

The TV sound standard of the MSP 34x2G demodulator is determined by the STANDARD SELECT register. There are two ways to use the STANDARD SELECT register:

– Setting up the demodulator for a TV sound standard by sending the corresponding standard code with a single I^2C-Bus transmission.

– Starting the Automatic Standard Detection for terrestrial TV standards. This is the most comfortable way to set up the demodulator. Within 0.5 s, the detection and set-up of the actual TV sound standard is performed. The detected standard can be read out of the STANDARD RESULT register by the control processor. This feature is recommended for the primary set-up of a TV set. Outputs should be muted during Automatic Standard Detection.

The Standard Codes are listed in Table 3–7.

Selecting a TV sound standard via the STANDARD SELECT register initializes the demodulator. This includes: AGC-settings and carrier mute, tuning frequencies, FIR-filter settings, demodulation mode (FM, AM, NICAM), deemphasis and identification mode.

TV stereo sound standards that are unavailable for a specific MSP version are processed in analog mono sound of the standard. In that case, stereo or bilingual processing will not be possible.

For a complete setup of the TV sound processing from analog IF input to the source selection, the transmissions as shown in Section 3.5. are necessary.

For reasons of software compatibility to the MSP 34x0D, a Manual/Compatibility mode is available. A detailed description of this mode can be found on page 95.

3.3.2.2. Refresh of STANDARD SELECT Register

A general refresh of the STANDARD SELECT register is not allowed. However, the following method enables watching the MSP 34x2G “alive” status and detection of accidental resets (only versions A2 and later):

– After Power-on, bit[15] of CONTROL will be set; it must be read once to enable the reset-detection feature.

– Reading of the CONTROL register and checking the reset indicator bit[15] .

– If bit[15] is “0”, any refresh of the STANDARD SELECT register **is not allowed.**

– If bit[15] is “1”, indicating a reset, a refresh of the STANDARD SELECT register and all other MSPG registers is required.

3.3.2.3. STANDARD RESULT Register

If Automatic Standard Detection is selected in the STANDARD SELECT register, status and result of the Automatic Standard Detection process can be read out of the STANDARD RESULT register. The possible results are based on the mentioned Standard Code and are listed in Table 3–8.

In cases where no sound standard has been detected (no standard present, too much noise, strong interferers, etc.) the STANDARD RESULT register contains $00\ 00_{hex}$. In that case, the controller has to start further actions (for example, set the standard according to a preference list or by manual input).

As long as the STANDARD RESULT register contains a value greater than $07\ FF_{hex}$, the Automatic Standard Detection is still active. During this period, the MODUS and STANDARD SELECT register must not be written. The STATUS register will be updated when the Automatic Standard Detection has finished.

If a present sound standard is unavailable for a specific MSP version, it detects and switches to the analog mono sound of this standard.

Example:
The MSP 3442G will detect a B/G-NICAM signal as standard 3 and will switch to the analog FM-Mono sound.

Table 3–8: Results of the Automatic Standard Detection

Broadcasted Sound Standard	**STANDARD RESULT Register** Read $007E_{hex}$
Automatic Standard Detection could not find a sound standard	0000_{hex}
B/G-FM	0003_{hex}
B/G-NICAM	0008_{hex}
I	$000A_{hex}$
FM-Radio	0040_{hex}
M-Korea M-Japan M-BTSC	0002_{hex} (if MODUS[14,13]=00)
	0020_{hex} (if MODUS[14,13]=01)
	0030_{hex} (if MODUS[14,13]=10)
L-AM D/K1 D/K2 D/K3	0009_{hex} (if MODUS[12]=0)
	0004_{hex} (if MODUS[12]=1)
L-NICAM D/K-NICAM	0009_{hex} (if MODUS[12]=0)
	$000B_{hex}$ (if MODUS[12]=1)
Automatic Standard Detection still active	$>07FF_{hex}$

3.3.2.4. Write Registers on I²C Subaddress 10_{hex}

Table 3–9: Write Registers on I²C Subaddress 10_{hex}

Register Address	Function	Name
$00\ 20_{hex}$	**STANDARD SELECTION Register** Defines TV Sound or FM-Radio Standard bit[15:0] $00\ 01_{hex}$ start Automatic Standard Detection $00\ 02_{hex}$ Standard Codes (see Table 3–7) ... $00\ 60_{hex}$	STANDARD_SEL
$00\ 30_{hex}$	**MODUS Register** Preference in Automatic Standard Detection: bit[15] 0 undefined, must be 0 bit[14:13] detected 4.5 MHz carrier is interpreted as:[1)] 0 standard M (Korea) 1 standard M (BTSC) 2 standard M (Japan) 3 chroma carrier (M/N standards are ignored) bit[12] detected 6.5 MHz carrier is interpreted as:[1)] 0 standard L (SECAM) 1 standard D/K1, D/K2, D/K3, or D/K NICAM General MSP 34x2G Options bit[11:9] 0 undefined, must be 0 bit[8] 0/1 ANA_IN1+/ANA_IN2+; select analog sound IF input pin bit[7] 0/1 active/tristate state of audio clock output pin AUD_CL_OUT bit[6] I²S word strobe alignment 0 WS changes at data word boundary 1 WS changes one clock cycle in advance bit[5] 0/1 master/slave mode of I²S interface (must be set to 0 (= Master) in case of NICAM mode) bit[4] 0/1 active/tristate state of I²S output pins bit[3] state of digital output pins D_CTR_I/O_0 and _1 0 active: D_CTR_I/O_0 and _1 are output pins (can be set by means of the ACB register. see also: MODUS[1]) 1 tristate: D_CTR_I/O_0 and _1 are input pins (level can be read out of STATUS[4,3]) bit[2] 0 undefined, must be 0 bit[1] 0/1 disable/enable STATUS change indication by means of the digital I/O pin D_CTR_I/O_1 Necessary condition: MODUS[3] = 0 (active) bit[0] 0/1 off/on: Automatic Sound Select	MODUS

[1)] Valid at the next start of Automatic Standard Detection.

Table 3–9: Write Registers on I^2C Subaddress 10_{hex}, continued

Register Address	Function	Name
00 40_{hex}	**I2S CONFIGURATION Register** bit[15:1] 0 not used, must be set to “0” bit[0] I2S_CL frequency and I^2S data sample length for master mode 0 2 x 16 bit (1.024 MHz) 1 2 x 32 bit (2.048 MHz))	I2S_CONFIG

3.3.2.5. Read Registers on I²C Subaddress 11_{hex}

Table 3–10: Read Registers on I²C Subaddress 11_{hex}

Register Address	Function	Name
00 $7E_{hex}$	**STANDARD RESULT Register** Readback of the detected TV Sound or FM-Radio Standard bit[15:0] 00 00_{hex} Automatic Standard Detection could not find a sound standard 00 02_{hex} MSP Standard Codes (see Table 3–8) ... 00 40_{hex} >07 FF_{hex} Automatic Standard Detection still active	STANDARD_RES
02 00_{hex}	**STATUS Register** Contains all user relevant internal information about the status of the MSP bit[15:10] undefined bit[8] 0/1 "1" indicates bilingual sound mode or SAP present (internally evaluated from received analog or digital identification signal) bit[7] 0/1 "1" indicates independent mono sound (only for NICAM) bit[6] 0/1 mono/stereo indication (internally evaluated from received analog or digital identification signals) bit[5,9] 00 analog sound standard (FM or AM) active 01 this pattern will not occur 10 digital sound (NICAM) available 11 bad reception condition of digital sound (NICAM) due to: a. high error rate b. unimplemented sound code c. data transmission only bit[4] 0/1 low/high level of digital I/O pin D_CTR_I/O_1 bit[3] 0/1 low/high level of digital I/O pin D_CTR_I/O_0 bit[2] 0 detected secondary carrier (2nd A2 or SAP carrier) 1 no secondary carrier detected bit[1] 0 detected primary carrier (Mono or MPX carrier) 1 no primary carrier detected bit[0] undefined If STATUS change indication is activated by means of MODUS[1]: Each change in the STATUS register sets the digital I/O pin D_CTR_I/O_1 to high level. Reading the STATUS register resets D_CTR_I/O_1.	STATUS

3.3.2.6. Write Registers on I^2C Subaddress 12_{hex}

Table 3–11: Write Registers on I^2C Subaddress 12_{hex}

Register Address	Function	Name
PREPROCESSING		
00 $0E_{hex}$	**FM/AM Prescale** bit[15:8] 00_{hex} ... $7F_{hex}$ Defines the input prescale gain for the demodulated FM or AM signal 00_{hex} off (RESET condition) For all FM modes except satellite FM and AM-mode, the combinations of prescale value and FM deviation listed below lead to internal full scale with 1 kHz test signal and 50 µs emphasis. FM mode bit[15:8] $7F_{hex}$ 28 kHz FM deviation 48_{hex} 50 kHz FM deviation 30_{hex} 75 kHz FM deviation 24_{hex} 100 kHz FM deviation 18_{hex} 150 kHz FM deviation 13_{hex} 180 kHz FM deviation (limit) FM high deviation mode (HDEV2, MSP Standard Code = C_{hex}) bit[15:8] 30_{hex} 150 kHz FM deviation 14_{hex} 360 kHz FM deviation (limit) FM very high deviation mode (HDEV3, MSP Standard Code = 6 and D_{hex}) bit[15:8] 20_{hex} 450 kHz FM deviation $1A_{hex}$ 540 kHz FM deviation (limit) Satellite FM with adaptive deemphasis bit[15:8] 10_{hex} recommendation AM mode (MSP Standard Code = 9) bit[15:8] $7C_{hex}$ recommendation for SIF input levels from 0.1 V_{pp} to 0.8 V_{pp} (Due to the AGC being switched on, the AM-output level remains stable and independent of the actual SIF-level in the mentioned input range)	PRE_FM

Table 3–11: Write Registers on I^2C Subaddress 12_{hex}, continued

Register Address	Function	Name
(continued) 00 $0E_{hex}$	**FM Matrix Modes** Defines the dematrix function for the demodulated FM signal bit[7:0] 00_{hex} no matrix (used for bilingual and unmatrixed stereo sound) 01_{hex} German stereo (Standard B/G) 02_{hex} Korean stereo (also used for BTSC, EIA-J and FM Radio) 03_{hex} sound A mono (left and right channel contain the mono sound of the FM/AM mono carrier) 04_{hex} sound B mono In case of **Automatic Sound Select = on**, the FM Matrix Mode is set automatically. Writing to the FM/AM prescale register (00 $0E_{hex}$ high part) is still allowed. In order not to disturb the automatic process, the low part of any I^2C transmission to this register is ignored. Therefore, any FM-Matrix readback values may differ from data written previously. In case of **Automatic Sound Select = off**, the FM Matrix Mode must be set as shown in Table 6–17 of Appendix B. To enable a **Forced Mono Mode** set A2 THRESHOLD as described in Section 6.3.2.on page 99	FM_MATRIX
00 10_{hex}	**NICAM Prescale** Defines the input prescale value for the digital NICAM signal bit[15:8] 00_{hex} ... $7F_{hex}$ prescale gain examples: 00_{hex} off 20_{hex} 0 dB gain $5A_{hex}$ 9 dB gain (recommendation) $7F_{hex}$ +12 dB gain (maximum gain)	PRE_NICAM
00 16_{hex} 00 12_{hex}	**I2S1 Prescale** **I2S2 Prescale** Defines the input prescale value for digital I^2S input signals bit[15:8] 00_{hex} ... $7F_{hex}$ prescale gain examples: 00_{hex} off 10_{hex} 0 dB gain (recommendation) $7F_{hex}$ +18 dB gain (maximum gain)	PRE_I2S1 PRE_I2S2
00 $0D_{hex}$	**SCART Input Prescale** Defines the input prescale value for the analog SCART input signal bit[15:8] 00_{hex} ... $7F_{hex}$ prescale gain examples: 00_{hex} off 19_{hex} 0 dB gain (2 V_{RMS} input leads to digital full scale) Due to the Dolby requirements, this is the **maximum value** allowed to prohibit clipping of a 2 V_{RMS} input signal. $7F_{hex}$ +14 dB gain (400 mV_{RMS} input leads to digital full scale)	PRE_SCART

Table 3–11: Write Registers on I^2C Subaddress 12_{hex}, continued

Register Address	Function	Name
SOURCE SELECT AND OUTPUT CHANNEL MATRIX		
00 08_{hex} 00 09_{hex} 00 $0A_{hex}$ 00 41_{hex} 00 $0B_{hex}$ 00 $0C_{hex}$	**Source for:** **Loudspeaker Output** **Headphone Output** **SCART1 DA Output** **SCART2 DA Output** **I^2S Output** **Quasi-Peak Detector** bit[15:8] 00_{hex} "FM/AM": demodulated FM or AM mono signal 01_{hex} "Stereo or A/B": demodulator Stereo or A/B signal (in manual mode, this source is identical to the NICAM source in the MSP 3410D) 03_{hex} "Stereo or A": demodulator Stereo Sound or Language A (only defined for Automatic Sound Select) 04_{hex} "Stereo or B": demodulator Stereo Sound or Language B (only defined for Automatic Sound Select) 02_{hex} SCART input 05_{hex} I^2S1 input 06_{hex} I^2S2 input $0C_{hex}$ Main channel: AVC processed signal $0D_{hex}$ Main channel: baseband processed signal with volume $0E_{hex}$ Aux channel: baseband processed signal with volume For demodulator sources, see Table 2–2.	SRC_MAIN SRC_AUX SRC_SCART1 SRC_SCART2 SRC_I2S SRC_QPEAK
00 08_{hex} 00 09_{hex} 00 $0A_{hex}$ 00 41_{hex} 00 $0B_{hex}$ 00 $0C_{hex}$	**Matrix Mode for:** **Loudspeaker Output** **Headphone Output** **SCART1 DA Output** **SCART2 DA Output** **I^2S Output** **Quasi-Peak Detector** bit[7:0] 00_{hex} Sound A Mono (or Left Mono) 10_{hex} Sound B Mono (or Right Mono) 20_{hex} Stereo (transparent mode) 30_{hex} Mono (sum of left and right inputs divided by 2) special modes are available (see Section 6.5.1. on page 107) In Automatic Sound Select mode, the demodulator source channels are set according to Table 2–2. Therefore, the matrix modes of the corresponding output channels should be set to "Stereo" (transparent).	MAT_MAIN MAT_AUX MAT_SCART1 MAT_SCART2 MAT_I2S MAT_QPEAK

Table 3–11: Write Registers on I²C Subaddress 12_{hex}, continued

Register Address	Function	Name
LOUDSPEAKER AND HEADPHONE PROCESSING		
$00\ 00_{hex}$ $00\ 06_{hex}$	**Volume Loudspeaker** **Volume Headphone** bit[15:8] volume table with 1 dB step size $7F_{hex}$ +12 dB (maximum volume) $7E_{hex}$ +11 dB ... 74_{hex} +1 dB 73_{hex} 0 dB 72_{hex} –1 dB ... 02_{hex} –113 dB 01_{hex} –114 dB 00_{hex} Mute (reset condition) FF_{hex} Fast Mute (needs about 75 ms until the signal is completely ramped down) bit[7:5] higher resolution volume table 0 +0 dB 1 +0.125 dB increase in addition to the volume table ... 7 +0.875 dB increase in addition to the volume table bit[4] 0 must be set to 0 bit[3:0] clipping mode 0 reduce volume 1 reduce tone control 2 compromise 3 dynamic With large scale input signals, positive volume settings may lead to signal clipping. The MSP 34x2G loudspeaker and headphone volume function is divided into a digital and an analog section. With Fast Mute, volume is reduced to mute position by digital volume only. Analog volume is not changed. This reduces any audible DC plops. To turn volume on again, the volume step that has been used before Fast Mute was activated must be transmitted. If the clipping mode is set to “**reduce volume**”, the following rule is used: To prevent severe clipping effects with bass, treble, or equalizer boosts, the internal volume is automatically limited to a level where, in combination with either bass, treble, or equalizer setting, the amplification does not exceed 12 dB. If the clipping mode is “**reduce tone control**”, the bass or treble value is reduced if amplification exceeds 12 dB. If the equalizer is switched on, the gain of those bands is reduced, where amplification together with volume exceeds 12 dB. If the clipping mode is “**compromise mode**”**,** the bass or treble value and volume are reduced half and half if amplification exceeds 12 dB. If the equalizer is switched on, the gain of those bands is reduced half and half, where amplification together with volume exceeds 12 dB. If the clipping mode is “**dynamic**”, volume is reduced automatically if the signal amplitudes would exceed –2 dBFS within the IC. **For operation of Micronas BASS, dynamic mode must be switched on**.	VOL_MAIN VOL_AUX

Table 3–11: Write Registers on I²C Subaddress 12_{hex}, continued

Register Address	Function	Name
$00\ 29_{hex}$	**Automatic Volume Correction (AVC) Loudspeaker Channel**	
	bit[15:12] 00_{hex} AVC off (and reset internal variables) 08_{hex} AVC on	AVC
	bit[11:8] decay time 08_{hex} 8 s decay time 04_{hex} 4 s decay time 02_{hex} 2 s decay time 01_{hex} 20 ms decay time (should be used for approx. 100 ms after channel change)	AVC_DECAY
	bit[7:4] output level 0_{hex} –18 dBFS 1_{hex} –17 dBFS ... f_{hex} –3 dBFS	AVC_LEVEL
	bit[3:2] maximum attenuation 0_{hex} 24 dB 1_{hex} 18 dB 2_{hex} 12 dB	AVC_MIN
	bit[1:0] maximum gain 0_{hex} 6 dB 1_{hex} 12 dB 3_{hex} 0 dB	AVC_MAX
$00\ 01_{hex}$ $00\ 30_{hex}$	**Balance Loudspeaker Channel** **Balance Headphone Channel**	BAL_MAIN BAL_AUX
	bit[15:8] Linear Mode $7F_{hex}$ Left muted, Right 100% $7E_{hex}$ Left 0.8%, Right 100% ... 01_{hex} Left 99.2%, Right 100% 00_{hex} Left 100%, Right 100% FF_{hex} Left 100%, Right 99.2% ... 82_{hex} Left 100%, Right 0.8% 81_{hex} Left 100%, Right muted	
	bit[15:8] Logarithmic Mode $7F_{hex}$ Left –127 dB, Right 0 dB $7E_{hex}$ Left –126 dB, Right 0 dB ... 01_{hex} Left –1 dB, Right 0 dB 00_{hex} Left 0 dB, Right 0 dB FF_{hex} Left 0 dB, Right –1 dB ... 81_{hex} Left 0 dB, Right –127 dB 80_{hex} Left 0 dB, Right –128 dB	
	bit[7:0] Balance Mode 00_{hex} linear 01_{hex} logarithmic	
	Positive balance settings reduce the left channel without affecting the right channel; negative settings reduce the right channel leaving the left channel unaffected.	

Table 3–11: Write Registers on I²C Subaddress 12_{hex}, continued

Register Address	Function	Name
00 20_{hex}	**Tone Control Mode Loudspeaker Channel** bit[15:8] 00_{hex} bass and treble is active FF_{hex} equalizer is active Defines whether Bass/Treble or Equalizer is activated for the loudspeaker channel. Bass and Equalizer cannot work simultaneously. If Equalizer is used, Bass, and Treble coefficients must be set to zero and vice versa.	TONE_MODE
00 02_{hex} 00 31_{hex}	**Bass Loudspeaker Channel** **Bass Headphone Channel** bit[15:8] extended range $7F_{hex}$ +20 dB 78_{hex} +18 dB 70_{hex} +16 dB 68_{hex} +14 dB normal range 60_{hex} +12 dB 58_{hex} +11 dB ... 08_{hex} +1 dB 00_{hex} 0 dB $F8_{hex}$ –1 dB ... $A8_{hex}$ –11 dB $A0_{hex}$ –12 dB Higher resolution is possible: an LSB step in the normal range results in a gain step of about 1/8 dB, in the extended range about 1/4 dB. With positive bass settings, internal clipping may occur even with overall volume less than 0 dB. This will lead to a clipped output signal. Therefore, it is not recommended to set bass to a value that, in conjunction with volume, would result in an overall positive gain.	BASS_MAIN BASS_AUX

Table 3–11: Write Registers on I²C Subaddress 12_{hex}, continued

Register Address	Function	Name
$00\ 03_{hex}$ $00\ 32_{hex}$	**Treble Loudspeaker Channel** **Treble Headphone Channel** bit[15:8] 78_{hex} +15 dB 70_{hex} +14 dB ... 08_{hex} +1 dB 00_{hex} 0 dB $F8_{hex}$ –1 dB ... $A8_{hex}$ –11 dB $A0_{hex}$ –12 dB Higher resolution is possible: an LSB step results in a gain step of about 1/8 dB. With positive treble settings, internal clipping may occur even with overall volume less than 0 dB. This will lead to a clipped output signal. Therefore, it is not recommended to set treble to a value that, in conjunction with volume, would result in an overall positive gain.	TREB_MAIN TREB_AUX
$00\ 21_{hex}$ $00\ 22_{hex}$ $00\ 23_{hex}$ $00\ 24_{hex}$ $00\ 25_{hex}$	**Equalizer Loudspeaker Channel Band 1 (below 120 Hz)** **Equalizer Loudspeaker Channel Band 2 (center: 500 Hz)** **Equalizer Loudspeaker Channel Band 3 (center: 1.5 kHz)** **Equalizer Loudspeaker Channel Band 4 (center: 5 kHz)** **Equalizer Loudspeaker Channel Band 5 (above: 10 kHz)** bit[15:8] 60_{hex} +12 dB 58_{hex} +11 dB ... 08_{hex} +1 dB 00_{hex} 0 dB $F8_{hex}$ –1 dB ... $A8_{hex}$ –11 dB $A0_{hex}$ –12 dB Higher resolution is possible: an LSB step results in a gain step of about 1/8 dB. With positive equalizer settings, internal clipping may occur even with overall volume less than 0 dB. This will lead to a clipped output signal. Therefore, it is not recommended to set equalizer bands to a value that, in conjunction with volume, would result in an overall positive gain.	EQUAL_BAND1 EQUAL_BAND2 EQUAL_BAND3 EQUAL_BAND4 EQUAL_BAND5

Table 3–11: Write Registers on I²C Subaddress 12_{hex}, continued

Register Address	Function	Name
00 04_{hex} 00 33_{hex}	**Loudness Loudspeaker Channel** **Loudness Headphone Channel** bit[15:8] Loudness Gain 44_{hex} +17 dB 40_{hex} +16 dB ... 04_{hex} +1 dB 03_{hex} +0.75 dB 02_{hex} +0.5 dB 01_{hex} +0.25 dB 00_{hex} 0 dB bit[7:0] Loudness Mode 00_{hex} normal (constant volume at 1 kHz) 04_{hex} Super Bass (constant volume at 2 kHz) Higher resolution of Loudness Gain is possible: An LSB step results in a gain step of about 1/4 dB. Loudness increases the volume of low- and high-frequency signals, while keeping the amplitude of the 1-kHz reference frequency constant. The intended loudness has to be set according to the actual volume setting. Because loudness introduces gain, it is not recommended to set loudness to a value that, in conjunction with volume, would result in an overall positive gain. The corner frequency for bass amplification can be set to two different values. In Super Bass mode, the corner frequency is shifted up. The point of constant volume is shifted from 1 kHz to 2 kHz.	LOUD_MAIN LOUD_AUX

Table 3–11: Write Registers on I²C Subaddress 12_{hex}, continued

Register Address	Function	Name
00 05_{hex}	**Spatial Effects Loudspeaker Channel** bit[15:8] Effect Strength $7F_{hex}$ Enlargement 100% $3F_{hex}$ Enlargement 50% ... 01_{hex} Enlargement 0.78% 00_{hex} Effect off FF_{hex} reduction 0.78% ... $C0_{hex}$ reduction 50% 80_{hex} reduction 100% bit[7:4] Spatial Effect Mode 0_{hex} Stereo Basewidth Enlargement (SBE) and Pseudo Stereo Effect (PSE). (Mode A) 2_{hex} Stereo Basewidth Enlargement (SBE) only. (Mode B) bit[3:0] Spatial Effect High-Pass Gain 0_{hex} max. high-pass gain 2_{hex} 2/3 high-pass gain 4_{hex} 1/3 high-pass gain 6_{hex} min. high-pass gain 8_{hex} automatic Spatial effects **should not be used** together with 3D-PANORAMA or PANORAMA. There are several spatial effect modes available: In mode A (low byte = 00_{hex}), the spatial effect depends on the source mode. If the incoming signal is mono, Pseudo Stereo Effect is active; for stereo signals, Pseudo Stereo Effect and Stereo Basewidth Enlargement is effective. The strength of the effect is controllable by the upper byte. A negative value reduces the stereo image. A strong spatial effect is recommended for small TV sets where loudspeaker spacing is rather close. For large screen TV sets, a more moderate spatial effect is recommended. In mode B, only Stereo Basewidth Enlargement is effective. For mono input signals, the Pseudo Stereo Effect has to be switched on. It is worth mentioning, that all spatial effects affect amplitude and phase response. With the lower 4 bits, the frequency response can be customized. A value of 0_{hex} yields a flat response for center signals (L = R), but a high-pass function for L or R only signals. A value of 6_{hex} has a flat response for L or R only signals, but a low-pass function for center signals. By using 8_{hex}, the frequency response is automatically adapted to the sound material by choosing an optimal high-pass gain.	SPAT_MAIN
00 $2B_{hex}$	**Mute or Invert Loudspeaker D/A Output** bit[15:2] must be zero bit[1:0] 0_{hex} no modification 1_{hex} invert left channel of D/A output 2_{hex} mute D/A ouput	MUT_INV_M

Table 3–11: Write Registers on I²C Subaddress 12_{hex}, continued

Register Address	Function	Name
	Acoustical Compensation Filter Loudspeaker Channel:	
$00\ 26_{hex}$	**C0_Main**	ACF_M0
$00\ 27_{hex}$	**C1_Main**	ACF_M1
$00\ 28_{hex}$	**C2_Main**	ACF_M2
	Acoustical Compensation Filter Headphone Left Channel (Center):	
$00\ 34_{hex}$	**C0_Center**	ACF_C0
$00\ 35_{hex}$	**C1_Center**	ACF_C1
$00\ 36_{hex}$	**C2_Center**	ACF_C2
	These cells determine the coefficients of a second order filter for acoustical compensation of loudspeaker responses. The transfer function of this filter is $$H(z) = \frac{(1 + a0 + 2 \times a1 \times z^{-1} + a2 \times z^{-2})}{(1 + 2 \times b1 \times z^{-1} + b2 \times z^{-2})}$$ The transfer function must not have more than 0 dB gain. Micronas will supply a design tool for these coefficients. This feature is switched off by setting all coefficients to zero (reset state). A mute or fastmute operation should precede any change of these coefficients. The coefficients are two's complement numbers. **C0:** bit[15:6] 10-bit coefficient a0 bit[5:3] 3 LSBs for coefficient b1 (together with 6 bit of c1, this forms a 9-bit coefficient for b1) bit[2:0] 3 LSBs for coefficient b2 (together with 6 bit of c2, this forms a 9-bit coefficient for b2) **C1:** bit[15:6] 10-bit coefficient a1 bit[5:0] 6 MSBs for coefficient b1 **C2:** bit[15:6] 10-bit coefficient a2 bit[5:0] 6 MSBs for coefficient b2	

Table 3–11: Write Registers on I^2C Subaddress 12_{hex}, continued

Register Address	Function	Name
SUBWOOFER OUTPUT CHANNEL		
00 $2C_{hex}$	**Subwoofer Level Adjustment** bit[15:8] $0C_{hex}$ +12 dB ... 01_{hex} +1 dB 00_{hex} 0 dB (default) FF_{hex} –1 dB ... $E3_{hex}$ –29 dB $E2_{hex}$ –30 dB ... 80_{hex} Mute bit[7:0] 00_{hex} must be zero If Micronas BASS is added onto the main channel, this register should be set to 00_{hex}	SUBW_LEVEL
00 $2D_{hex}$	**Subwoofer Corner Frequency** bit[15:8] $5...40_{dec}$ corner frequency in 10 Hz steps (range: 50...400 Hz) If Micronas BASS is active, SUBW_FREQ must be set to a value higher than the MB Lowpass Frequency (MB_LP). Choosing the corner frequency of the subwoofer closer to MB_LP results in a narrower MB frequency range. Recommended value: 1.5×MB_LP **Subwoofer Complementary High-Pass Filter** bit[7:0] 0_{hex} loudspeaker channel unfiltered 1_{hex} a complementary high-pass is processed in the loudspeaker output channel **2_{hex} MB added onto main channel**	SUBW_FREQ SUBW_HP
MICRONAS BASS (MB) CONTROL REGISTERS		
00 68_{hex}	**Micronas BASS Effect Strength** bit[15:8] 00_{hex} Micronas BASS OFF (default) $7F_{hex}$ maximum Micronas BASS bit[7:0] 00_{hex} must be zero The Micronas BASS effect strength can be adjusted in 1dB steps. A value of 44_{hex} will yield a medium Micronas BASS effect.	MB_STR

Table 3–11: Write Registers on I^2C Subaddress 12_{hex}, continued

Register Address	Function	Name
$00\ 69_{hex}$	**Micronas BASS Amplitude Limit** bit[15:8] 00_{hex} 0 dBFS (default limitation) FF_{hex} –1 dBFS ... $E0_{hex}$ –32 dBFS bit[7:0] 00_{hex} must be zero The Micronas BASS Amplitude Limit defines the maximum allowed amplitude at the output of the MB relative to 0 dbFS. If the amplitude exceeds MB_LIM, the gain of the MB is automatically reduced. Note that the Volume Clipping Mode must be set to “dynamic” (see page 38).	MB_LIM
$00\ 6A_{hex}$	**Micronas BASS Harmonic Content** bit[15:8] 00_{hex} no harmonics are added (default) $3F_{hex}$ 50% fundamentals + 50% harmonics $7F_{hex}$ 100% harmonics bit[7:0] 00_{hex} must be zero Micronas BASS creates harmonics of the frequencies below the MB highpass frequency (MB_HP). The variable MB_HMC describes the ratio of the harmonics towards the original signal.	MB_HMC
$00\ 6B_{hex}$	**Micronas BASS Low Pass Corner Frequency** bit[15:8] 5_{dec} 50 Hz 6_{dec} 60 Hz ... 30_{dec} 300 Hz bit[7:0] 00_{hex} must be zero The MB lowpass corner frequency (range 50...300 Hz) defines the upper corner frequency of the MB bandpass filter. Recommended values are the same as for the MB highpass corner frequency (MB_HP).	MB_LP
$00\ 6C_{hex}$	**Micronas BASS High Pass Corner Frequency** bit[15:8] 3_{dec} 30 Hz 4_{dec} 40 Hz ... 30_{dec} 300 Hz bit[7:0] 00_{hex} must be zero The Micronas BASS highpass corner frequency defines the lower corner frequency of the MB bandpass filter. The highpass filter avoids loading the loudspeakers with low frequency components that are below the speakers’ cut off frequency. Recommended values for subwoofer systems are around 5_{dec} (=50 Hz), for regular TV sets around 10_{dec} (=100 Hz).	MB_HP

Table 3–11: Write Registers on I^2C Subaddress 12_{hex}, continued

Register Address	Function	Name
SCART OUTPUT CHANNEL		
00 07_{hex} 00 40_{hex}	**Volume SCART1 Output Channel** **Volume SCART2 Output Channel** bit[15:8] volume table with 1 dB step size $7F_{hex}$ +12 dB (maximum volume) $7E_{hex}$ +11 dB ... 74_{hex} +1 dB 73_{hex} 0 dB 72_{hex} –1 dB ... 02_{hex} –113 dB 01_{hex} –114 dB 00_{hex} Mute (reset condition) bit[7:5] higher resolution volume table 0 +0 dB 1 +0.125 dB increase in addition to the volume table ... 7 +0.875 dB increase in addition to the volume table bit[4:0] 01_{hex} this must be 01_{hex}	VOL_SCART1 VOL_SCART2

Table 3–11: Write Registers on I²C Subaddress 12_{hex}, continued

Register Address	Function	Name
SCART SWITCHES AND DIGITAL I/O PINS		
00 13_{hex}	**ACB Register** Defines the level of the digital output pins and the position of the SCART switches bit[15] 0/1 low/high of digital output pin D_CTR_I/O_1 (MODUS[3]=0) bit[14] 0/1 low/high of digital output pin D_CTR_I/O_0 (MODUS[3]=0) bit[13:5] SCART DSP Input Select xxxx00xx0 SCART1 to DSP input (RESET position) xxxx01xx0 MONO to DSP input (Set Sound A Mono in the channel matrix mode for the corresponding output channels) xxxx10xx0 SCART2 to DSP input xxxx11xx0 SCART3 to DSP input xxxx00xx1 SCART4 to DSP input xxxx11xx1 mute DSP input bit[13:5] SCART1 Output Select xx00xxx0x SCART3 input to SCART1 output (RESET position) xx01xxx0x SCART2 input to SCART1 output xx10xxx0x MONO input to SCART1 output xx11xxx0x SCART1 DA to SCART1 output xx00xxx1x SCART2 DA to SCART1 output xx01xxx1x SCART1 input to SCART1 output xx10xxx1x SCART4 input to SCART1 output xx11xxx1x mute SCART1 output bit[13:5] SCART2 Output Select 00xxxx0xx SCART1 DA to SCART2 output (RESET position) 01xxxx0xx SCART1 input to SCART2 output 10xxxx0xx MONO input to SCART2 output 00xxxx1xx SCART2 DA to SCART2 output 01xxxx1xx SCART2 input to SCART2 output 10xxxx1xx SCART3 input to SCART2 output 11xxxx1xx SCART4 input to SCART2 output 11xxxx0xx mute SCART2 output bit[4:0] must be zero The RESET position becomes active at the time of the first write transmission on the control bus to the audio processing part. By writing to the ACB register first, the RESET state can be redefined.	ACB_REG
BEEPER		
00 14_{hex}	**Beeper Volume and Frequency** bit[15:8] Beeper Volume 00_{hex} off $7F_{hex}$ maximum volume bit[7:0] Beeper Frequency 01_{hex} 16 Hz (lowest) 40_{hex} 1 kHz FF_{hex} 4 kHz	BEEPER

Table 3–11: Write Registers on I^2C Subaddress 12_{hex}, continued

Register Address	Function	Name
SURROUND PROCESSING		
00 48_{hex}	**Output Configuration**	MA_CONF
	bit[15] AUX/CS Switch 0 Headphone outputs are active (pin names: DACA_L, DACA_R), CS outputs are muted 1 CS (Center/Surround) outputs are active (pin names: DACM_C, DACM_S), Aux outputs are muted (C corresponds to Aux L, S to Aux R) The AUX/CS switch defines which output pin pair is driven by the D/A converters that are used for headphone or surround processing. The unselected pins are muted. This makes it convenient to connect the center/surround amplifiers or outputs to the MSP 34x2G without external switches. The Headphone/Surround channel should be muted before switching (set register 06_{hex} to: 0000_{hex}). **Allow at least 2 s for settling.**	AUX_CS
	bit[14:8] Channel Configuration 00_{hex} STEREO: This mode is used in plain stereo mode. Standard processing applies to the loudspeaker and headphone channels. Surround processing is switched off. In this mode, the IC is compatible to the MSP 34x0G (if bit[15] is equal to 0). 01_{hex} TWO_CHANNEL: This mode is used for virtual surround sound. The surround processing block is active and its left and right outputs are distributed to the loudspeaker output channel. The processing on the headphone channel remains standard. In this mode, the IC is comparable to the MSP 34x1G. 02_{hex} MULTI_CHANNEL: This mode is used for surround sound with more than 2 channels. The surround processing block is active and its left and right outputs are distributed to the loudspeaker output channel, its center and surround outputs are distributed to the headphone output channel. No headphone processing is possible. In this mode, it is convenient to select the C/S pins by setting bit[15] to 1. 03_{hex} MULTI_CHANNEL_CENTER: This mode is used for surround sound with more than 2 channels. The surround processing block is active and its left and right outputs are distributed to the loudspeaker output channel, its center and surround outputs are distributed to the headphone output channel. Just after the volume control, the center signal is distributed to the left and right loudspeaker outputs as well as to the center outputs. The left and right signals can be accessed via the feedback path to the source selector. No headphone processing is possible. In this mode, it is convenient to select the C/S pins by setting bit[15] to 1.	CHAN_CONF
	bit[7:0] Tone control mode center channel 00_{hex} Bass/Treble for center channel (same setting as surround chan.) 01_{hex} The center signal is processed with an equalizer using the same band setting as for the loudspeaker equalizer. The surround channel is processed with bass/treble. This mode is only allowed in channel configurations 2 and 3.	C_TONE_MODE

Table 3–11: Write Registers on I^2C Subaddress 12_{hex}, continued

Register Address	Function	Name
00 49_{hex}	**Spatial Effects for Surround Processing** bit[15:8] Spatial Effect Strength $7F_{hex}$ Enlargement 100% $3F_{hex}$ Enlargement 50% ... 01_{hex} Enlargement 0.78% 00_{hex} Effect off bit[7:0] 00_{hex} must be 0 Increases the perceived basewidth of the reproduced left and right front channels. Recommended value: 50% = $3F_{hex}$. In contrast to the spatial effect for the loudspeaker channel, the surround spatial effect is optimized for surround sound. Note: If surround sound processing is active, the spatial effect for the loudspeaker channel (Register 05_{hex}) is switched off.	SUR_SPAT
00 $4A_{hex}$	**Virtual Surround Effect Strength** bit[15:8] Virtual Surround Effect Strength $7F_{hex}$ Effect 100% 54_{hex} Effect 66% $3F_{hex}$ Effect 50% ... 01_{hex} Effect 0.78% 00_{hex} Effect off bit[7:0] 00_{hex} must be 0 Strength of the surround effect in PANORAMA or 3D-PANORAMA mode. In other Surround Reproduction Modes, this value must be set to 0. Recommended value: 66% = 54_{hex}.	SUR_3DEFF

Table 3–11: Write Registers on I²C Subaddress 12_{hex}, continued

Register Address	Function	Name
00 $4B_{hex}$	**Surround Processing Mode** bit[15:8] Decoder Matrix 00_{hex} ADAPTIVE (for Dolby Pro Logic and Virtual Dolby Surround) 10_{hex} PASSIVE (for Micronas AROUND) 20_{hex} EFFECT (used for special effects and monophonic Micronas AROUND) bit[7:4] Surround Reproduction 0_{hex} REAR_SPEAKER: The surround signal is reproduced by a rear speaker. 3_{hex} FRONT_SPEAKER: The surround signal is redirected to the front channels. There is no physical rear speaker connected. 5_{hex} PANORAMA: The surround signal is processed and redirected to the left and right front speakers in order to create the illusion of a virtual rear speaker, although no physical rear speaker is connected. 6_{hex} 3D-PANORAMA® (approved by Dolby Laboratories to be compliant with Virtual Dolby Surround technology): The surround signal is processed and redirected to the left and right front speakers in order to create the illusion of a virtual rear speaker, although no physical rear speaker is connected. bit[3:0] Center Mode 0_{hex} PHANTOM mode (no Center speaker connected) 1_{hex} NORMAL mode (small Center speaker) 2_{hex} WIDE mode (large Center speaker) 3_{hex} OFF mode (Center output of the Surround Decoder is discarded. Useful only in special effect modes)	SUR_MODE DEC_MAT SUR_REPRO C_MODE
00 $4C_{hex}$	**Surround Delay** bit[15:8] 05_{hex} 5 ms delay in surround path (lowest) 06_{hex} 6 ms delay in surround path ... $1F_{hex}$ 31 ms delay in surround path (highest)) bit[7:0] 00_{hex} must be 0 For Dolby Surround Pro Logic designs, only 20 ms fixed or 15-30 ms variable delay must be used. This register has no effect in 3D-PANORAMA and PANORAMA mode.	SUR_DELAY
00 $4D_{hex}$	**Noise Generator** bit[15:8] 00_{hex} Noise generator off 80_{hex} Noise generator on bit[7:0] $A0_{hex}$ Noise on left channel $B0_{hex}$ Noise on center channel $C0_{hex}$ Noise on right channel $D0_{hex}$ Noise on surround channel Determines the active channel for the noise generator.	SUR_NOISE

3.3.2.7. Read Registers on I²C Subaddress 13_{hex}

Table 3–12: Read Registers on I²C Subaddress 13_{hex}

Register Address	Function	Name
QUASI-PEAK DETECTOR READOUT		
00 19_{hex} 00 $1A_{hex}$	**Quasi-Peak Detector Readout Left** **Quasi-Peak Detector Readout Right** bit[15:0] 0_{hex}... $7FFF_{hex}$ Values are 16 bit two's complement (only positive). A value of 4000_{hex} corresponds to internal full scale.	QPEAK_L QPEAK_R
MSP 34x2G VERSION READOUT Registers		
00 $1E_{hex}$	**MSP Hardware Version Code** bit[15:8] 02_{hex} MSP 3452G - B3 A change in the hardware version code defines hardware optimizations that may have influence on the chip's behavior. The readout of this register is identical to the hardware version code in the chip's imprint. **MSP Major Revision Code** bit[7:0] 07_{hex} MSP 3452G - B3 The major revision code of the MSP 3452G is 7.	MSP_HARD MSP_REVISION
00 $1F_{hex}$	**MSP Product Code** bit[15:8] 02_{hex} MSP 3402G - B3 $0C_{hex}$ MSP 3412G - B3 16_{hex} MSP 3422G - B3 $2A_{hex}$ MSP 3442G - B3 34_{hex} MSP 3452G - B3 $3E_{hex}$ MSP 3462G - B3 By means of the MSP-Product Code, the control processor is able to decide which TV sound standards and audio baseband features have to be considered. **MSP ROM Version Code** bit[7:0] 43_{hex} MSP 3452G - B3 A change in the ROM version code defines internal software optimizations, that may have influence on the chip's behavior, e.g. new features may have been included. While a software change is intended to create no compatibility problems, customers that want to use the new functions can identify new MSP 34x2G versions according to this number. To avoid compatibility problems with MSP 3410B and MSP 34x0D, an offset of 40_{hex} is added to the ROM version code of the chip's imprint.	MSP_PRODUCT MSP_ROM

3.4. Programming Tips

This section describes the preferred method for initializing the MSP 34x2G. The initialization is grouped into four sections:

– SCART Signal Path (analog signal path)

– Demodulator Input

– SCART and I2S Inputs

– Output Channels

See Fig. 2–1 on page 10 for a complete signal flow.

SCART Signal Path

1. Select analog input for the SCART baseband processing (SCART DSP Input Select) by means of the ACB register.
2. Select the source for each analog SCART output (SCART Output Select) by means of the ACB register.

Demodulator Input

For a complete setup of the TV sound processing from analog IF input to the source selection, the following steps must be performed:

1. Set MODUS register to the preferred mode and Sound IF input.
2. Choose preferred prescale (FM and NICAM) values.
3. Write STANDARD SELECT register.
4. If Automatic Sound Select is not active:
   Choose FM matrix repeatedly according to the sound mode indicated in the STATUS register.

SCART and I^2S Inputs

1. Select preferred prescale for SCART.
2. Select preferred prescale for I^2S inputs (set to 0 dB after RESET).

Output Channels

1. Select the source channel and matrix for each output channel.
2. Set audio baseband processing.
3. Select volume for each output channel.

3.5. Examples of Minimum Initialization Codes

Initialization of the MSP 34x2G according to these listings reproduces sound of the selected standard on the loudspeaker output. All numbers are hexadecimal. The examples have the following structure:

1. Perform an I^2C controlled reset of the IC.
2. Write MODUS register
   (with Automatic Sound Select).
3. Set Source Selection for loudspeaker channel
   (with matrix set to STEREO).
4. Set Prescale
   (FM and/or NICAM and dummy FM matrix).
5. Write STANDARD SELECT register.
6. Set Volume loudspeaker channel to 0 dB.

3.5.1. SCART1 Input to Loudspeaker in Stereo Sound

```
<80  00  80 00>          // reset
<80  00  00 00>
<80 12 00 08 02 20>      // source loudspeaker = scart, stereo
<80 12 00 0d 19 00>      // prescale scart
<80 12 00 00 73 00>      // volume main = 0dB
```

3.5.2. B/G-FM (A2 or NICAM)

```
<80  00  80 00>          // Softreset
<80  00  00 00>
<80  10  00 30  20 03>   // MODUS-Register: Automatic = on
<80  12  00 08  03 20>   // Source Sel. = (St or A) & Ch. Matr. = St
<80  12  00 0E  24 03>   // FM/AM-Prescale = 24hex,
                            FM-Matrix = MONO/SOUNDA
<80  12  00 10  5A 00>   // NICAM-Prescale = 5Ahex
<80  10  00 20  00 03>   // Standard Select: A2 B/G or NICAM B/G
          or
<80  10  00 20  00 08>
<80  12  00 00  73 00>   // Loudspeaker Volume 0 dB
```

3.5.3. BTSC-Stereo

```
<80  00  80 00>          // Softreset
<80  00  00 00>
<80  10  00 30  20 03>   // MODUS-Register: Automatic = on
<80  12  00 08  03 20>   // Source Sel. = (St or A) & Ch. Matr. = St
<80  12  00 0E  24 03>   // FM/AM-Prescale = 24hex,
                            FM-Matrix = Sound A Mono
<80  10  00 20  00 20>   // Standard Select: BTSC-STEREO
<80  12  00 00  73 00>   // Loudspeaker Volume 0 dB
```

3.5.4. BTSC-SAP with SAP at Loudspeaker Channel

<80 00 80 00> // Softreset

<80 00 00 00>

<80 10 00 30 20 03> // MODUS-Register: Automatic = on

<80 12 00 08 04 20> // Source Sel. = (St or B) & Ch. Matr. = St

<80 12 00 0E 24 03> // FM/AM-Prescale = 24_{hex}, FM-Matrix = Sound A Mono

<80 10 00 20 00 21> // Standard Select: BTSC-SAP

<80 12 00 00 73 00> // Loudspeaker Volume 0 dB

3.5.5. FM-Stereo Radio

<80 00 80 00> // Softreset

<80 00 00 00>

<80 10 00 30 20 03> // MODUS-Register: Automatic = on

<80 12 00 08 03 20> // Source Sel. = (St or A) & Ch. Matr. = St

<80 12 00 0E 24 03> // FM/AM-Prescale = 24_{hex}, FM-Matrix = Sound A Mono

<80 10 00 20 00 40> // Standard Select: FM-STEREO-RADIO

<80 12 00 00 73 00> // Loudspeaker Volume 0 dB

3.5.6. Automatic Standard Detection

A detailed software flow diagram is shown in Fig. 3–2 on page 55.

<80 00 80 00> // Softreset

<80 00 00 00>

<80 10 00 30 20 03> // MODUS-Register: Automatic = on

<80 12 00 08 03 20> // Source Sel. = (St or A) & Ch. Matr. = St

<80 12 00 0E 24 03> // FM/AM-Prescale = 24_{hex}, FM-Matrix = Sound A Mono

<80 12 00 10 5A 00> // NICAM-Prescale = $5A_{hex}$

<80 10 00 20 00 01> // Standard Select: Automatic Standard Detection

// Wait till STANDARD RESULT contains a value ≤ 07FF

// IF STANDARD RESULT contains 0000

// do some error handling

// ELSE

<80 12 00 00 73 00> // Loudspeaker Volume 0 dB

3.5.7. Dolby Surround Pro Logic Example

SCART1 Input to Loudspeaker and Center/Surround Output Pins in Dolby Surround Pro Logic (Normal mode).

<80 00 80 00> // reset

<80 00 00 00>

<80 12 00 08 02 20> // source loudspeaker = scart, stereo

<80 12 00 0d 19 00> // prescale scart

<80 12 00 00 70 00> // volume main = –3 dB

<80 12 00 06 73 00> // volume center/surround = 0 dB

<80 12 00 48 82 00> // multi channel mode with C/S outputs used

<80 12 00 49 00 00> // Surround spatial effect = 0%

<80 12 00 4a 00 00> // panorama sound effect = off

<80 12 00 4b 00 01> // Dolby Surround Pro Logic Normal mode

<80 12 00 4c 14 00> // 20 ms Delay

<80 12 00 4d 00 00> // Noise Sequencer = off

3.5.8. Virtual Dolby Surround Example

SCART1 Input to Loudspeaker in 3D-PANORAMA Sound

<80 00 80 00> // reset

<80 00 00 00>

<80 12 00 08 02 20> // source loudspeaker = scart, stereo

<80 12 00 0d 12 00> // prescale scart with some loss

<80 12 00 00 73 00> // volume main = 0 dB

<80 12 00 48 01 00> // two channel virtual surround mode

<80 12 00 49 3F 00> // Surround spatial effect = 50%

<80 12 00 4a 54 00> // panorama sound effect = 66%

<80 12 00 4b 00 60> // adaptive, 3d_panorama, phantom

<80 12 00 4d 00 00> // Noise Sequencer = off

3.5.9. Noise Sequencer for Dolby Pro Logic

// switch into Dolby Pro Logic sound (s.a.). Then:

<80 12 00 4d 80 a0> // noise L

[wait for 2 seconds]

<80 12 00 4d 80 b0> // noise C

[wait for 2 seconds]

<80 12 00 4d 80 c0> // noise R

[wait for 2 seconds]

<80 12 00 4d 80 d0> // noise S

[wait for 2 seconds]

// switch back to normal operation

<80 12 00 4d 00 00> // Noise Sequencer = off

3.5.10. Software Flow for Interrupt driven STATUS Check

A detailed software flow diagram is shown in Fig. 3–2 on page 55.

If the D_CTR_I/O_1 pin of the MSP 34x2G is connected to an interrupt input pin of the controller, the following interrupt handler can be applied to be automatically called with each status change of the MSP 34x2G. The interrupt handler may adjust the TV display according to the new status information.

Interrupt Handler:

<80 11 02 00 <81 dd dd> // Read STATUS

// adjust TV display with given status information

// Return from Interrupt

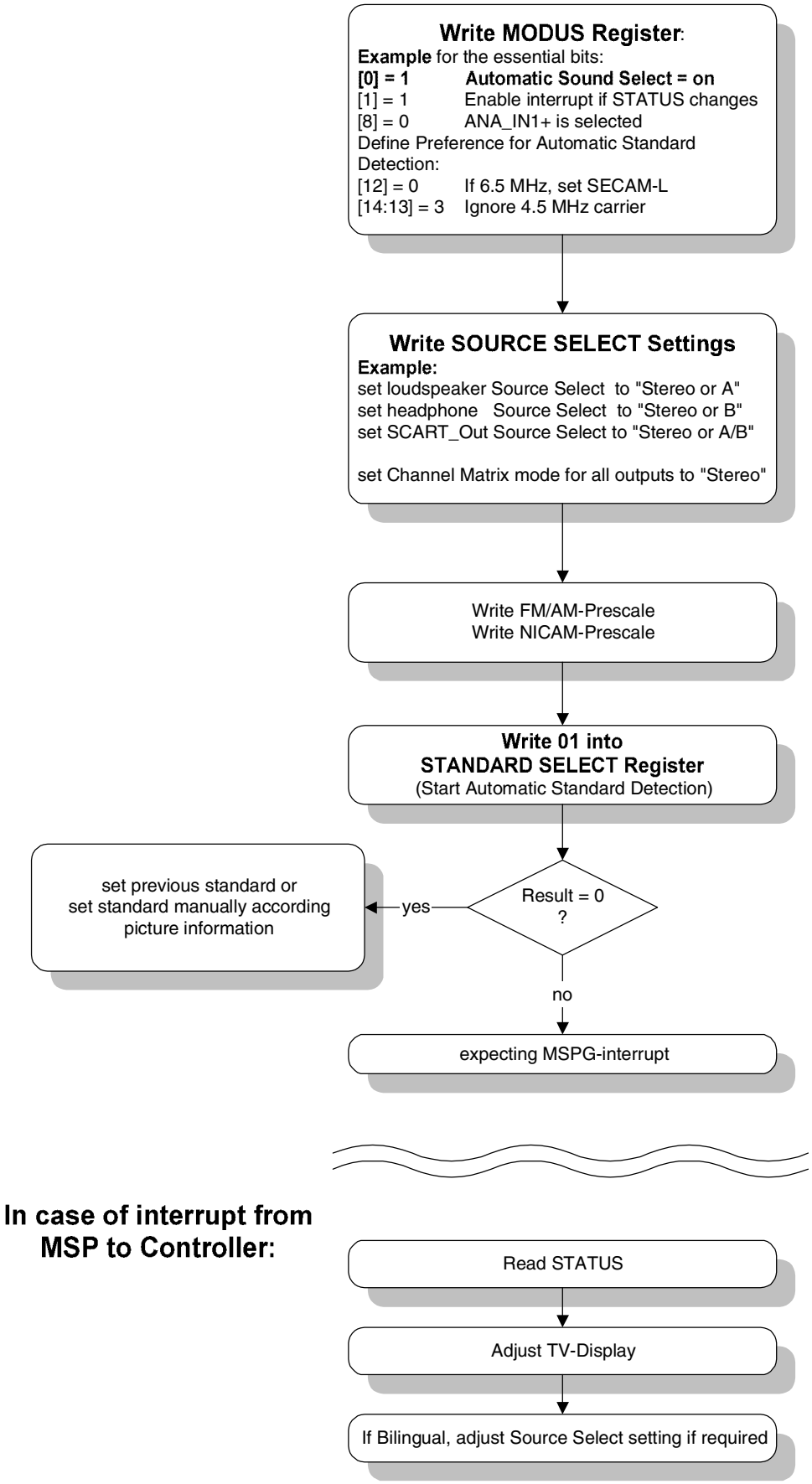

Fig. 3–2: Software flow diagram for a Minimum demodulator setup for a European Multistandard TV set applying the Automatic Sound Select feature

4. Specifications

4.1. Outline Dimensions

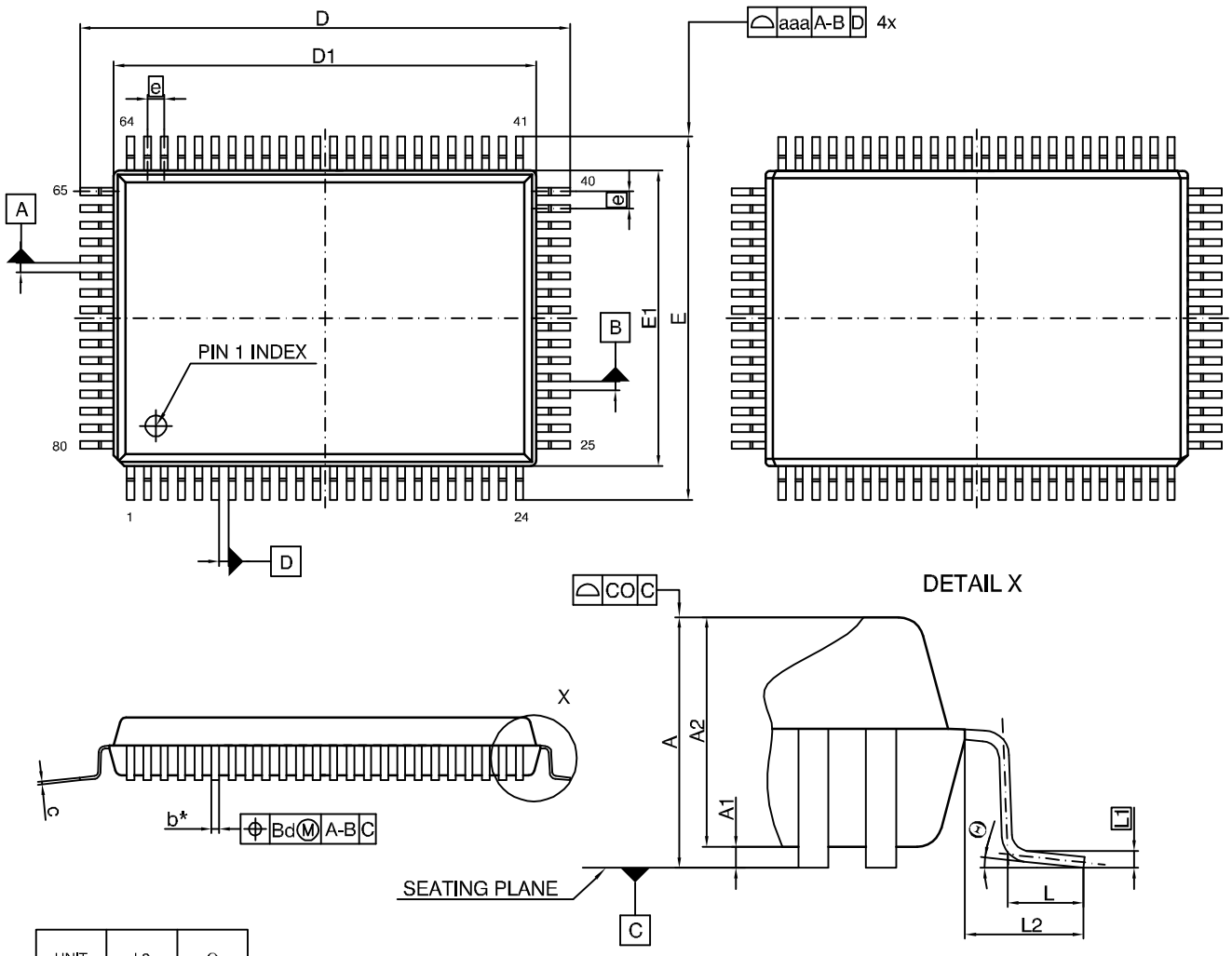

UNIT	L2	Θ
mm	1.7 1.5	0°-7°

* does not include dambar protrusion of 0.08 max. per side

UNIT	A	A1	A2	aaa	b	Bd	c	CO	D	D1	E	E1	e	L	L1
mm	3.4 max	0.5 0.1	2.9 2.5	0.2	0.45 0.29	0.2	0.21 0.13	0.1	23.2	20.0	17.2	14.0	0.8	1.03 0.73	0.25

JEDEC STANDARD		ANSI	ISSUE DATE YY-MM-DD	DRAWING-NO.	SPZG-NO.
ISSUE	ITEM NO.				
B	MS-022		03-04-16	06619.0001.4	SPZG001019_001_01

Fig. 4–1:
PMQFP80-11: Plastic **M**etric **Q**uad **F**lat **P**ackage, **80** leads, $14 \times 20 \times 2.7$ mm^3, high standoff
Ordering code: QA
Weight approximately 1.68 g

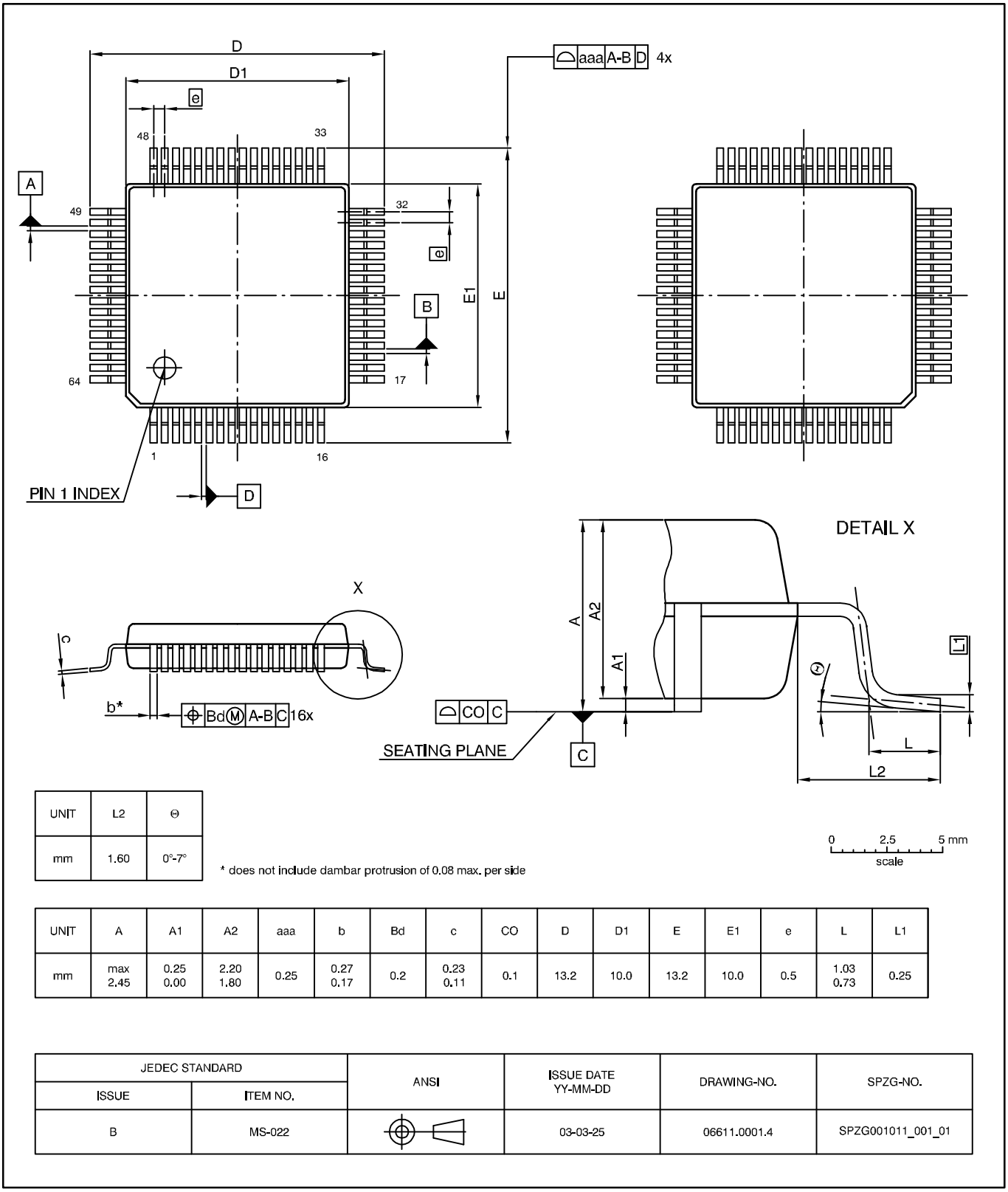

UNIT	L2	Θ
mm	1.60	0°-7°

* does not include dambar protrusion of 0.08 max. per side

UNIT	A	A1	A2	aaa	b	Bd	c	CO	D	D1	E	E1	e	L	L1
mm	max 2.45	0.25 0.00	2.20 1.80	0.25	0.27 0.17	0.2	0.23 0.11	0.1	13.2	10.0	13.2	10.0	0.5	1.03 0.73	0.25

JEDEC STANDARD		ANSI	ISSUE DATE YY-MM-DD	DRAWING-NO.	SPZG-NO.
ISSUE	ITEM NO.				
B	MS-022		03-03-25	06611.0001.4	SPZG001011_001_01

Fig. 4–2:
PMQFP64-2: Plastic **M**etric **Q**uad **F**lat **P**ackage, **64** leads, $10 \times 10 \times 2$ mm^3
Ordering code: QI
Weight approximately 0.5 g

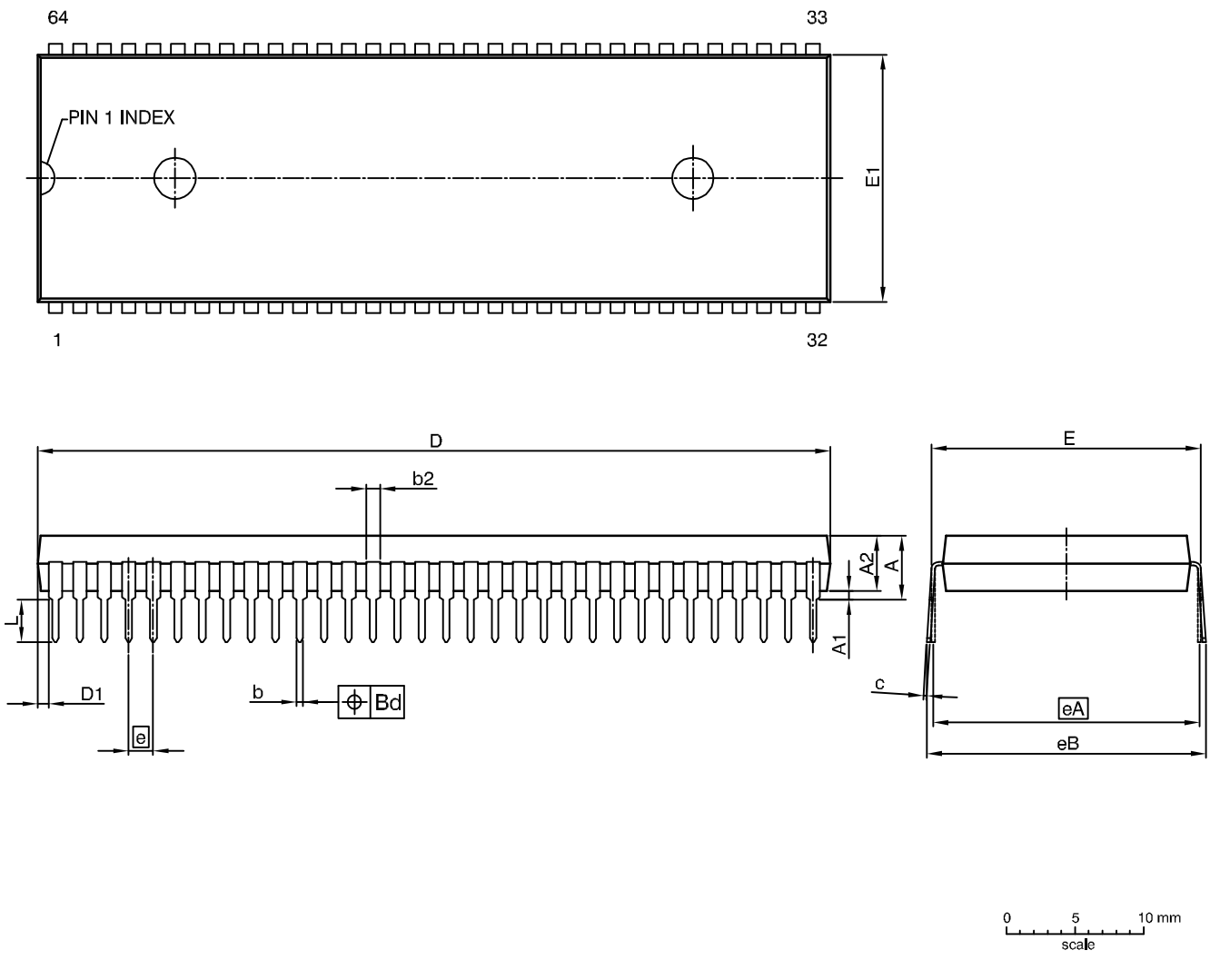

UNIT	A max.	A1 min.	A2 max.	b	b2	Bd	c	D	D1	E	E1	e	eA	eB	L
mm	4.9	0.6	3.9	0.54 0.42	1.05 0.95	0.125	0.34 0.22	57.8 57.6	0.9 0.7	19.3	18.1 17.9	1.778	19.05	20.8 19.8	3.4 3.0

JEDEC STANDARD		ANSI	ISSUE DATE YY-MM-DD	DRAWING-NO.	SPZG-NO.
ISSUE	ITEM NO.				
A	MS-021		03-05-05	06625.0001.4	SPZG001025_001_01

Fig. 4–3:
PSDIP64-1: Plastic **S**hrink **D**ual **I**n-line **P**ackage, **64** leads, 750 mil
Ordering code: PP
Weight approximately 8.77 g

4.2. Pin Connections and Short Descriptions

NC = not connected; leave vacant
LV = if not used, leave vacant
OBL = obligatory; connect as described in circuit diagram
DVSS: if not used, connect to DVSS
AHVSS: connect to AHVSS

Pin No.			Pin Name	Type	Connection (if not used)	Short Description
PMQFP 80-11	PMQFP 64-2	PSDIP 64-1				
1	64	8	NC		LV	Not connected
2	1	9	I2C_CL	IN/OUT	OBL	I^2C clock
3	2	10	I2C_DA	IN/OUT	OBL	I^2C data
4	3	11	I2S_CL	IN/OUT	LV	I^2S clock
5	4	12	I2S_WS	IN/OUT	LV	I^2S word strobe
6	5	13	I2S_DA_OUT	OUT	LV	I^2S data output
7	6	14	I2S_DA_IN1	IN	LV	I^2S1 data input
8	7	15	ADR_DA	OUT	LV	ADR data output
9	8	16	ADR_WS	OUT	LV	ADR word strobe
10	9	17	ADR_CL	OUT	LV	ADR clock
11	–	–	DVSUP		OBL	Digital power supply 5 V
12	–	–	DVSUP		OBL	Digital power supply 5 V
13	10	18	DVSUP		OBL	Digital power supply 5 V
14	–	–	DVSS		OBL	Digital ground
15	–	–	DVSS		OBL	Digital ground
16	11	19	DVSS		OBL	Digital ground
17	12	20	I2S_DA_IN2	IN	LV	I^2S2-data input
18	13	21	NC		LV	Not connected
19	14	22	NC		LV	Not connected
20	15	23	NC		LV	Not connected
21	16	24	RESETQ	IN	OBL	Power-on-reset
22	–	–	NC		LV	Not connected
23	–	–	NC		LV	Not connected
24	17	25	DACA_R	OUT	LV	Headphone out, right
25	18	26	DACA_L	OUT	LV	Headphone out, left
26	19	27	VREF2		OBL	Reference ground 2
27	20	28	DACM_R	OUT	LV	Loudspeaker out, right

Pin No.			Pin Name	Type	Connection (if not used)	Short Description
PMQFP 80-11	PMQFP 64-2	PSDIP 64-1				
28	21	29	DACM_L	OUT	LV	Loudspeaker out, left
29	22	30	DACM_C	OUT	LV	Center output
30	23	31	DACM_SUB	OUT	LV	Subwoofer output
31	24	32	DACM_S	OUT	LV	Surround output
32	–	–	NC		LV	Not connected
33	25	33	SC2_OUT_R	OUT	LV	SCART output 2, right
34	26	34	SC2_OUT_L	OUT	LV	SCART output 2, left
35	27	35	VREF1		OBL	Reference ground 1
36	28	36	SC1_OUT_R	OUT	LV	SCART output 1, right
37	29	37	SC1_OUT_L	OUT	LV	SCART output 1, left
38	30	38	CAPL_A		OBL	Volume capacitor AUX
39	31	39	AHVSUP		OBL	Analog power supply 8 V
40	32	40	CAPL_M		OBL	Volume capacitor MAIN
41	–	–	NC		LV	Not connected
42	–	–	NC		LV	Not connected
43	–	–	AHVSS		OBL	Analog ground
44	33	41	AHVSS		OBL	Analog ground
45	34	42	AGNDC		OBL	Analog reference voltage
46	–	–	NC		LV or AHVSS	Not connected
47	35	43	SC4_IN_L	IN	LV	SCART 4 input, left
48	36	44	SC4_IN_R	IN	LV	SCART 4 input, right
49	37	45	ASG		AHVSS	Analog Shield Ground
50	38	46	SC3_IN_L	IN	LV	SCART 3 input, left
51	39	47	SC3_IN_R	IN	LV	SCART 3 input, right
52	40	48	ASG		AHVSS	Analog Shield Ground
53	41	49	SC2_IN_L	IN	LV	SCART 2 input, left
54	42	50	SC2_IN_R	IN	LV	SCART 2 input, right
55	43	51	ASG		AHVSS	Analog Shield Ground
56	44	52	SC1_IN_L	IN	LV	SCART 1 input, left
57	45	53	SC1_IN_R	IN	LV	SCART 1 input, right

Pin No. PMQFP 80-11	PMQFP 64-2	PSDIP 64-1	Pin Name	Type	Connection (if not used)	Short Description
58	46	54	VREFTOP		OBL	Reference voltage IF A/D converter
59	–	–	NC		LV	Not connected
60	47	55	MONO_IN	IN	LV	Mono input
61	–	–	AVSS		OBL	Analog ground
62	48	56	AVSS		OBL	Analog ground
63	–	–	NC		LV	Not connected
64	–	–	NC		LV	Not connected
65	–	–	AVSUP		OBL	Analog power supply 5 V
66	49	57	AVSUP		OBL	Analog power supply 5 V
67	50	58	ANA_IN1+	IN	LV	IF input 1
68	51	59	ANA_IN–	IN	AVSS via 56 pF / LV	IF common (can be left vacant, only if IF input 1 is also not in use)
69	52	60	ANA_IN2+	IN	AVSS via 56 pF / LV	IF input 2 (can be left vacant, only if IF input 1 is also not in use)
70	53	61	TESTEN	IN	OBL	Test pin
71	54	62	XTAL_IN	IN	OBL	Crystal oscillator
72	55	63	XTAL_OUT	OUT	OBL	Crystal oscillator
73	56	64	TP		LV	Test pin
74	57	1	AUD_CL_OUT	OUT	LV	Audio clock output (18.432 MHz)
75	58	2	NC		LV	Not connected
76	59	3	NC		LV	Not connected
77	60	4	D_CTR_I/O_1	IN/OUT	LV	D_CTR_I/O_1
78	61	5	D_CTR_I/O_0	IN/OUT	LV	D_CTR_I/O_0
79	62	6	ADR_SEL	IN	OBL	I^2C Bus address select
80	63	7	STANDBYQ	IN	OBL	Stand-by (low-active)

4.3. Pin Descriptions

Pin numbers refer to the PMQFP80-11 package.

Pin 1, **NC** – Pin not connected.

Pin 2, **I2C_CL** – I^2C Clock Input/Output (Fig. 4–14)
Via this pin, the I^2C-bus clock signal has to be supplied. The signal can be pulled down by the MSP in case of wait conditions.

Pin 3, **I2C_DA** – I^2C Data Input/Output (Fig. 4–14)
Via this pin, the I^2C-bus data is written to or read from the MSP.

Pin 4, **I2S_CL** – I^2S Clock Input/Output (Fig. 4–15)
Clock line for the I^2S bus. In master mode, this line is driven by the MSP; in slave mode, an external I^2S clock has to be supplied.

Pin 5, **I2S_WS** – I^2S Word Strobe Input/Output (Fig. 4–15)
Word strobe line for the I^2S bus. In master mode, this line is driven by the MSP; in slave mode, an external I^2S word strobe has to be supplied.

Pin 6, **I2S_DA_OUT** – I^2S Data Output (Fig. 4–19)
Output of digital serial sound data of the MSP on the I^2S bus.

Pin 7, **I2S_DA_IN1** – I^2S Data Input 1 (Fig. 4–11)
First input of digital serial sound data to the MSP via the I^2S bus.

Pin 8, **ADR_DA** – ADR Bus Data Output (Fig. 4–19)
Output of digital serial data to the DRP 3510A via the ADR bus.

Pin 9, **ADR_WS** – ADR Bus Word Strobe Output (Fig. 4–19)
Word strobe output for the ADR bus.

Pin 10, **ADR_CL** – ADR Bus Clock Output (Fig. 4–19)
Clock line for the ADR bus.

Pins 11, 12, 13, **DVSUP*** – Digital Supply Voltage
Power supply for the digital circuitry of the MSP. Must be connected to a +5 V power supply.

Pins 14, 15, 16, **DVSS*** – Digital Ground
Ground connection for the digital circuitry of the MSP.

Pin 17, **I2S_DA_IN2** – I^2S Data Input 2 (Fig. 4–11)
Second input of digital serial sound data to the MSP via the I^2S bus.

Pins 18, 19, 20, **NC** – Pins not connected.

Pin 21, **RESETQ** – Reset Input (Fig. 4–11)
In the steady state, high level is required. A low level resets the MSP 34x2G.

Pins 22, 23, **NC** – Pins not connected.

Pins 24, 25, **DACA_R/L** – Headphone Outputs (Fig. 4–17)
Output of the headphone signal. A 1-nF capacitor to AHVSS must be connected to these pins. The DC offset on these pins depends on the selected headphone volume.

Pin 26, **VREF2** – Reference Ground 2
Reference analog ground. This pin must be connected separately to the single ground point (AHVSS). VREF2 serves as a clean ground and should be used as the reference for analog connections to the loudspeaker and headphone outputs.

Pins 27, 28, **DACM_R/L** – Loudspeaker Outputs (Fig. 4–17)
Output of the loudspeaker signal. A 1-nF capacitor to AHVSS must be connected to these pins. The DC offset on these pins depends on the selected loudspeaker volume.

Pin 29, **DACM_C** – Center Output (Fig. 4–17)
Output of the center loudspeaker signal. A 1-nF capacitor to AHVSS must be connected to these pins.
If active (HP/CS = 1), the DC offset on these pins depends on the selected headphone volume.

Pin 30, **DACM_SUB** – Subwoofer Output (Fig. 4–17)
Output of the subwoofer signal. A 1-nF capacitor to AHVSS must be connected to this pin. Due to the low frequency content of the subwoofer output, the value of the capacitor may be increased for better suppression of high-frequency noise. The DC offset on this pin depends on the selected loudspeaker volume.

Pins 31, **DACM_S** – Surround Output (Fig. 4–17)
Output of the surround loudspeaker signal. A 1-nF capacitor to AHVSS must be connected to these pins. If active (HP/CS = 1), the DC offset on these pins depends on the selected headphone volume.

Pin 32 **NC** – Pin not connected.

Pins 33, 34, **SC2_OUT_R/L** – SCART2 Outputs (Fig. 4–18)
Output of the SCART2 signal. Connections to these pins must use a 100-Ω series resistor and are intended to be AC-coupled.

Pin 35, **VREF1** – Reference Ground 1
Reference analog ground. This pin must be connected separately to the single ground point (AHVSS). VREF1 serves as a clean ground and should be used as the reference for analog connections to the SCART outputs.

Pins 36, 37, **SC1_OUT_R/L** – SCART1 Outputs (Fig. 4–18)
Output of the SCART1 signal. Connections to these pins must use a 100-Ω series resistor and are intended to be AC-coupled.

Pin 38, **CAPL_A** – Volume Capacitor Headphone (Fig. 4–20)
A 10-µF capacitor to AHVSUP must be connected to this pin. It serves as a smoothing filter for headphone volume changes in order to suppress audible plops. The value of the capacitor can be lowered to 1-µF if faster response is required. The area encircled by the trace lines should be minimized; keep traces as short as possible. This input is sensitive for magnetic induction.

Pin 39, **AHVSUP*** – Analog Power Supply High Voltage
Power is supplied via this pin for the analog circuitry of the MSP (except IF input). This pin must be connected to the +8 V supply.

Pin 40, **CAPL_M** – Volume Capacitor Loudspeaker (Fig. 4–20)
A 10-µF capacitor to AHVSUP must be connected to this pin. It serves as a smoothing filter for loudspeaker volume changes in order to suppress audible plops. The value of the capacitor can be lowered to 1 µF if faster response is required. The area encircled by the trace lines should be minimized; keep traces as short as possible. This input is sensitive for magnetic induction.

Pins 41, 42, **NC** – Pins not connected.

Pins 43, 44, **AHVSS*** – Ground for Analog Power Supply High Voltage
Ground connection for the analog circuitry of the MSP (except IF input).

Pin 45, **AGNDC** – Internal Analog Reference Voltage
This pin serves as the internal ground connection for the analog circuitry (except IF input). It must be connected to the VREF pins with a 3.3-µF and a 100-nF capacitor in parallel. This pins shows a DC level of typically 3.73 V.

Pin 46, **NC** – Pin not connected.

Pins 47, 48, **SC4_IN_L/R** – SCART4 Inputs (Fig. 4–10)
The analog input signal for SCART4 is fed to this pin. Analog input connection must be AC-coupled.

Pin 49, **ASG** – Analog Shield Ground
Analog ground (AHVSS) should be connected to this pin to reduce cross-coupling between SCART inputs.

Pins 50, 51, **SC3_IN_L/R** – SCART3 Inputs (Fig. 4–10)
The analog input signal for SCART3 is fed to this pin. Analog input connection must be AC-coupled.

Pin 52, **ASG** – Analog Shield Ground
Analog ground (AHVSS) should be connected to this pin to reduce cross-coupling between SCART inputs.

Pins 53, 54 **SC2_IN_L/R** – SCART2 Inputs (Fig. 4–10)
The analog input signal for SCART2 is fed to this pin. Analog input connection must be AC-coupled.

Pin 55, **ASG** – Analog Shield Ground
Analog ground (AHVSS) should be connected to this pin to reduce cross-coupling between SCART inputs.

Pins 56, 57 **SC1_IN_L/R** – SCART1 Inputs (Fig. 4–10)
The analog input signal for SCART1 is fed to this pin. Analog input connection must be AC-coupled.

Pin 58, **VREFTOP** – Reference Voltage IF A/D Converter (Fig. 4–12)
Via this pin, the reference voltage for the IF A/D converter is decoupled. It must be connected to AVSS pins with a 10-µF and a 100-nF capacitor in parallel. Traces must be kept short.

Pin 59, **NC** – Pin not connected.

Pin 60 **MONO_IN** – Mono Input (Fig. 4–9)
The analog mono input signal is fed to this pin. Analog input connection must be AC-coupled.

Pins 61, 62, **AVSS*** – Ground for Analog Power Supply Voltage
Ground connection for the analog IF input circuitry of the MSP.

Pins 63, 64, **NC** – Pins not connected.

Pins 65, 66, **AVSUP*** – Analog Power Supply Voltage
Power is supplied via this pin for the analog IF input circuitry of the MSP. This pin must be connected to the +5 V supply.

Pin 67, **ANA_IN1+** – IF Input 1 (Fig. 4–12)
The analog sound IF signal is supplied to this pin. Inputs must be AC-coupled. This pin is designed as symmetrical input: ANA_IN1+ is internally connected to one input of a symmetrical op amp, ANA_IN- to the other.

Pin 68, **ANA_IN–** – IF Common (Fig. 4–12)
This pins serves as a common reference for ANA_IN1/2+ inputs.

Pin 69, **ANA_IN2**+ – IF Input 2 (Fig. 4–12)
The analog sound if signal is supplied to this pin. Inputs must be AC-coupled. This pin is designed as symmetrical input: ANA_IN2+ is internally connected to one input of a symmetrical op amp, ANA_IN– to the other.

Pin 70, **TESTEN** – Test Enable Pin (Fig. 4–11)
This pin enables factory test modes. For normal operation, it must be connected to ground.

Pins 71, 72 **XTAL_IN, XTAL_OUT** – Crystal Input and Output Pins (Fig. 4–16)
These pins are connected to an 18.432 MHz crystal oscillator which is digitally tuned by integrated shunt capacitances. An external clock can be fed into XTAL_IN. The audio clock output signal AUD_CL_OUT is derived from the oscillator. External capacitors at each crystal pin to ground (AVSS) are required. It should be verified by layout, that no supply current for the digital circuitry is flowing through the ground connection point.

Pin 73, **TP** – This pin enables factory test modes. For normal operation, it must be left vacant.

Pin 74, **AUD_CL_OUT** – Audio Clock Output (Fig. 4–16)
This is the 18.432 MHz main clock output.

Pins 75, 76, **NC** – Pins not connected.

Pins 77, 78, **D_CTR_I/O_1/0** – Digital Control Input/ Output Pins (Fig. 4–15)
These pins serve as general purpose input/output pins. Pin D_CTR_I/O_1 can be used as an interrupt request pin to the controller.

Pin 79, **ADR_SEL** – I^2C Bus Address Select (Fig. 4–13)
By means of this pin, one of three device addresses for the MSP can be selected. The pin can be connected to ground (I^2C device addresses $80/81_{hex}$), to +5 V supply ($84/85_{hex}$), or left open ($88/89_{hex}$).

Pin 80, **STANDBYQ** – Stand-by
In normal operation, this pin must be High. If the MSP 34x2G is switched off by first pulling STANDBYQ low and then (after >1 µs delay) switching off the 5 V, but keeping the 8-V power supply (**'Stand-by'-mode**), the SCART switches maintain their position and function.

*** Application Note:**
All ground pins should be connected to one low-resistive ground plane. All supply pins should be connected separately with short and low-resistive lines to the power supply. Decoupling capacitors from DVSUP to DVSS, AVSUP to AVSS, and AHVSUP to AHVSS are recommended as closely as possible to these pins. Decoupling of DVSUP and DVSS is most important. We recommend using more than one capacitor. By choosing different values, the frequency range of active decoupling can be extended. In our application boards we use: 220 pF, 470 pF, 1.5 nF, and 10 µF. The capacitor with the lowest value should be placed nearest to the DVSUP and DVSS pins.

The ASG pins should be connected as closely as possible to the MSP ground. If they are lead with the SCART-inputs as shielding lines, they should not be connected to ground at the SCART connector.

4.4. Pin Configurations

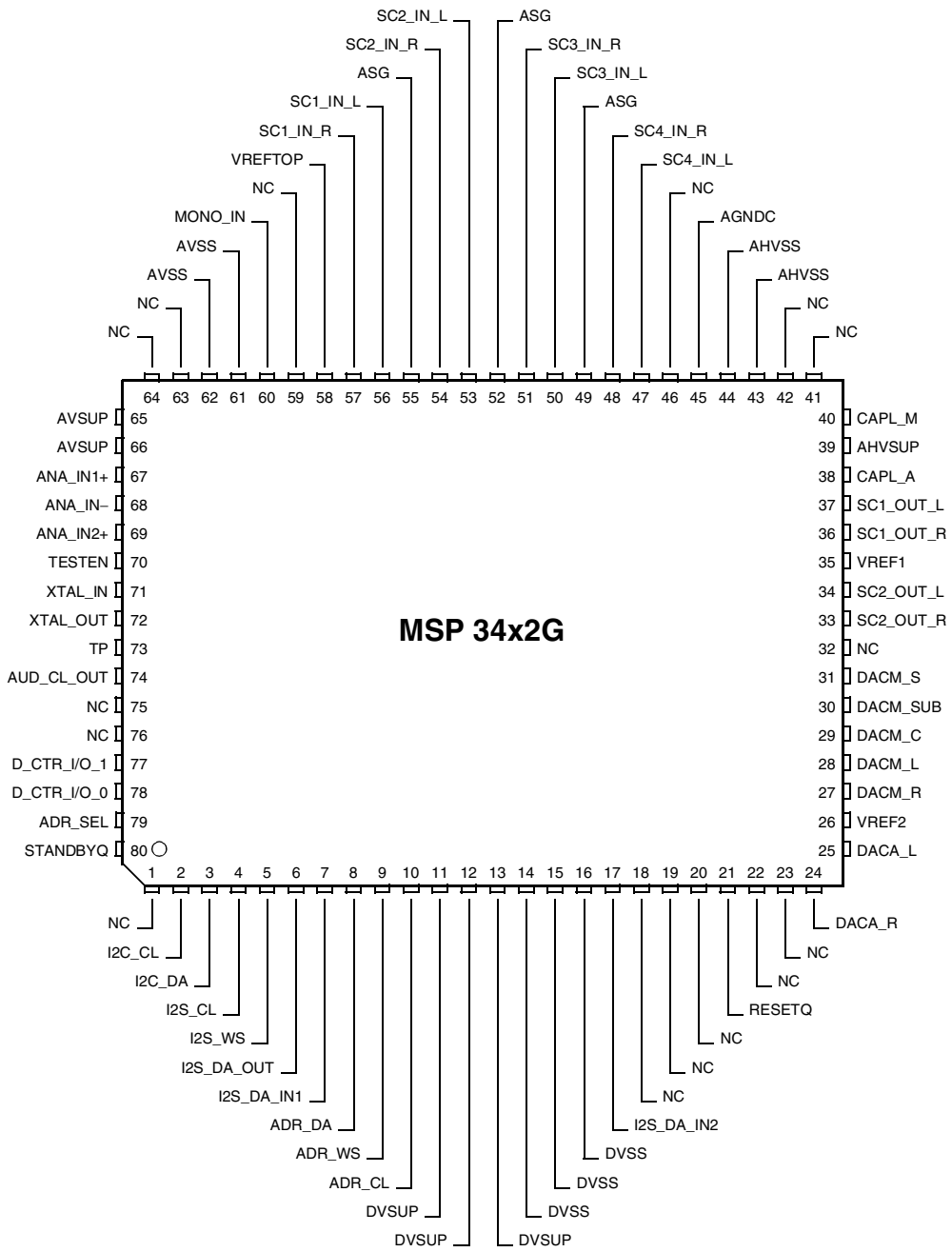

Fig. 4–4: PMQFP80-11 package

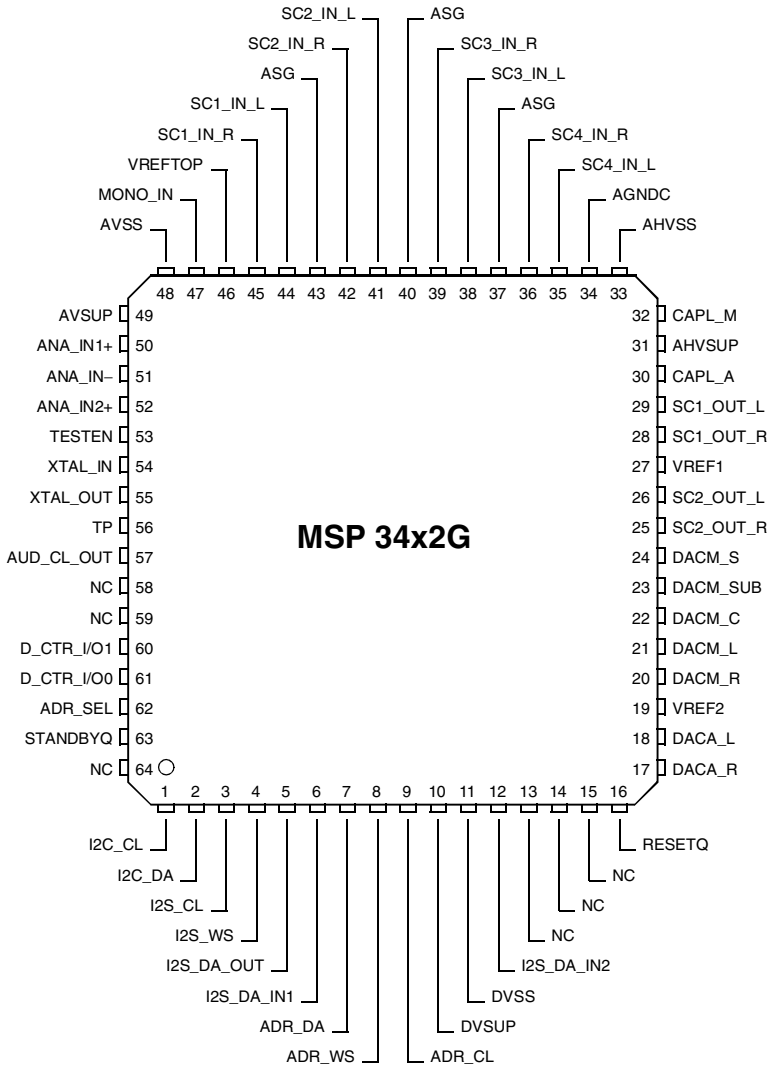

Fig. 4–5: PMQFP64-2 package

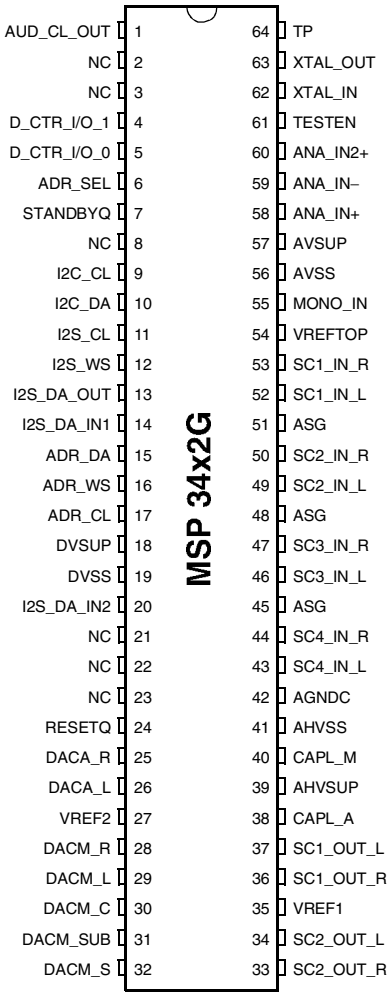

Fig. 4–6: PSDIP64-1 package

4.5. Pin Circuits

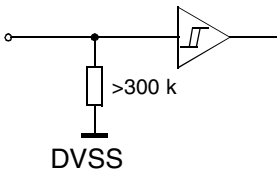

Fig. 4–7: Input Pin: **RESETQ**

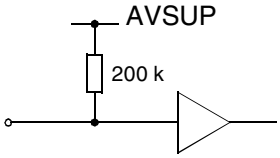

Fig. 4–8: Input Pin: **TESTEN**

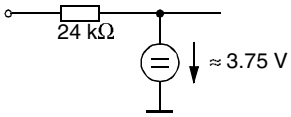

Fig. 4–9: Input Pin: **MONO_IN**

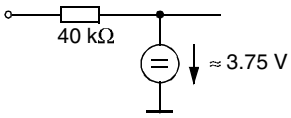

Fig. 4–10: Input Pins: **SC4-1_IN_L/R**

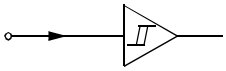

Fig. 4–11: Input Pins:
I2S_DA_IN1, I2S_DA_IN2, STANDBYQ

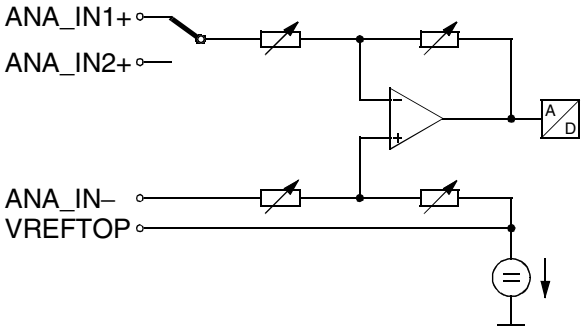

Fig. 4–12: Input Pins 58, 67, 68, and 69:
VREFTOP, ANA_IN1+, ANA_IN-, ANA_IN2+

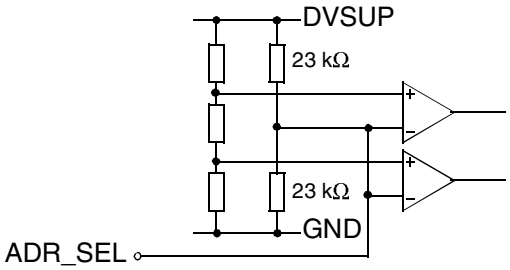

Fig. 4–13: Input Pin: **ADR_SEL**

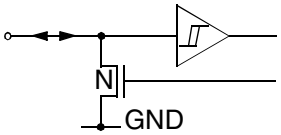

Fig. 4–14: Input/Output Pins: **I2C_CL, I2C_DA**

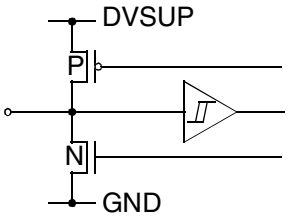

Fig. 4–15: Input/Output Pins:
I2S_CL, I2S_WS, D_CTR_I/O_1, D_CTR_I/O_0

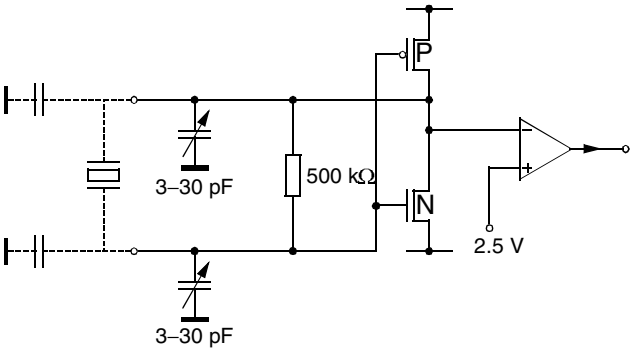

Fig. 4–16: Input/Output Pins:
XTAL_IN, XTAL_OUT, AUD_CL_OUT

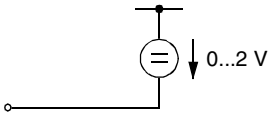

Fig. 4–20: Capacitor Pins: **CAPL_A, CAPL_M**

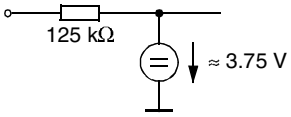

Fig. 4–21: Pin: **AGNDC**

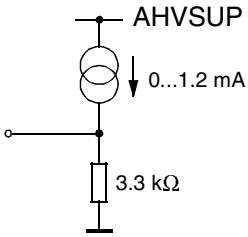

Fig. 4–17: Output Pins:
DACA_R/L, DACM_R/L, DACM_SUB, DACM_C/S

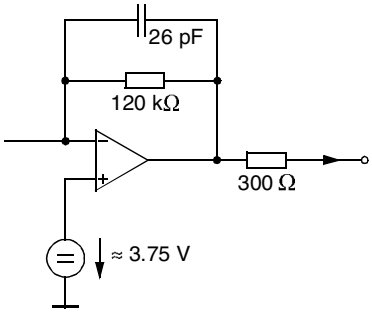

Fig. 4–18: Output Pins:
SC_2_OUT_R/L, SC_1_OUT_R/L

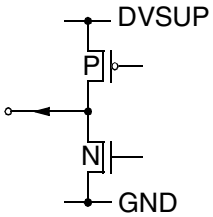

Fig. 4–19: Output Pins:
I2S_DA_OUT, ADR_DA, ADR_WS, ADR_CL

4.6. Electrical Characteristics

Abbreviations:

tbd = to be defined
vacant = not applicable
positive current values mean current flowing into the chip

4.6.1. Absolute Maximum Ratings

Stresses beyond those listed in the "Absolute Maximum Ratings" may cause permanent damage to the device. This is a stress rating only. Functional operation of the device at these conditions is not implied. Exposure to absolut maximum rating conditions for extended periods will affect device reliability.

All voltages listed are referenced to ground (0 V, V_{SS}), except where noted.

All grounds must be externally connected low ohmic.

This device contains circuitry to protect the inputs and outputs against damage due to high static voltages or electric fields; however, it is advised that normal precautions be taken to avoid application of any voltage higher than absolut maximum-rated voltages to this high-impedance circuit.

Table 4–1: Absolute Maximum Ratings

Symbol	Parameter	Pin Name	Limit Values		Unit
			Min.	Max.	
T_A [1)]	Ambient Operating Temperature PSDIP64-1 PMQFP80-11 PMQFP64-2	–	0	 70 70 65	°C
T_C	Case Operating Temperature PSDIP64-1 PMQFP80-11 PMQFP64-2	–	0	 85 95 100	°C
T_S	Storage Temperature	–	–40	125	°C
P_{MAX}	Maximum Power Dissipation PSDIP64-1 PMQFP80-11 PMQFP64-2			 1300 1000 930	 mW mW mW
V_{SUP1}	Supply Voltage 1	AHVSUP	–0.3	9.0	V
V_{SUP2}	Supply Voltage 2	DVSUP	–0.3	6.0	V
V_{SUP3}	Supply Voltage 3	AVSUP	–0.3	6.0	V
V_{Idig}	Input Voltage, all Digital Inputs		–0.3	V_{SUP2}+0.3	V
I_{Idig}	Input Current, all Digital Pins	–	–20	+20	mA

[1)] Measured on standard board according to JESD 51 Standard with maximum power consumption allowed for this package.

Table 4–1: Absolute Maximum Ratings, continued

Symbol	Parameter	Pin Name	Limit Values		Unit
			Min.	Max.	
V_{Iana}	Input Voltage, all Analog Inputs	SCn_IN_s,[1] MONO_IN	–0.3	V_{SUP1}+0.3	V
I_{Iana}	Input Current, all Analog Inputs	SCn_IN_s,[1] MONO_IN	–5	+5	mA
I_{Oana}	Output Current, all SCART Outputs	SCn_OUT_s[1]	[2]	[2]	
I_{Oana}	Output Current, all Analog Outputs except SCART Outputs	DACM_r,[1] DACA_s	[2]	[2]	
I_{Cana}	Output Current, other pins connected to capacitors	CAPL_A, CAPL_M, AGNDC	[2]	[2]	

[1] “n” means “1”, “2”, “3”, or “4”; “r” means “L”, “R”, “C”, or “S”; “s” means “L” or “R”
[2] The analog outputs are short-circuit proof with respect to Supply Voltage 1 and ground.

4.6.2. Recommended Operating Conditions

Functional operation of the device beyond those indicated in the "Recommended Operating Conditions/Characteristics" is not implied and will result in unpredictable behavior of the device and may result in device destruction.

All voltages listed are referenced to ground (V_{SS} = 0 V) except where noted.

All grounds must be externally connected low ohmic.

Do not insert the device into a live socket. Instead, apply power by switching on the external power supply. For power-up/-down sequences, see the instructions in Section 4.6.3.3. of this document.

4.6.2.1. General Recommended Operating Conditions

Symbol	Parameter	Pin Name	Limit Values			Unit
			Min.	Typ.	Max.	
T_A	Ambient Operating Temperature PSDIP64-1 PMQFP80-11 PMQFP64-2	–			[1] 70 70 65	°C
T_C	Case Operating Temperature PSDIP64-1 PMQFP80-11 PMQFP64-2	–			 85 95 100	°C
V_{SUP1}	Supply Voltage 1 (AHVSUP = 8 V)	AHVSUP	7.6	8.0	8.7	V
	Supply Voltage 1 (AHVSUP = 5 V)		4.75	5.0	5.25	V
V_{SUP2}	Supply Voltage 2	DVSUP	4.75	5.0	5.25	V
V_{SUP3}	Supply Voltage 3	AVSUP	4.75	5.0	5.25	V
t_{STBYQ1}	STANDBYQ Setup Time before Turn-off of Second Supply Voltage	STANDBYQ, DVSUP	1			µs

[1] A power-optimized board layout is recommended. The Case Operating Temperature mentioned in the Recommended Operating Conditions must not be exceeded at worst case conditions of the application.

4.6.2.2. Analog Input and Output Recommendations

Symbol	Parameter	Pin Name	Limit Values			Unit
			Min.	Typ.	Max.	
C_{AGNDC}	AGNDC-Filter-Capacitor	AGNDC	–20%	3.3		µF
	Ceramic Capacitor in Parallel		–20%	100		nF
C_{inSC}	DC-Decoupling Capacitor in front of SCART Inputs	SCn_IN_s[1)]	–20%	330		nF
V_{inSC}	SCART Input Level				2.0	V_{RMS}
V_{inMONO}	Input Level, Mono Input	MONO_IN			2.0	V_{RMS}
R_{LSC}	SCART Load Resistance	SCn_OUT_s[1)]	10			kΩ
C_{LSC}	SCART Load Capacitance				6.0	nF
C_{VMA}	Main/AUX Volume Capacitor	CAPL_M, CAPL_A		10		µF
C_{FMA}	Main/AUX Filter Capacitor	DACM_r,[1)] DACA_s	–10%	1	+10%	nF

[1)] “n” means “1”, “2”, “3”, or “4”; “r” means “L”, “R”, “C”, or “S”; “s” means “L” or “R”

4.6.2.3. Recommendations for Analog Sound IF Input Signal

Symbol	Parameter	Pin Name	Limit Values			Unit
			Min.	Typ.	Max.	
$C_{VREFTOP}$	VREFTOP-Filter-Capacitor	VREFTOP	–20%	10		µF
	Ceramic Capacitor in Parallel		–20%	100		nF
F_{IF_FMTV}	Analog Input Frequency Range for TV Applications	ANA_IN1+, ANA_IN2+, ANA_IN–	0		9	MHz
$F_{IF\_FMRADIO}$	Analog Input Frequency for FM-Radio Applications			10.7		MHz
V_{IF_FM}	Analog Input Range FM/NICAM		0.1	0.8	3	V_{pp}
V_{IF_AM}	Analog Input Range AM/NICAM		0.1	0.45	0.8	V_{pp}
R_{FMNI}	Ratio: NICAM Carrier/FM Carrier (unmodulated carriers) BG: I:		 –20 –23	 –7 –10	 0 0	 dB dB
R_{AMNI}	Ratio: NICAM Carrier/AM Carrier (unmodulated carriers)		–25	–11	0	dB
R_{FM}	Ratio: FM-Main/FM-Sub Satellite			7		dB
$R_{FM1/FM2}$	Ratio: FM1/FM2 German FM-System			7		dB
R_{FC}	Ratio: Main FM Carrier/ Color Carrier		15	–	–	dB
R_{FV}	Ratio: Main FM Carrier/ Luma Components		15	–	–	dB
PR_{IF}	Passband Ripple		–	–	±2	dB
SUP_{HF}	Suppression of Spectrum above 9.0 MHz (not for FM Radio)		15		–	dB
FM_{MAX}	Maximum FM-Deviation (approx.) normal mode HDEV2: high deviation mode HDEV3: very high deviation mode				 ±180 ±360 ±540	 kHz kHz kHz

4.6.2.4. Crystal Recommendations

Symbol	Parameter	Pin Name	Min.	Typ.	Max.	Unit
General Crystal Recommendations						
f_P	Crystal Parallel Resonance Frequency at 12 pF Load Capacitance			18.432		MHz
R_R	Crystal Series Resistance			8	25	Ω
C_0	Crystal Shunt (Parallel) Capacitance			6.2	7.0	pF
C_L	External Load Capacitance[1)]	XTAL_IN, XTAL_OUT	PSDIP PMQFP	approx. 1.5 approx. 3.3		pF pF
Crystal Recommendations for Master-Slave Applications (MSP-clock must perform synchronization to I^2S clock)						
f_{TOL}	Accuracy of Adjustment		–20		+20	ppm
D_{TEM}	Frequency Variation versus Temperature		–20		+20	ppm
C_1	Motional (Dynamic) Capacitance		19	24		fF
f_{CL}	Required Open Loop Clock Frequency (T_{amb} = 25 °C)	AUD_CL_OUT	18.431		18.433	MHz
Crystal Recommendations for FM / NICAM Applications (No MSP-clock synchronization to I^2S clock possible)						
f_{TOL}	Accuracy of Adjustment		–30		+30	ppm
D_{TEM}	Frequency Variation versus Temperature		–30		+30	ppm
C_1	Motional (Dynamic) Capacitance		15			fF
f_{CL}	Required Open Loop Clock Frequency (T_{amb} = 25 °C)	AUD_CL_OUT	18.4305		18.4335	MHz
Crystal Recommendations for all analog FM/AM Applications (No MSP-clock synchronization to I^2S clock possible)						
f_{TOL}	Accuracy of Adjustment		–100		+100	ppm
D_{TEM}	Frequency Variation versus Temperature		–50		+50	ppm
f_{CL}	Required Open Loop Clock Frequency (T_{amb} = 25 °C)	AUD_CL_OUT	18.429		18.435	MHz
Amplitude Recommendation for Operation with External Clock Input (C_{load} after reset typ. 22 pF)						
V_{XCA}	External Clock Amplitude	XTAL_IN	0.7			V_{pp}

[1)] External capacitors at each crystal pin to ground are required. They are necessary to tune the open-loop frequency of the internal PLL and to stabilize the frequency in closed-loop operation. Due to different layouts, the accurate capacitor value should be determined with the customer PCB. The suggested values (1.5...3.3 pF) are figures based on experience and should serve as “start value”.

To adjust the capacitor value, reset the MSP. After the reset, no I^2C telegrams should be transmitted. Measure the frequency at AUD_CL_OUT-pin. Change the capacitor value until the free running frequency matches 18.432 MHz as closely as possible. The higher the capacity, the lower the resulting clock frequency.

Note: To minimize adjustment tolerances for all MSP-generations, it is strongly recommended to use the so-called MSP-XTAL-REF ICs (available in all packages) for the capacitor adjustment.

4.6.3. Characteristics

at T_A = 0 to 70 °C, f_{CLOCK} = 18.432 MHz, V_{SUP1} = 7.6 to 8.7 V, V_{SUP2} = 4.75 to 5.25 V for min./max. values
at T_A = 60 °C, f_{CLOCK} = 18.432 MHz, V_{SUP1} = 8 V, V_{SUP2} = 5 V for typical values,
T_J = Junction Temperature
MAIN (M) = Loudspeaker Channel, AUX (A) = Headphone Channel

4.6.3.1. General Characteristics

Symbol	Parameter	Pin Name	Limit Values			Unit	Test Conditions
			Min.	Typ.	Max.		
Supply							
I_{SUP1A}	First Supply Current (active) (AHVSUP = 8 V)	AHVSUP		17 11	25 16	mA mA	Vol. Main and Aux = 0 dB Vol. Main and Aux = -30dB
	First Supply Current (active) (AHVSUP = 5 V)			11 8	17 11	mA mA	Vol. Main and Aux = 0 dB Vol. Main and Aux = -30 dB
I_{SUP2A}	Second Supply Current (active)	DVSUP		75	100	mA	
I_{SUP3A}	Third Supply Current (active)	AVSUP		35	45	mA	
I_{SUP1S}	First Supply Current (AHVSUP = 8 V)	AHVSUP		5.6	7.7	mA	STANDBYQ = low
	First Supply Current (AHVSUP = 5 V)			3.7	5.1	mA	
Clock							
f_{CLOCK}	Clock Input Frequency	XTAL_IN		18.432		MHz	
D_{CLOCK}	Clock High to Low Ratio		45		55	%	
t_{JITTER}	Clock Jitter (Verification not provided in Production Test)				50	ps	
V_{xtalDC}	DC-Voltage Oscillator			2.5		V	
$t_{Startup}$	Oscillator Startup Time at VDD Slew-rate of 1 V/1 µs	XTAL_IN, XTAL_OUT		0.4	2	ms	
V_{ACLKAC}	Audio Clock Output AC Voltage	AUD_CL_OUT	1.2	1.8		V_{pp}	load = 40 pF
V_{ACLKDC}	Audio Clock Output DC Voltage		0.4		0.6	V_{SUP3}	I_{max} = 0.2 mA
r_{outHF_ACL}	HF Output Resistance			140		Ω	

4.6.3.2. Digital Inputs, Digital Outputs

Symbol	Parameter	Pin Name	Limit Values			Unit	Test Conditions
			Min.	Typ.	Max.		
Digital Input Levels							
V_{DIGIL}	Digital Input Low Voltage	STANDBYQ D_CTR_I/O_0/1			0.2	V_{SUP2}	
V_{DIGIH}	Digital Input High Voltage		0.5			V_{SUP2}	
Z_{DIGI}	Input Impedance				5	pF	
I_{DLEAK}	Digital Input Leakage Current		–1		1	µA	0 V < U_{INPUT}< DVSUP D_CTR_I/O_0/1: tri-state
V_{DIGIL}	Digital Input Low Voltage	ADR_SEL			0.2	V_{SUP2}	
V_{DIGIH}	Digital Input High Voltage		0.8			V_{SUP2}	
I_{ADRSEL}	Input Current Address Select Pin		–500	–220		µA	U_{ADR_SEL}= DVSS
				220	500	µA	U_{ADR_SEL}= DVSUP
Digital Output Levels							
V_{DCTROL}	Digital Output Low Voltage	D_CTR_I/O_0 D_CTR_I/O_1			0.4	V	IDDCTR = 1 mA
V_{DCTROH}	Digital Output High Voltage		V_{SUP2} –0.3			V	IDDCTR = –1 mA

4.6.3.3. Reset Input and Power-Up

Symbol	Parameter	Pin Name	Limit Values			Unit	Test Conditions
			Min.	Typ.	Max.		
RESETQ Input Levels							
V_{RHL}	Reset High-Low Transition Voltage	RESETQ	0.3		0.4	V_{SUP2}	
V_{RLH}	Reset Low-High Transition Voltage			0.45		V_{SUP2}	
Z_{RES}	Input Impedance				5	pF	
I_{RES}	Input Pin Leakage Current				20	µA	0 V < U_{INPUT}< DVSUP

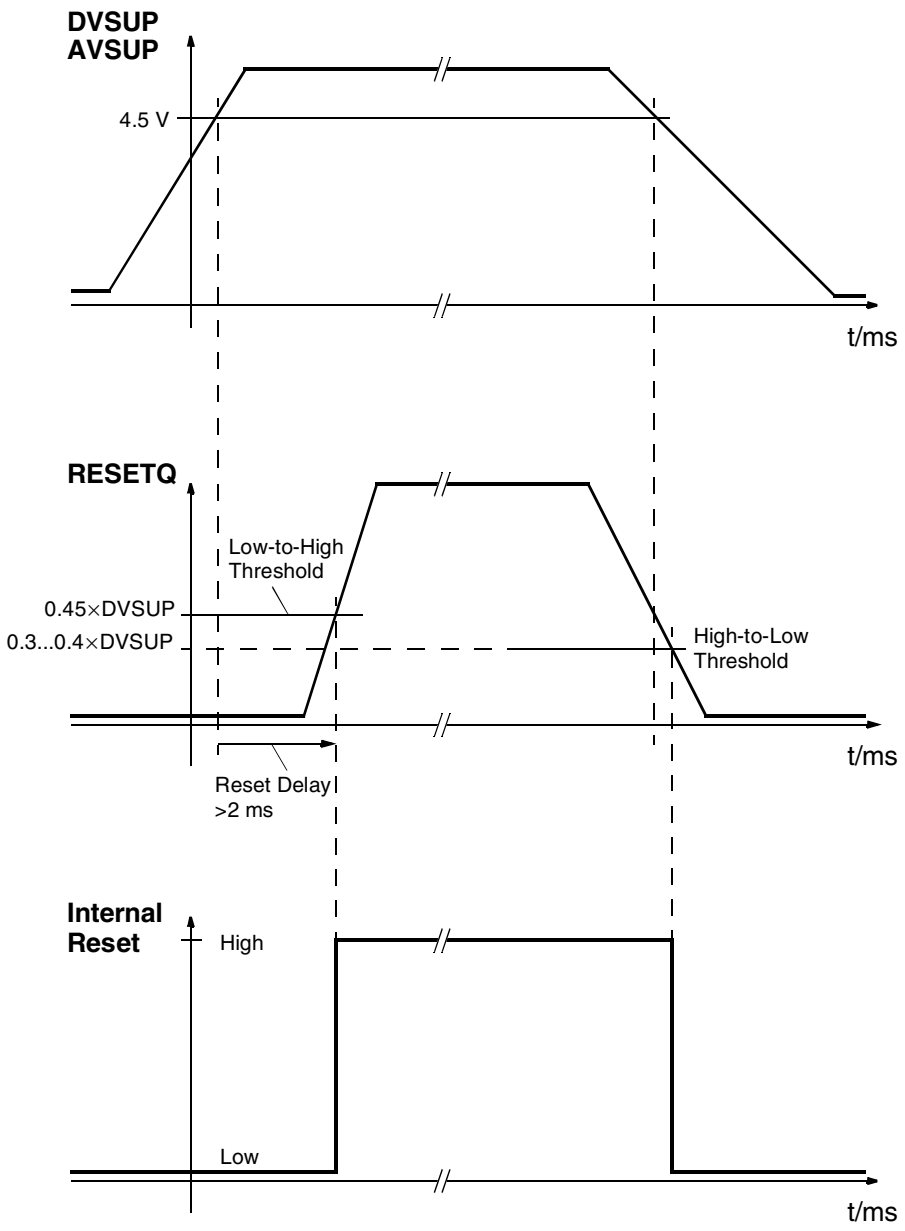

Note: The reset should not reach high level before the oscillator has started. This requires a reset delay of >2 ms

0.45 x DVSUP means 2.25 Volt with DVSUP = 5.0 V

Fig. 4–22: Power-up sequence

4.6.3.4. I²C-Bus Characteristics

Symbol	Parameter	Pin Name	Limit Values			Unit	Test Conditions
			Min.	Typ.	Max.		
V_{I2CIL}	I²C-Bus Input Low Voltage	I2C_CL, I2C_DA			0.3	V_{SUP2}	
V_{I2CIH}	I²C-Bus Input High Voltage		0.6			V_{SUP2}	
t_{I2C1}	I²C Start Condition Setup Time		120			ns	
t_{I2C2}	I²C Stop Condition Setup Time		120			ns	
t_{I2C5}	I²C-Data Setup Time before Rising Edge of Clock		55			ns	
t_{I2C6}	I²C-Data Hold Time after Falling Edge of Clock		55			ns	
t_{I2C3}	I²C-Clock Low Pulse Time	I2C_CL	500			ns	
t_{I2C4}	I²C-Clock High Pulse Time		500			ns	
f_{I2C}	I²C-BUS Frequency				1.0	MHz	
V_{I2COL}	I²C-Data Output Low Voltage	I2C_CL, I2C_DA			0.4	V	I_{I2COL} = 3 mA
I_{I2COH}	I²C-Data Output High Leakage Current				1.0	µA	V_{I2COH} = 5 V
t_{I2COL1}	I²C-Data Output Hold Time after Falling Edge of Clock		15			ns	
t_{I2COL2}	I²C-Data Output Setup Time before Rising Edge of Clock		100			ns	f_{I2C} = 1 MHz

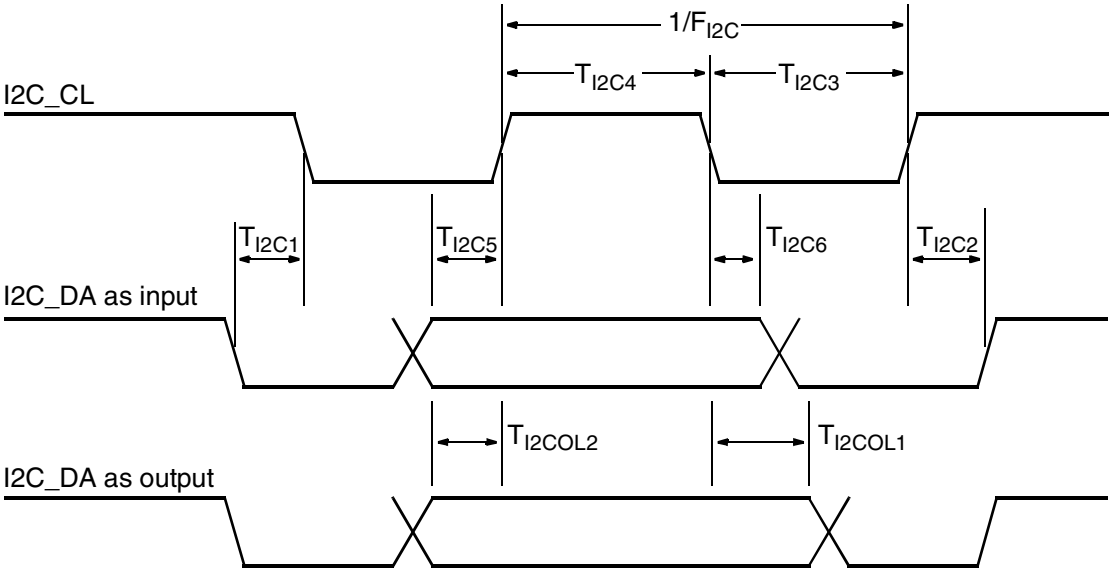

Fig. 4–23: I²C bus timing diagram

4.6.3.5. I²S-Bus Characteristics

Symbol	Parameter	Pin Name	Limit Values			Unit	Test Conditions
			Min.	Typ.	Max.		
V_{I2SIL}	Input Low Voltage	I2S_CL I2S_WS I2S_DA_IN1/2			0.2	V_{SUP2}	
V_{I2SIH}	Input High Voltage		0.5			V_{SUP2}	
Z_{I2SI}	Input Impedance				5	pF	
$I_{LEAKI2S}$	Input Leakage Current		–1		1	µA	0 V < U_{INPUT}< DVSUP
V_{I2SOL}	I²S Output Low Voltage	I2S_CL I2S_WS I2S_DA_OUT			0.4	V	I_{I2SOL} = 1 mA
V_{I2SOH}	I²S Output High Voltage		V_{SUP2} – 0.3			V	I_{I2SOH} = –1 mA
f_{I2SOWS}	I²S-Word Strobe Output Frequency	I2S_WS		32.0		kHz	
f_{I2SOCL}	I²S-Clock Output Frequency	I2S_CL		1.024 2.048		MHz MHz	I2S_CONFIG[0] = 0 I2S_CONFIG[0] = 1
$R_{I2S10/I2S20}$	I²S-Clock Output High/Low-Ratio		0.9	1.0	1.1		
t_{s_I2S}	I²S Input Setup Time before Rising Edge of Clock	I2S_CL I2S_DA_IN1/2	12			ns	for details see Fig. 4–24 “I2S bus timing diagram”
t_{h_I2S}	I²S Input Hold Time after Rising Edge of Clock		40			ns	
t_{d_I2S}	I²S Output Delay Time after Falling Edge of Clock	I2S_CL I2S_WS I2S_DA_OUT			28	ns	C_L = 30 pF
f_{I2SWS}	I²S-Word Strobe Input Frequency	I2S_WS		32.0		kHz	
f_{I2SCL}	I²S-Clock Input Frequency	I2S_CL		1.024	2.048	MHz	
R_{I2SCL}	I²S-Clock Input Ratio		0.9		1.1		

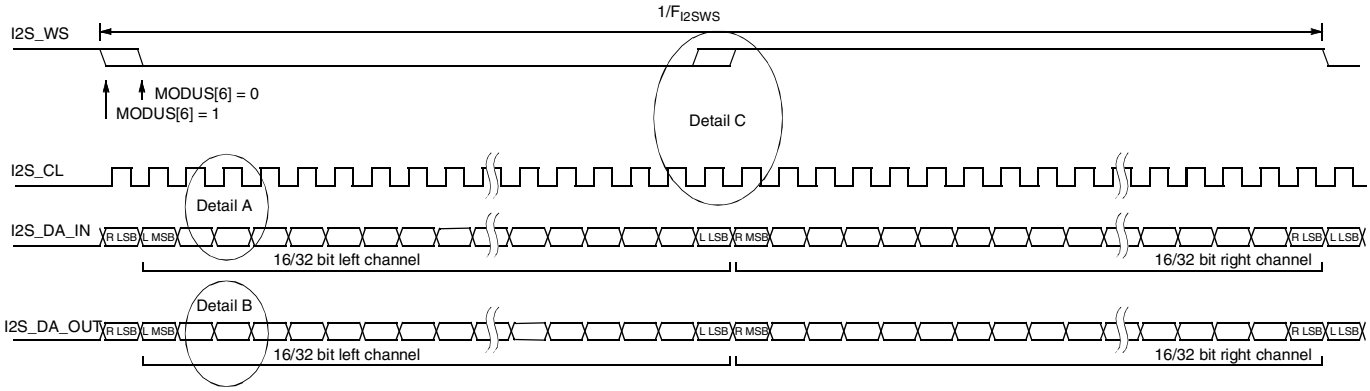

Data: MSB first, I²S master

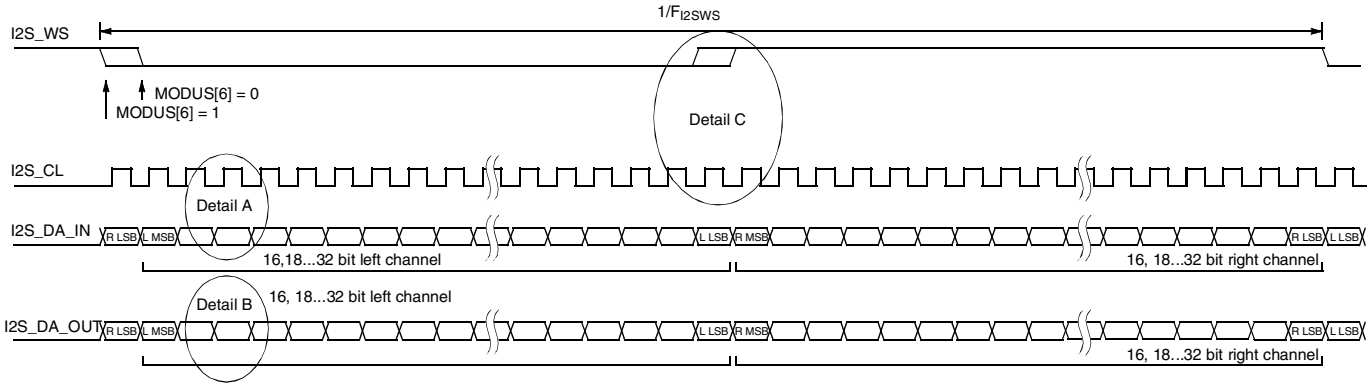

Data: MSB first, I²S slave

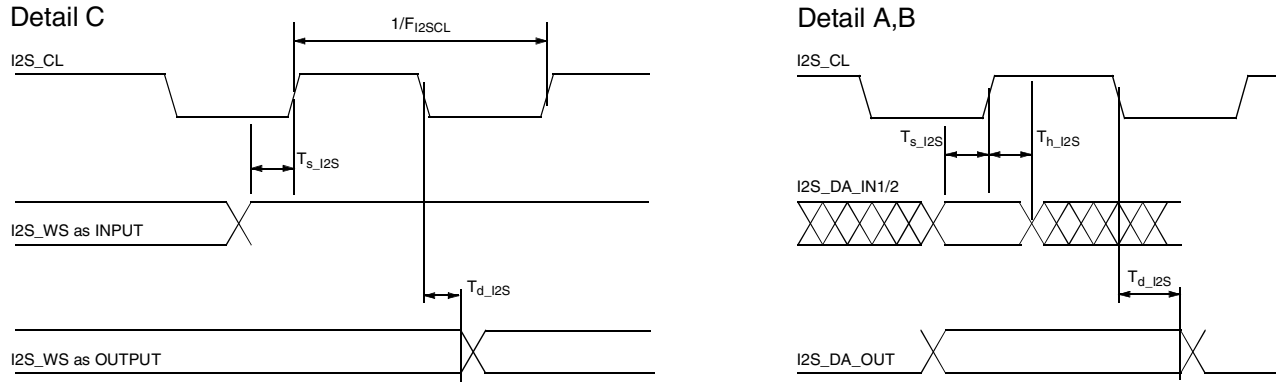

Fig. 4–24: I²S bus timing diagram

4.6.3.6. Analog Baseband Inputs and Outputs, AGNDC

Symbol	Parameter	Pin Name	Limit Values			Unit	Test Conditions
			Min.	Typ.	Max.		
Analog Ground							
V_{AGNDC0}	AGNDC Open Circuit Voltage (AHVSUP = 8 V)	AGNDC		3.77		V	$R_{load} \geq 10\ M\Omega$
	AGNDC Open Circuit Voltage (AHVSUP = 5 V)			2.51		V	
R_{outAGN}	AGNDC Output Resistance (AHVSUP = 8 V)		70	125	180	kΩ	$3\ V \leq V_{AGNDC} \leq 4\ V$
	AGNDC Output Resistance (AHVSUP = 5 V)		47	83	120	kΩ	
Analog Input Resistance							
R_{inSC}	SCART Input Resistance from T_A = 0 to 70 °C	SCn_IN_s[1)]	25	40	58	kΩ	f_{signal} = 1 kHz, I = 0.05 mA
R_{inMONO}	MONO Input Resistance from T_A = 0 to 70 °C	MONO_IN	15	24	35	kΩ	f_{signal} = 1 kHz, I = 0.1 mA
Audio Analog-to-Digital-Converter							
V_{AICL}	Analog Input Clipping Level for Analog-to-Digital-Conversion (AHVSUP = 8 V)	SCn_IN_s,[1)] MONO_IN	2.00		2.25	V_{RMS}	f_{signal} = 1 kHz
	Analog Input Clipping Level for Analog-to-Digital-Conversion (AHVSUP = 5 V)		1.13		1.51	V_{RMS}	
SCART Outputs							
R_{outSC}	SCART Output Resistance	SCn_OUT_s[1)]	200 200	330	460 500	Ω Ω	f_{signal} = 1 kHz, I = 0.1 mA T_j = 27 °C T_A = 0 to 70 °C
dV_{OUTSC}	Deviation of DC-Level at SCART Output from AGNDC Voltage		−70		+70	mV	
A_{SCtoSC}	Gain from Analog Input to SCART Output	SCn_IN_s,[1)] MONO_IN → SCn_OUT_s[1)]	−1.0		+0.5	dB	f_{signal} = 1 kHz
$f_{rSCtoSC}$	Frequency Response from Analog Input to SCART Output		−0.5		+0.5	dB	with resp. to 1 kHz Bandwidth: 0 to 20000 Hz
V_{outSC}	Signal Level at SCART Output (AHVSUP = 8 V)	SCn_OUT_s[1)]	1.8	1.9	2.0	V_{RMS}	f_{signal} = 1 kHz Volume 0 dB Full Scale input from I^2S
	Signal Level at SCART Output (AHVSUP = 5 V)		1.17	1.27	1.37	V_{RMS}	

[1)] "n" means "1", "2", "3", or "4"; "s" means "L" or "R"

Symbol	Parameter	Pin Name	Limit Values			Unit	Test Conditions
			Min.	Typ.	Max.		
Main, AUX, and CS Outputs							
R_{outMA}	Main/AUX Output Resistance	DACM_r,[1)] DACA_s	2.1 2.1	3.3	4.6 5.0	kΩ kΩ	f_{signal} = 1 kHz, I = 0.1 mA T_j = 27 °C T_A = 0 to 70 °C
$V_{outDCMA}$	DC-Level at Main/AUX-Output DC-Level, not selected CS-Output (AHVSUP = 8 V)		1.80	2.04 61 0	2.28	V mV V	Volume 0 dB Volume –30 dB
	DC-Level at Main/AUX-Output DC-Level, not selected CS-Output (AHVSUP = 5 V)		1.12	1.36 40 0	1.60	V mV V	Volume 0 dB Volume –30 dB
$V_{outMACS}$	Signal Level at Main/AUX-Output (AHVSUP = 8 V)		1.23	1.37	1.51	V_{RMS}	f_{signal} = 1 kHz Volume = 0 dB Full Scale input from I^2S
	Signal Level at Main/AUX-Output (AHVSUP = 5 V)		0.76	0.90	1.04	V_{RMS}	

1) "r" means "L", "R", "C", or "S"; "s" means "L" or "R"

4.6.3.7. Sound IF Inputs

Symbol	Parameter	Pin Name	Limit Values			Unit	Test Conditions
			Min.	Typ.	Max.		
R_{IFIN}	Input Impedance	ANA_IN1+, ANA_IN2+, ANA_IN–	1.5 6.8	2 9.1	2.5 11.4	kΩ kΩ	Gain AGC = 20 dB Gain AGC = 3 dB
$DC_{VREFTOP}$	DC Voltage at VREFTOP	VREFTOP	2.45	2.65	2.75	V	
DC_{ANA_IN}	DC Voltage on IF Inputs	ANA_IN1+, ANA_IN2+, ANA_IN–	1.3	1.5	1.7	V	
$XTALK_{IF}$	Crosstalk Attenuation	ANA_IN1+, ANA_IN2+, ANA_IN–	40			dB	f_{signal} = 1 MHz Input Level = –2 dBr
BW_{IF}	3 dB Bandwidth		10			MHz	
AGC	AGC Step Width			0.85		dB	

4.6.3.8. Power Supply Rejection

Symbol	Parameter	Pin Name	Limit Values			Unit	Test Conditions
			Min.	Typ.	Max.		
PSRR: Rejection of Noise on AHVSUP at 1 kHz							
PSRR	AGNDC	AGNDC		80		dB	
	From Analog Input to I^2S Output	MONO_IN, SCn_IN_s[1)]		70		dB	
	From Analog Input to SCART Output	MONO_IN, SCn_IN_s[1)] SCn_OUT_s[1)]		70		dB	
	From I^2S Input to SCART Output	SCn_OUT_s[1)]		60		dB	
	From I^2S Input to Main or AUX Output	DACM_r,[1)] DACA_s		80		dB	

1) "n" means "1", "2", "3", or "4"; "r" means "L", "R", "C", or "S"; "s" means "L" or "R"

4.6.3.9. Analog Performance

Symbol	Parameter	Pin Name	Limit Values			Unit	Test Conditions
			Min.	Typ.	Max.		
Specifications for AHVSUP = 8 V							
SNR	Dynamic Range and Signal-to-Noise Ratio						
	from Analog Input to I^2S Output	MONO_IN, SCn_IN_s[1)]	88	93		dB	Input Level = –20 dB with resp. to V_{AICL}, f_{sig} = 1 kHz, A-weighted 20 Hz…16 kHz
	from Analog Input to SCART Output	MONO_IN, SCn_IN_s[1)] → SCn_OUT_s[1)]	93	96		dB	Input Level = –20 dB, f_{sig} = 1 kHz, A-weighted 20 Hz…20 kHz
	from I^2S Input to SCART Output	SCn_OUT_s[1)]	88	93		dB	Input Level = –20 dB, f_{sig} = 1 kHz, A-weighted 20 Hz…16 kHz
	from I^2S Input to Main/AUX-Output for Analog Volume at 0 dB for Analog Volume at –30 dB	DACM_r,[1)] DACA_s	 88 81	 93 86		 dB dB	Input Level = –20 dB, f_{sig} = 1 kHz, A-weighted 20 Hz…16 kHz
THD	Total Harmonic Distortion						
	from Analog Input to I^2S Output	MONO_IN, SCn_IN_s[1)]		0.008	0.03	%	Input Level = –3 dBr with resp. to V_{AICL}, f_{sig} = 1 kHz, unweighted 20 Hz…16 kHz
	from Analog Input to SCART Output	MONO_IN, SCn_IN_s → SCn_OUT_s[1)]		0.008	0.03	%	Input Level = –3 dBr, f_{sig} = 1 kHz, unweighted 20 Hz…20 kHz
	from I^2S Input to SCART Output	SCn_OUT_s[1)]		0.008	0.03	%	Input Level = –3 dBr, f_{sig} = 1 kHz, unweighted 20 Hz…16 kHz
	from I^2S Input to Main or AUX Output	DACM_r,[1)] DACA_s		0.008	0.03	%	Input Level = –3 dBr, f_{sig} = 1 kHz, unweighted 20 Hz…16 kHz

[1)] “n” means “1”, “2”, “3”, or “4”; “r” means “L”, “R”, “C”, or “S”; “s” means “L” or “R”

Symbol	Parameter	Pin Name	Limit Values			Unit	Test Conditions
			Min.	Typ.	Max.		
Specifications for AHVSUP = 5 V							
SNR	Dynamic Range and Signal-to-Noise Ratio						
	from Analog Input to I^2S Output	MONO_IN, SCn_IN_s[1)]	85	90		dB	Input Level = –20 dB with resp. to V_{AICL}, f_{sig} = 1 kHz, A-weighted 20 Hz…16 kHz
	from Analog Input to SCART Output	MONO_IN, SCn_IN_s[1)] → SCn_OUT_s[1)]	90	93		dB	Input Level = –20 dB, f_{sig} = 1 kHz, A-weighted 20 Hz…20 kHz
	from I^2S Input to SCART Output	SCn_OUT_s[1)]	85	90		dB	Input Level = –20 dB, f_{sig} = 1 kHz, A-weighted 20 Hz…16 kHz
	from I^2S Input to Main/AUX-Output for Analog Volume at 0 dB for Analog Volume at –30 dB	DACM_r,[1)] DACA_s	 85 78	 90 83		 dB dB	Input Level = –20 dB, f_{sig} = 1 kHz, A-weighted 20 Hz…16 kHz
THD	Total Harmonic Distortion						
	from Analog Input to I^2S Output	MONO_IN, SCn_IN_s[1)]		0.03	0.1	%	Input Level = –3 dBr with resp. to V_{AICL}, f_{sig} = 1 kHz, unweighted 20 Hz…16 kHz
	from Analog Input to SCART Output	MONO_IN, SCn_IN_s → SCn_OUT_s[1)]			0.1	%	Input Level = –3 dBr, f_{sig} = 1 kHz, unweighted 20 Hz…20 kHz
	from I^2S Input to SCART Output	SCn_OUT_s[1)]			0.1	%	Input Level = –3 dBr, f_{sig} = 1 kHz, unweighted 20 Hz…16 kHz
	from I^2S Input to Main or AUX Output	DACA_s, DACM_s[1)]			0.1	%	Input Level = –3 dBr, f_{sig} = 1 kHz, unweighted 20 Hz…16 kHz

[1)] “n” means “1”, “2”, “3”, or “4”; “r” means “L”, “R”, “C”, or “S”; “s” means “L” or “R”

Symbol	Parameter	Pin Name	Limit Values			Unit	Test Conditions
			Min.	Typ.	Max.		
CROSSTALK Specifications							
XTALK	Crosstalk Attenuation						Input Level = –3 dB, f_{sig} = 1 kHz, unused analog inputs connected to ground by Z < 1 kΩ
	between left and right channel within SCART Input/Output pair (L→R, R→L) SCn_IN → SCn_OUT[1)] SC1_IN or SC2_IN → I²S Output SC3_IN → I²S Output I²S Input → SCn_OUT[1)]		 80 80 80 80			 dB dB dB dB	unweighted 20 Hz...20 kHz
	between left and right channel within Main or AUX Output pair I²S Input → DACM I²S Input → DACA		 75			 dB	unweighted 20 Hz...16 kHz
	between SCART Input/Output pairs D = disturbing program O = observed program D: MONO/SCn_IN → SCn_OUT O: MONO/SCn_IN → SCn_OUT[1)] D: MONO/SCn_IN → SCn_OUT or unsel. O: MONO/SCn_IN → I²S Output D: MONO/SCn_IN → SCn_OUT O: I²S Input → SCn_OUT[1)] D: MONO/SCn_IN → unselected O: I²S Input → SC1_OUT[1)]		 100 95 100 100			 dB dB dB dB	unweighted 20 Hz...20 kHz same signal source on left and right disturbing channel, effect on each observed output channel
	Crosstalk between Main and AUX Output pairs I²S Input → DACM I²S Input → DACA		 90			 dB	unweighted 20 Hz...16 kHz same signal source on left and right disturbing channel, effect on each observed output channel
XTALK	Crosstalk from Main or AUX Output to SCART Output and vice versa D = disturbing program O = observed program D: MONO/SCn_IN/DSP → SCn_OUT O: I²S Input → DACM O: I²S Input → DACA D: MONO/SCn_IN/DSP → SCn_OUT O: I²S Input → DACM O: I²S Input → DACA D: I²S Input → DACM D: I²S Input → DACA O: MONO/SCn_IN → SCn_OUT[1)] D: I²S Input → DACM D: I²S Input → DACA O: I²S Input → SCn_OUT[1)]		 80 85 95 95			 dB dB dB dB	unweighted 20 Hz...20 kHz same signal source on left and right disturbing channel, effect on each observed output channel SCART output load resistance 10 kΩ SCART output load resistance 30 kΩ

[1)] "n" means "1", "2", "3", or "4"

4.6.3.10.Sound Standard Dependent Characteristics

Symbol	Parameter	Pin Name	Limit Values			Unit	Test Conditions
			Min.	Typ.	Max.		
NICAM Characteristics (MSP Standard Code = 8)							
$dV_{NICAMOUT}$	Tolerance of Output Voltage of NICAM Baseband Signal	DACM_r,[1] DACA_s, SCn_OUT_s	–1.5		+1.5	dB	2.12 kHz, Modulator input level = 0 dBref
S/N_{NICAM}	S/N of NICAM Baseband Signal		72			dB	NICAM: –6 dB, 1 kHz, RMS unweighted 0 to 16 kHz, Vol = 9 dB NIC_Presc = $7F_{hex}$ Output level 1 V_{RMS}
THD_{NICAM}	Total Harmonic Distortion + Noise of NICAM Baseband Signal				0.1	%	2.12 kHz, Modulator input level = 0 dBref
BER_{NICAM}	NICAM: Bit Error Rate				1	10^{-7}	FM+NICAM, norm conditions
fR_{NICAM}	NICAM Frequency Response , 20...15000 Hz		–1.0		+1.0	dB	Modulator input level = –12 dB dBref; RMS
$XTALK_{NICAM}$	NICAM Crosstalk Attenuation (Dual)		80			dB	
SEP_{NICAM}	NICAM Channel Separation (Stereo)		80			dB	
FM Characteristics (MSP Standard Code = 3)							
dV_{FMOUT}	Tolerance of Output Voltage of FM Demodulated Signal	DACM_r,[1] DACA_s, SCn_OUT_s[1]	–1.5		+1.5	dB	1 FM-carrier, 50 µs, 1 kHz, 40 kHz deviation; RMS
S/N_{FM}	S/N of FM Demodulated Signal		73			dB	1 FM-carrier 5.5 MHz, 50 µs, 1 kHz, 40 kHz deviation; RMS, unweighted 0 to 15 kHz (for S/N); full input range, FM-Prescale = 46_{hex}, Vol = 0 dB → Output Level 1 V_{RMS}
THD_{FM}	Total Harmonic Distortion + Noise of FM Demodulated Signal				0.1	%	
fR_{FM}	FM Frequency Response 20...15000 Hz		–1.0		+1.0	dB	1 FM-carrier 5.5 MHz, 50 µs, Modulator input level = –14.6 dBref; RMS
$XTALK_{FM}$	FM Crosstalk Attenuation (Dual)		80			dB	2 FM-carriers 5.5/5.74 MHz, 50 µs, 1 kHz, 40 kHz deviation; Bandpass 1 kHz
SEP_{FM}	FM Channel Separation (Stereo)	DACM_r,[1] DACA_s, SCn_OUT_s	50			dB	2 FM-carriers 5.5/5.74 MHz, 50 µs, 1 kHz, 40 kHz deviation; RMS
AM Characteristics (MSP Standard Code = 9)							
$S/N_{AM(1)}$	S/N of AM Demodulated Signal measurement condition: RMS/Flat	DACM_r,[1] DACA_s, SCn_OUT_s	55			dB	SIF level: 0.1–0.8 V_{pp} AM-carrier 54% at 6.5 MHz Vol = 0 dB, FM/AM prescaler set for output = 0.5 V_{RMS} at Loudspeaker out; Standard Code = 09_{hex} no video/chroma components
$S/N_{AM(2)}$	S/N of AM Demodulated Signal measurement condition: QP/CCIR		45			dB	
THD_{AM}	Total Harmonic Distortion + Noise of AM Demodulated Signal				0.6	%	
fR_{AM}	AM Frequency Response 50...12000 Hz		–2.5		+1.0	dB	

1) “n” means “1” or “2”; “r” means “L”, “R”, “C”, or “S”; “s” means “L” or “R”

Symbol	Parameter	Pin Name	Limit Values			Unit	Test Conditions
			Min.	Typ.	Max.		
BTSC Characteristics (MSP Standard Code = 20_{hex}, 21_{hex})							
S/N_{BTSC}	S/N of BTSC Stereo Signal S/N of BTSC-SAP Signal	DACM_r,[1)] DACA_s, SCn_OUT_s	68 57			dB dB	1 kHz L or R or SAP, 100% modulation, 75 µs deemphasis, RMS unweighted 0 to 15 kHz
THD_{BTSC}	THD+N of BTSC Stereo Signal THD+N of BTSC SAP Signal				0.1 0.5	% %	1 kHz L or R or SAP, 100% modulation, 75 µs EIM[2)], DBX NR, RMS unweighted 0 to 15 kHz
fR_{DBX}	Frequency Response of BTSC Stereo, 50 Hz...12 kHz Frequency Response of BTSC-SAP, 50 Hz...9 kHz		−1.0 −1.0		1.0 1.0	dB dB	L or R or SAP, 1%...66% EIM[2)], DBX NR
fR_{MNR}	Frequency Response of BTSC Stereo, 50 Hz...12 kHz		−2.0		2.0	dB	L or R 5%...66% EIM[2)], MNR
	Frequency Response of BTSC-SAP, 50 Hz...9 kHz		−2.0		2.0	dB	SAP, white noise, 10% Modulation, MNR
$XTALK_{BTSC}$	Stereo → SAP SAP → Stereo		76 80			dB dB	1 kHz L or R or SAP, 100% modulation, 75 µs deemphasis, Bandpass 1 kHz
SEP_{DBX}	Stereo Separation DBX NR 50 Hz...10 kHz 50 Hz...12 kHz		 35 30			 dB dB	L or R 1%...66% EIM[2)], DBX NR
SEP_{MNR}	Stereo Separation MNR		30			dB	L = 300 Hz, R = 3.1 kHz 14% modulation, MNR
FM_{pil}	Pilot deviation threshold Stereo off → on Stereo on → off	ANA_IN1+, ANA_IN2+	 3.2 1.2		 3.5 1.5	 kHz kHz	4.5 MHz carrier modulated with f_h = 15.743 kHz SIF level = 100 mV_{pp} indication: STATUS Bit[6]
f_{Pilot}	Pilot Frequency Range		15.563		15.843	kHz	standard BTSC stereo signal, sound carrier only

1) "n" means "1" or "2"; "r" means "L", "R", "C", or "S"; "s" means "L" or "R"

2) EIM refers to 75-µs Equivalent Input Modulation. It is defined as the audio-signal level which results in a stated percentage modulation, when the DBX encoding process is replaced by a 75-µs preemphasis network.

Symbol	Parameter	Pin Name	Limit Values			Unit	Test Conditions
			Min.	Typ.	Max.		
BTSC Characteristics (MSP Standard Code = 20_{hex}, 21_{hex}) with a minimum IF input signal level of 70 mVpp (measured without any video/chroma signal components)							
S/N_{BTSC}	S/N of BTSC Stereo Signal S/N of BTSC-SAP Signal	DACM_r,[1] DACA_s, SCn_OUT_s	64 55			dB dB	1 kHz L or R or SAP, 100% modulation, 75 µs deemphasis, RMS unweighted 0 to 15
THD_{BTSC}	THD+N of BTSC Stereo Signal THD+N of BTSC SAP Signal				0.15 0.8	% %	1 kHz L or R or SAP, 100% modulation, 75 µs EIM[2], DBX NR, RMS unweighted 0 to 15 kHz
fR_{DBX}	Frequency Response of BTSC Stereo, 50 Hz...12 kHz Frequency Response of BTSC-SAP, 50 Hz...9 kHz		−1.0 −1.0		1.0 1.0	dB dB	L or R or SAP, 1%...66% EIM[2], DBX NR
fR_{MNR}	Frequency Response of BTSC Stereo, 50 Hz...12 kHz		−2.0		2.0	dB	L or R 5%...66% EIM[2], MNR
	Frequency Response of BTSC-SAP, 50 Hz...9 kHz		−2.0		2.0	dB	SAP, white noise, 10% Modulation, MNR
$XTALK_{BTSC}$	Stereo → SAP SAP → Stereo		75 75			dB dB	1 kHz L or R or SAP, 100% modulation, 75 µs deemphasis, Bandpass 1 kHz
SEP_{DBX}	Stereo Separation DBX NR 50 Hz...10 kHz 50 Hz...12 kHz		 35 30			 dB dB	L or R 1%...66% EIM[2], DBX NR
SEP_{MNR}	Stereo Separation MNR		30			dB	L = 300 Hz, R = 3.1 kHz 14% modulation, MNR

1) "n" means "1" or "2"; "r" means "L", "R", "C", or "S"; "s" means "L" or "R"

2) EIM refers to 75-µs Equivalent Input Modulation. It is defined as the audio-signal level which results in a stated percentage modulation, when the DBX encoding process is replaced by a 75-µs preemphasis network.

Symbol	Parameter	Pin Name	Limit Values			Unit	Test Conditions
			Min.	Typ.	Max.		
EIA-J Characteristics (MSP Standard Code = 30_{hex})							
S/N_{EIAJ}	S/N of EIA-J Stereo Signal S/N of EIA-J Sub-Channel	DACM_r,[1] DACA_s, SCn_OUT_s	60 60			dB dB	1 kHz L or R, 100% modulation, 75 µs deemphasis, RMS unweighted 0 to 15 kHz
THD_{EIAJ}	THD+N of EIA-J Stereo Signal THD+N of EIA-J Sub-Channel				0.2 0.3	% %	
fR_{EIAJ}	Frequency Response of EIA-J Stereo, 50 Hz...12 kHz Frequency Response of EIA-J Sub-Channel, 50 Hz...12 kHz		−1.0 −1.0		1.0 1.0	dB dB	100% modulation, 75 µs deemphasis
$XTALK_{EIAJ}$	Main → SUB Sub → MAIN		66 80			dB dB	1 kHz L or R, 100% modulation, 75 µs deemphasis, Bandpass 1 kHz
SEP_{EIAJ}	Stereo Separation 50 Hz...5 kHz 50 Hz...10 kHz		 35 28			 dB dB	EIA-J Stereo Signal, L or R 100% modulation
FM-Radio Characteristics (MSP Standard Code = 40_{hex})							
S/N_{UKW}	S/N of FM-Radio Stereo Signal	DACM_r,[1] DACA_s, SCn_OUT_s	68			dB	1 kHz L or R, 100% modulation, 75 µs deemphasis, RMS unweighted 0 to 15 kHz
THD_{UKW}	THD+N of FM-Radio Stereo Signal				0.1	%	
fR_{UKW}	Frequency Response of FM-Radio Stereo 50 Hz...15 kHz		−1.0		1.0	dB	L or R, 1%...100% modulation, 75 µs deemphasis
SEP_{UKW}	Stereo Separation 50 Hz...15 kHz		45			dB	
f_{Pilot}	Pilot Frequency Range	ANA_IN1+ ANA_IN2+	18.844		19.125	kHz	standard FM radio stereo signal

[1] “n” means “1” or “2”; “r” means “L”, “R”, “C”, or “S”; “s” means “L” or “R”

5. Appendix A: Overview of TV-Sound Standards

5.1. NICAM 728

Table 5–1: Summary of NICAM 728 sound modulation parameters

Specification	I	B/G	L		D/K	
Carrier frequency of digital sound	6.552 MHz	5.85 MHz	5.85 MHz		5.85 MHz	
Transmission rate	728 kbit/s					
Type of modulation	Differentially encoded quadrature phase shift keying (DQPSK)					
Spectrum shaping Roll-off factor	by means of Roll-off filters					
	1.0	0.4	0.4		0.4	
Carrier frequency of analog sound component	6.0 MHz FM mono	5.5 MHz FM mono	6.5 MHz AM mono		6.5 MHz FM mono	
			terrestrial	cable		
Power ratio between vision carrier and analog sound carrier	10 dB	13 dB	10 dB	16 dB	13 dB	
Power ratio between analog and modulated digital sound carrier	10 dB	7 dB	17 dB	11 dB	China/ Hungary	Poland
					12 dB	7 dB

Table 5–2: Summary of NICAM 728 sound coding characteristics

Characteristics	Values
Audio sampling frequency	32 kHz
Number of channels	2
Initial resolution	14 bit/sample
Companding characteristics	near instantaneous, with compression to 10 bits/sample in 32-samples (1 ms) blocks
Coding for compressed samples	2's complement
Preemphasis	CCITT Recommendation J.17 (6.5 dB attenuation at 800 Hz)
Audio overload level	+12 dBm measured at the unity gain frequency of the preemphasis network (2 kHz)

5.2. A2-Systems

Table 5–3: Key parameters for A2 Systems of Standards B/G, D/K, and M

Characteristics	**Sound Carrier FM1**			**Sound Carrier FM2**		
TV-Sound Standard	**B/G**	**D/K**	**M**	**B/G**	**D/K**	**M**
Carrier frequency in MHz	5.5	6.5	4.5	5.7421875	6.2578125 6.7421875 5.7421875	4.724212
Vision/sound power difference	13 dB			20 dB		
Sound bandwidth	40 Hz to 15 kHz					
Preemphasis	50 µs		75 µs	50 µs		75 µs
Frequency deviation (nom/max)	±27/±50 kHz		±17/±25 kHz	±27/±50 kHz		±15/±25 kHz
Transmission Modes						
Mono transmission	mono			mono		
Stereo transmission	(L+R)/2		(L+R)/2	R		(L–R)/2
Dual sound transmission	language A			language B		
Identification of Transmission Mode						
Pilot carrier frequency				54.6875 kHz		55.0699 kHz
Max. deviation portion				±2.5 kHz		
Type of modulation / modulation depth				AM / 50%		
Modulation frequency				mono: unmodulated stereo: 117.5 Hz dual: 274.1 Hz		 149.9 Hz 276.0 Hz

5.3. BTSC-Sound System

Table 5–4: Key parameters for BTSC-Sound Systems

	Aural Carrier	BTSC-MPX-Components				
		(L+R)	Pilot	(L–R)	SAP	Prof. Ch.
Carrier frequency (f_{hNTSC} = 15.734 kHz) (f_{hPAL} = 15.625 kHz)	4.5 MHz	Baseband	f_h	2 f_h	5 f_h	6.5 f_h
Sound bandwidth in kHz		0.05 - 15		0.05 - 15	0.05 - 10	0.05 - 3.4
Preemphasis		75 µs		DBX	DBX	150 µs
Max. deviation to Aural Carrier	73 kHz (total)	25 kHz[1)]	5 kHz	50 kHz[1)]	15 kHz	3 kHz
Max. Freq. Deviation of Subcarrier Modulation Type				AM	10 kHz FM	3 kHz FM
[1)] Sum does not exceed 50 kHz due to interleaving effects						

5.4. Japanese FM Stereo System (EIA-J)

Table 5–5: Key parameters for Japanese FM-Stereo Sound System EIA-J

	Aural Carrier FM	EIA-J-MPX-Components		
		(L+R)	(L–R)	Identification
Carrier frequency (f_h = 15.734 kHz)	4.5 MHz	Baseband	2 f_h	3.5 f_h
Sound bandwidth		0.05 - 15 kHz	0.05 - 15 kHz	–
Preemphasis		75 µs	75 µs	none
Max. deviation portion to Aural Carrier	47 kHz	25 kHz	20 kHz	2 kHz
Max. Freq. Deviation of Subcarrier Modulation Type			10 kHz FM	60% AM
Transmitter-sided delay		20 µs	0 µs	0 µs
Mono transmission		L+R	–	unmodulated
Stereo transmission		L+R	L–R	982.5 Hz
Bilingual transmission		Language A	Language B	922.5 Hz

5.5. FM Satellite Sound

Table 5–6: Key parameters for FM Satellite Sound

Carrier Frequency	Maximum FM Deviation	Sound Mode	Bandwidth	Deemphasis
6.5 MHz	85 kHz	Mono	15 kHz	50 µs
7.02/7.20 MHz	50 kHz	Mono/Stereo/Bilingual	15 kHz	adaptive
7.38/7.56 MHz	50 kHz	Mono/Stereo/Bilingual	15 kHz	adaptive
7.74/7.92 MHz	50 kHz	Mono/Stereo/Bilingual	15 kHz	adaptive

5.6. FM-Stereo Radio

Table 5–7: Key parameters for FM-Stereo Radio Systems

	Aural Carrier	FM-Radio-MPX-Components			
		(L+R)	Pilot	(L–R)	RDS/ARI
Carrier frequency (f_p = 19 kHz)	10.7 MHz	Baseband	f_p	2 f_p	3 f_p
Sound bandwidth in kHz		0.05 - 15		0.05 - 15	
Preemphasis: – USA – Europe		 75 µs 50 µs		 75 µs 50 µs	
Max. deviation to Aural Carrier	75 kHz (100%)	90%[1)]	10%	90%[1)]	5%
[1)] Sum does not exceed 90% due to interleaving effects.					

6. Appendix B: Manual/Compatibility Mode

To adapt the modes of the STANDARD SELECT register to individual requirements and for reasons of **compatibility to the MSP 34x0D,** the MSP 34x2G offers an Manual/Compatibility Mode, which provides sophisticated programming of the MSP 34x2G.

Using the STANDARD SELECT register generally provides a more economic way to program the MSP 34x2G and will result in optimal behavior. **Therefore, it is not recommended to use the Manual/ Compatibility mode.** In those cases, where the MSP 34x0D is to be substituted by the MSP 34x2G, the tips given in Section 6.9. on page 109 have to be obeyed by the controller software.

6.1. Demodulator Write and Read Registers for Manual/Compatibility Mode

Table 6–1: Demodulator Write Registers; Subaddress: 10_{hex}; these registers are not readable!

Demodulator Write Registers	Address (hex)	MSP-Version	Description	Reset Mode	Page
AUTO_FM/AM	00 21	3412, 3452	**1. MODUS[0]=1 (Automatic Sound Select):** Switching Level threshold of Automatic Switching between NICAM and FM/AM in case of bad NICAM reception **2. MODUS[0]=0 (Manual Mode):** Activation and configuration of Automatic Switching between NICAM and FM/AM in case of bad NICAM reception	00 00	97
A2_Threshold	00 22	all	A2 Stereo Identification Threshold	01 90_{hex}	99
CM_Threshold	00 24	all	Carrier-Mute Threshold	00 $2A_{hex}$	99
AD_CV	00 BB	all	SIF-input selection, configuration of AGC, and Carrier-Mute Function	00 00	100
MODE_REG	00 83	3412, 3452	Controlling of MSP-Demodulator and Interface options. As soon as this register is applied, the MSP 34x2G works in the **MSP 34x0D Compatibility Mode.** **Warning: In this mode, BTSC, EIA-J, and FM-Radio are disabled.** Only MSP 34x0D features are available; the use of MODUS and STATUS register is not allowed. The MSP 34x2G is reset to the normal mode by first programming the MODUS register followed by transmitting a valid standard code to the STANDARD SELECTION register.	00 00	101
FIR1 FIR2	00 01 00 05		FIR1-filter coefficients channel 1 (6 · 8 bit) FIR2-filter coefficients channel 2 (6 · 8 bit), + 3 · 8 bit offset (total 72 bit)	00 00	103
DCO1_LO DCO1_HI DCO2_LO DCO2_HI	00 93 00 9B 00 A3 00 AB		Increment channel 1 Low Part Increment channel 1 High Part Increment channel 2 Low Part Increment channel 2 High Part	00 00	103
PLL_CAPS	00 1F		Not of interest for the customer Switchable PLL capacitors to tune open-loop frequency	00 56	106
Note: All registers except AUTO_FM/AM, A2_Threshold and CM_Threshold are initialised during STANDARD SELECTION and are automatically updated when Automatic Sound Select (MODUS[0]=1) is on.					

Table 6–2: Demodulator Read Registers; Subaddress: 11_{hex}; these registers are not writable!

Demodulator Read Registers	Address (hex)	MSP-Version	Description	Page
C_AD_BITS	00 23	3412, 3452	NICAM-Sync bit, NICAM-C-Bits, and three LSBs of additional data bits	105
ADD_BITS	00 38		NICAM: bit [10:3] of additional data bits	105
CIB_BITS	00 3E		NICAM: CIB1 and CIB2 control bits	105
ERROR_RATE	00 57		NICAM error rate, updated with 182 ms	106
PLL_CAPS	02 1F		Not for customer use	106
AGC_GAIN	02 1E		Not for customer use	106

6.2. DSP Write and Read Registers for Manual/Compatibility Mode

Table 6–3: DSP-Write Registers; Subaddress: 12_{hex}, all registers are readable as well

Write Register	Address (hex)	Bits	Operational Modes and Adjustable Range	Reset Mode	Page
Volume SCART1 channel: Ctrl. mode	00 07	[7:0]	[Linear mode / logarithmic mode]	00_{hex}	107
FM Fixed Deemphasis	00 0F	[15:8]	[50 µs, 75 µs, J17, OFF]	50 µs	107
FM Adaptive Deemphasis		[7:0]	[OFF, WP1]	OFF	107
Identification Mode	00 15	[7:0]	[B/G, M]	B/G	108
FM DC Notch	00 17	[7:0]	[ON, OFF]	ON	108
Volume SCART2 channel: Ctrl. mode	00 40	[7:0]	[Linear mode / logarithmic mode]	00_{hex}	107

Table 6–4: DSP Read Registers; Subaddress: 13_{hex}, all registers are not writable

Additional Read Registers	Address (hex)	Bits	Output Range		Page
Stereo detection register for A2 Stereo Systems	00 18	[15:8]	[80_{hex} ... $7F_{hex}$]	8 bit two's complement	108
DC level readout FM1/Ch2-L	00 1B	[15:0]	[8000_{hex} ... $7FFF_{hex}$]	16 bit two's complement	108
DC level readout FM2/Ch1-R	00 1C	[15:0]	[8000_{hex} ... $7FFF_{hex}$]	16 bit two's complement	108

6.3. Manual/Compatibility Mode: Description of Demodulator Write Registers

6.3.1. Automatic Switching between NICAM and Analog Sound

In case of bad NICAM reception or loss of the NICAM-carrier, the MSP 34x2G offers an Automatic Switching (fall back) to the analog sound (FM/AM-Mono), without the necessity of the controller reading and evaluating any parameters. If a proper NICAM signal returns, switching back to this source is performed automatically as well. The feature evaluates the NICAM ERROR_RATE and switches, if necessary, all output channels which are assigned to the NICAM source, to the analog source, and vice versa.

An appropriate hysteresis algorithm avoids oscillating effects (see Fig. 6–1). STATUS[9] and C_AD_BITS[11] (Addr: 0023 hex) provide information about the actual NICAM-FM/AM-status.

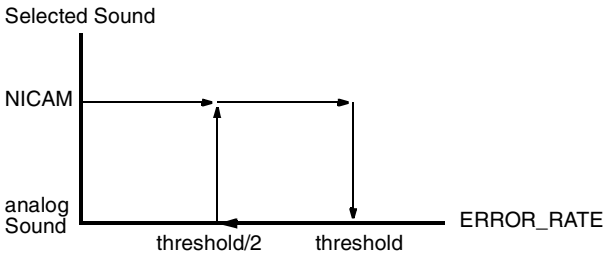

Fig. 6–1: Hysteresis for Automatic Switching

6.3.1.1. Function in Automatic Sound Select Mode

The Automatic Sound Select feature (MODUS[0]=1) includes the procedure mentioned above. By default, the internal ERROR_RATE threshold is set to 700_{dec}. i.e. :

– NICAM → analog Sound if ERROR_RATE > 700

– analog Sound → NICAM if ERROR_RATE < 700/2

The ERROR_RATE value of 700 corresponds to a BER of approximately $5.46*10^{-3}$/s.

Individual configuration of the threshold can be done using Table 6–5. It is recommended to use the internal setting used by the standard selection.

The optimum NICAM sound can be assigned to the MSP output channels by selecting one of the “Stereo or A/B”, “Stereo or A”, or “Stereo or B” source channels.

6.3.1.2. Function in Manual Mode

If the manual mode (MODUS[0]=0) is required, the activation and configuration of the Automatic Switching feature has to be done as described in Table 6–6. Note, that the channel matrix of the corresponding output channels must be set according to the NICAM mode and need not to be changed in the FM/AM-fallback case.

Example:
Required threshold = 500: bits [10:1]=00 1111 1010

Table 6–5: Coding of Automatic NICAM/Analog Sound Switching; **Automatic Sound Select is on (MODUS[0] = 1)**

Mode	Description	AUTO_FM [11:0] Addr. = 00 21_{hex}	ERROR_RATE-Threshold/dec	Source Select: Input at NICAM Path[1)]
1 Default	Automatic Switching with **internal** threshold	bit[11:0] = 0	700	NICAM or FM/AM, depending on ERROR_RATE
2	Automatic Switching with **external** threshold (Customizing of Automatic Sound Select)	bit[11] = 0 bit[10:1] = 25...1000 = threshold/2 bit[0] = 1	set by customer; recommended range: 50...2000	
3	Forced Analog Mono	bit [11] = 1 bit [10:1] = ignored bit [0] = 1		always FM/AM

1) The NICAM path may be assigned to “Stereo or A/B”, “Stereo or A”, or “Stereo or B” source channels (see Table 2–2 on page 14).

Table 6–6: Coding of Automatic NICAM/Analog Sound Switching;
Automatic Sound Select is off (MODUS[0] = 0)

Mode	Description	AUTO_FM [11:0] Addr. = 00 21_{hex}	ERROR_RATE-Threshold/dec	Source Select: Input at NICAM Path
0 reset status	Forced NICAM (Automatic Switching disabled)	bit[11] = 0 bit[10:1] = 0 bit[0] = 0	none	always NICAM; Mute in case of no NICAM available
1	Automatic Switching with **internal** threshold (Default, if Automatic Sound Select is on)	bit[11] = 0 bit[10:1] = 0 bit[0] = 1	700	NICAM or FM/AM, depending on ERROR_RATE
2	Automatic Switching with **external** threshold (Customizing of Automatic Sound Select)	bit[11] = 0 bit[10:1] = 25...1000 = threshold/2 bit[0] = 1	set by customer; recommended range: 50...2000	
3	Forced Analog Mono (Automatic Switching disabled)	bit[11] = 1 bit[10:1] = 0 bit[0] = 1	none	always FM/AM

6.3.2. A2 Threshold

The threshold between Stereo/Bilingual and Mono Identification for the A2 Standard has been made programmable according to the user's preferences. An internal hysteresis ensures robustness and stability.

Table 6–7: Write Register on I^2C Subaddress 10_{hex} : A2 Threshold

Register Address	Function	Name
THRESHOLDS		
00 22_{hex} (write)	**A2 THRESHOLD Register** Defines threshold of all A2 and EIA_J standards for Stereo and Bilingual detection bit[15:0] $07F0_{hex}$ force Mono Identification ... 0190_{hex} default setting after reset ... $00A0_{hex}$ minimum Threshold for stable detection recommended range : $00A0_{hex}$...$03C0_{hex}$	A2_THRESH

6.3.3. Carrier-Mute Threshold

The Carrier-Mute threshold has been made programmable according to the user's preferences. An internal hysteresis ensures stable behavior.

Table 6–8: Write Register on I^2C Subaddress 10_{hex} : Carrier-Mute Threshold

Register Address	Function	Name
THRESHOLDS		
00 24_{hex} (write)	**Carrier-Mute THRESHOLD Register** Defines threshold for the carrier mute feature bit[15:0] 0000_{hex} Carrier-Mute always ON (both channels muted) ... $002A_{hex}$ default setting after reset ... $07FF_{hex}$ Carrier-Mute always OFF (both channels forced on) recommended range : 0014_{hex}...0050_{hex}	CM_THRESH

6.3.4. Register AD_CV

The use of this register is no longer recommended. Use it only in cases where compatibility to the MSP 34x0D is required. Using the STANDARD SELECTION register together with the MODUS register provides a more economic way to program the MSP 34x2G.

Table 6–9: AD_CV Register; reset status: all bits are “0”

AD_CV (00 BB_{hex})			**Automatic setting by STANDARD SELECT Register**	
Bit	**Function**	**Settings**	**2-8, 0A-60$_{hex}$**	**9**
[0]	not used	must be set to 0	0	0
[1–6]	Reference level in case of Automatic Gain Control = on (see Table 6–10). Constant gain factor when Automatic Gain Control = off (see Table 6–11).		101000	100011
[7]	Determination of Automatic Gain or Constant Gain	0 = constant gain 1 = automatic gain	1	1
[8]	Selection of Sound IF source (identical to MODUS[8])	0 = ANA_IN1+ 1 = ANA_IN2+	X	X
[9]	MSP-Carrier-Mute Feature	0 = off: no mute 1 = on: mute as described in section 2.2.2.	1	1
[10–15]	not used	must be set to 0	0	0
X : not affected while choosing the TV sound standard by means of the STANDARD SELECT Register				

Note: This register is initialized during STANDARD SELECTION and is automatically updated when Automatic Sound Select (MODUS[0]=1) is on.

Table 6–10: Reference Values for Active AGC (AD_CV[7] = 1)

Application	**Input Signal Contains**	**AD_CV [6:1] Ref. Value**	**AD_CV [6:1] in integer**	**Range of Input Signal at pin ANA_IN1+ and ANA_IN2+**
Terrestrial TV				
– FM Standards	1 or 2 FM Carriers	101000	40	0.10 – 3 V_{pp} [1)]
– NICAM/FM	1 FM and 1 NICAM Carrier	101000	40	0.10 – 3 V_{pp} [1)]
– NICAM/AM	1 AM and 1 NICAM Carrier	100011	35	0.10 – 1.4 V_{pp} (recommended: 0.10 – 0.8 V_{pp})
– NICAM only	1 NICAM Carrier only	010100	20	0.05 – 1.0 V_{pp}
SAT	1 or more FM Carriers	100011	35	0.10 – 3 V_{pp} [1)]
ADR	FM and ADR carriers	see DRP 3510A data sheet		

[1)] For signals above 1.4 V_{pp}, the minimum gain of 3 dB is switched, and overflow of the A/D converter may result. Due to the robustness of the internal processing, the IC works up to and even more than 3 V_{pp}, if norm conditions of FM/NICAM or FM1/FM2 ratio are supposed. In this overflow case, a loss of FM-S/N ratio of about 10 dB may appear.

Table 6–11: AD_CV parameters for Constant Input Gain (AD_CV[7]=0)

Step	AD_CV [6:1] Constant Gain	Gain	Input Level at pin ANA_IN1+ and ANA_IN2+
0	000000	3.00 dB	maximum input level: 3 V_{pp} (FM) or 1 V_{pp} (NICAM)[1)]
1	000001	3.85 dB	
2	000010	4.70 dB	
3	000011	5.55 dB	
4	000100	6.40 dB	
5	000101	7.25 dB	
6	000110	8.10 dB	
7	000111	8.95 dB	
8	001000	9.80 dB	
9	001001	10.65 dB	
10	001010	11.50 dB	
11	001011	12.35 dB	
12	001100	13.20 dB	
13	001101	14.05 dB	
14	001110	14.90 dB	
15	001111	15.75 dB	
16	010000	16.60 dB	
17	010001	17.45 dB	
18	010010	18.30 dB	
19	010011	19.15 dB	
20	010100	20.00 dB	maximum input level: 0.14 V_{pp}

1) For signals above 1.4 V_{pp}, the minimum gain of 3 dB is switched and overflow of the A/D converter may result. Due to the robustness of the internal processing, the IC works up to and even more than 3 V_{pp}, if norm conditions of FM/NICAM or FM1/FM2 ratio are supposed. In this overflow case, a loss of FM-S/N ratio of about 10 dB may appear.

6.3.5. Register MODE_REG

Note: The use of this register is no longer recommended. It should be used only in cases where software compatibility to the MSP 34x0D is required. Using the STANDARD SELECTION register together with the MODUS register provides a more economic way to program the MSP 34x2G.

As soon as this register is applied, the MSP 34x2G works in the **MSP 34x0D Manual/Compatibility Mode**. In this mode, **BTSC, EIA-J, and FM-Radio are disabled**. Only MSP 34x0D features are available; the use of MODUS and STATUS register is not allowed. The MSP 34x2G is reset to the normal mode by first programming the MODUS register, followed by transmitting a valid standard code to the STANDARD SELECTION register.

The register ‘MODE_REG’ contains the control bits determining the operation mode of the MSP 34x2G in the MSP 34x0D Manual/Compatibility Mode; Table 6–12 explains all bit positions.

Table 6–12: Control word ‘MODE_REG’; reset status: all bits are “0”

MODE_REG 00 83_{hex}				Automatic setting by STANDARD SELECT Register		
Bit	**Function**	**Comment**	**Definition**	**2 - 5**	**8, A, B**	**9**
[0]	not used		0 : must be used	0	0	0
[1]	DCTR_TRI	Digital control out 0/1 tri-state	0 : active 1 : tri-state	X	X	X
[2]	I2S_TRI	I^2S outputs tri-state (I2S_CL, I2S_WS, I2S_DA_OUT)	0 : active 1 : tri-state	X	X	X
[3]	I^2S Mode[1)]	Master/Slave mode of the I^2S bus	0 : Master 1 : Slave	X	X	X
[4]	I2S_WS Mode	WS due to the Sony or Philips-Format	0 : Sony 1 : Philips	X	X	X
[5]	Audio_CL_OUT	Switch Audio_Clock_Output to tri-state	0 : on 1 : tri-state	X	X	X
[6]	NICAM[1)]	Mode of MSP-Ch1	0 : FM 1 : Nicam	0	1	1
[7]	not used		0 : must be used	0	0	0
[8]	FM AM	Mode of MSP-Ch2	0 : FM 1 : AM	0	0	1
[9]	HDEV	High Deviation Mode (channel matrix must be sound A)	0 : normal 1 : high deviation mode	0	0	0
[11:10]	not used		0 : must be used	0	0	0
[12]	MSP-Ch1 Gain	see also Table 6–14	0 : Gain = 6 dB 1 : Gain = 0 dB	0	0	0
[13]	FIR1-Filter Coeff. Set	see also Table 6–14	0 : use FIR1 1 : use FIR2	1	0	0
[14]	ADR	Mode of MSP-Ch1/ ADR-Interface	0 : normal mode/tri-state 1 : ADR-mode/active	0	0	0
[15]	AM-Gain	Gain for AM Demodulation	0 : 0 dB (default. of MSPB) 1 :12 dB (recommended)	1	1	1
[1)] NICAM and I^2S-Slave mode are not allowed simultaneously				X: not affected by STANDARD SELECT Register		

Table 6–13: Loading sequence for FIR-coefficients

FIR1 00 01_{hex} (MSP-Ch1: NICAM/FM2)			
No.	**Symbol Name**	**Bits**	**Value**
1	NICAM/FM2_Coeff. (5)	8	see Table 6–14
2	NICAM/FM2_Coeff. (4)	8	
3	NICAM/FM2_Coeff. (3)	8	
4	NICAM/FM2_Coeff. (2)	8	
5	NICAM/FM2_Coeff. (1)	8	
6	NICAM/FM2_Coeff. (0)	8	
FIR2 00 05_{hex} (MSP-Ch2: FM1/AM)			
No.	**Symbol Name**	**Bits**	**Value**
1	IMREG1	8	04_{hex}
2	IMREG1/ IMREG2	8	40_{hex}
3	IMREG2	8	00_{hex}
4	FM/AM_Coef (5)	8	see Table 6–14
5	FM/AM_Coef (4)	8	
6	FM/AM_Coef (3)	8	
7	FM/AM_Coef (2)	8	
8	FM/AM_Coef (1)	8	
9	FM/AM_Coef (0)	8	

6.3.6. FIR-Parameter, Registers FIR1 and FIR2

Note: The use of this register is no longer recommended. It should be used only in cases where software compatibility to the MSP 34x0D is required. Using the STANDARD SELECTION register together with the MODUS register provides a more economic way to program the MSP 34x2G.

Data-shaping and/or FM/AM bandwidth limitation is performed by a pair of linear phase Finite Impulse Response filters (FIR-filter). The filter coefficients are programmable and are either configured automatically by the STANDARD SELECT register or written manually by the control processor via the control bus. Two not necessarily different sets of coefficients are required: one for MSP-Ch1 (NICAM or FM2) and one for MSP-Ch2 (FM1 = FM-mono). In Table 6–14 several coefficient sets are proposed.

To load the FIR-filters, the following data values are to be transferred **8 bits at a time embedded LSB-bound in a 16-bit word**.

The loading sequences must be obeyed. To change a coefficient set, the complete block FIR1 or FIR2 must be transmitted.

Note: For compatibility with MSP 3410B, IMREG1 and IMREG2 have to be transmitted. The value for IMREG1 and IMREG2 is 004. Due to the partitioning to 8-bit units, the values 04_{hex}, 40_{hex}, and 00_{hex} arise.

6.3.7. DCO-Registers

Note: The use of this register is no longer recommended. It should be used only in cases where software-compatibility to the MSP 34x0D is required. Using the STANDARD SELECTION register together with the MODUS register provides a more economic way to program the MSP 34x2G.

When selecting a TV-sound standard by means of the STANDARD SELECT register, all frequency tuning is performed automatically.

If manual setting of the tuning frequency is required, a set of 24-bit registers determining the mixing frequencies of the quadrature mixers can be written manually into the IC. In Table 6–15, some examples of DCO registers are listed. It is necessary to divide them up into low part and high part. The formula for the calculation of the registers for any chosen IF frequency is as follows:

$$INCR_{dec} = int(f/fs \cdot 2^{24})$$

with: int = integer function
f = IF frequency in MHz
f_S = sampling frequency (18.432 MHz)

Conversion of INCR into hex-format and separation of the 12-bit low and high parts lead to the required register values (DCO1_HI or _LO for MSP-Ch1, DCO2_HI or LO for MSP-Ch2).

Table 6–14: 8-bit FIR-coefficients (decimal integer); reset status: all coefficients are “0”

Coefficients for FIR1 00 01_{hex} and FIR2 00 05_{hex}														
	Terrestrial TV Standards							FM - Satellite FIR filter corresponds to a band-pass with a band-width of B = 130 to 500 kHz 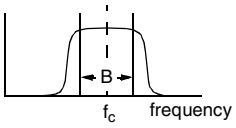						
	B/G-, D/K-NICAM-FM		I-NICAM-FM		L-NICAM-AM		B/G-, D/K-, M-Dual FM	130 kHz	180 kHz	200 kHz	280 kHz	380 kHz	500 kHz	Auto-search
Coef(i)	**FIR1**	**FIR2**	**FIR1**	**FIR2**	**FIR1**	**FIR2**	**FIR2**	**FIR2**	**FIR2**	**FIR2**	**FIR2**	**FIR2**	**FIR2**	**FIR2**
0	–2	3	2	3	–2	–4	3	73	9	3	–8	–1	–1	–1
1	–8	18	4	18	–8	–12	18	53	18	18	–8	–9	–1	–1
2	–10	27	–6	27	–10	–9	27	64	28	27	4	–16	–8	–8
3	10	48	–4	48	10	23	48	119	47	48	36	5	2	2
4	50	66	40	66	50	79	66	101	55	66	78	65	59	59
5	86	72	94	72	86	126	72	127	64	72	107	123	126	126
Mode-REG[12]	0		0		0		0	1	1	1	1	1	1	0
Mode-REG[13]	0		0		0		1	1	1	1	1	1	1	0
For compatibility, except for the FIR2-AM and the Autosearch-sets, the FIR-filter programming as used for the MSP 3410B is also possible.														
ADR coefficients are listed in the DRP data sheet.														

Table 6–15: DCO registers for the MSP 34x2G; reset status: DCO_HI/LO = “0000”

DCO1_LO 00 93_{hex}, DCO1_HI 00 $9B_{hex}$; DCO2_LO 00 $A3_{hex}$, DCO2_HI 00 AB_{hex}					
Freq. MHz	**DCO_HI/hex**	**DCO_LO/hex**	**Freq. MHz**	**DCO_HI/hex**	**DCO_LO/hex**
4.5	03E8	000			
5.04 5.5 5.58 5.7421875	0460 04C6 04D8 04FC	0000 038E 0000 00AA	5.76 5.85 5.94	0500 0514 0528	0000 0000 0000
6.0 6.2 6.5 6.552	0535 0561 05A4 05B0	0555 0C71 071C 0000	6.6 6.65 6.8	05BA 05C5 05E7	0AAA 0C71 01C7
7.02	0618	0000	7.2	0640	0000
7.38	0668	0000	7.56	0690	0000

6.4. Manual/Compatibility Mode: Description of Demodulator Read Registers

Note: The use of these register is no longer recommended. It should be used only in cases where software compatibility to the MSP 34x0D is required. Using the STANDARD SELECTION register together with the STATUS register provides a more economic way to program the MSP 34x2G and to retrieve information from the IC.

All registers except C_AD_BITs are 8 bits wide. They can be read out of the RAM of the MSP 34x2G if the MSP 34x0D Manual/Compatibility Mode is required.

All transmissions take place in 16-bit words. The valid 8-bit data are the 8 LSBs of the received data word.

If the Automatic Sound Select feature is not used, the NICAM or FM-identification parameters must be read and evaluated by the controller in order to enable appropriate switching of the channel select matrix of the baseband processing part. The FM-identification registers are described in section 6.6.1. To handle the NICAM-sound and to observe the NICAM-quality, at least the registers C_AD_BITS and ERROR_RATE must be read and evaluated by the controller. Additional data bits and CIB bits, if supplied by the NICAM transmitter, can be obtained by reading the registers ADD_BITS and CIB_BITS.

6.4.1. NICAM Mode Control/Additional Data Bits Register

NICAM operation mode control bits and A[2:0] of the additional data bits.

Format:

MSB				C_AD_BITS 00 23_{hex}					LSB
11	...	7	6	5	4	3	2	1	0
Auto _FM	...	A[2]	A[1]	A[0]	C4	C3	C2	C1	S

Important: “S” = Bit[0] indicates correct NICAM-synchronization (S = 1). If S = 0, the MSP 3411/3451G has not yet synchronized correctly to frame and sequence, or has lost synchronization. The remaining read registers are therefore not valid. The MSP mutes the NICAM output automatically and tries to synchronize again as long as MODE_REG[6] is set.

The operation mode is coded by C4-C1 as shown in Table 6–16.

Table 6–16: NICAM operation modes as defined by the EBU NICAM 728 specification

C4	C3	C2	C1	Operation Mode
0	0	0	0	Stereo sound (NICAMA/B), independent mono sound (FM1)
0	0	0	1	Two independent mono signals (NICAMA, FM1)
0	0	1	0	Three independent mono channels (NICAMA, NICAMB, FM1)
0	0	1	1	Data transmission only; no audio
1	0	0	0	Stereo sound (NICAMA/B), FM1 carries same channel
1	0	0	1	One mono signal (NICAMA). FM1 carries same channel as NICAMA
1	0	1	0	Two independent mono channels (NICAMA, NICAMB). FM1 carries same channel as NICAMA
1	0	1	1	Data transmission only; no audio
x	1	x	x	Unimplemented sound coding option (not yet defined by EBU NICAM 728 specification)
AUTO_FM: monitor bit for the AUTO_FM Status: 0: NICAM source is NICAM 1: NICAM source is FM				

Note: It is no longer necessary to read out and evaluate the C_AD_BITS. All evaluation is performed in the MSP and indicated in the STATUS register.

6.4.2. Additional Data Bits Register

Contains the remaining 8 of the 11 additional data bits. The additional data bits are not yet defined by the NICAM 728 system.

Format:

MSB				ADD_BITS 00 38_{hex}			LSB
7	6	5	4	3	2	1	0
A[10]	A[9]	A[8]	A[7]	A[6]	A[5]	A[4]	A[3]

6.4.3. CIB Bits Register

CIB bits 1 and 2 (see NICAM 728 specifications).

Format:

MSB				CIB_BITS 00 $3E_{hex}$			LSB
7	6	5	4	3	2	1	0
x	x	x	x	x	x	CIB1	CIB2

6.4.4. NICAM Error Rate Register

ERROR_RATE	00 57_{hex}
Error free	0000_{hex}
maximum error rate	$07FF_{hex}$

Average error rate of the NICAM reception in a time interval of 182 ms, which should be close to 0. The initial and maximum value of ERROR_RATE is 2047. This value is also active if the NICAM bit of MODE_REG is not set. Since the value is achieved by filtering, a certain transition time (approx. 0.5 sec) is unavoidable. Acceptable audio may have error rates up to a value of 700 int. Individual evaluation of this value by the controller and an appropriate threshold may define the fallback mode from NICAM to FM/AM-Mono in case of poor NICAM reception.

The bit error rate per second (BER) can be calculated by means of the following formula:

BER = ERROR_RATE * $12.3*10^{-6}$ /s

6.4.5. PLL_CAPS Readback Register

It is possible to read out the actual setting of the PLL_CAPS. In standard applications, this register is not of interest for the customer.

PLL_CAPS	02 $1F_{hex}$ L	
minimum frequency	1111 1111	FF_{hex}
nominal frequency	0101 0110 RESET	56_{hex}
maximum frequency	0000 0000	00_{hex}
PLL_CAPS	**02 $1F_{hex}$ H**	
PLL open	xxxx xxx0	
PLL closed	xxxx xxx1	

6.4.6. AGC_GAIN Readback Register

It is possible to read out the actual setting of AGC_GAIN in Automatic Gain Mode. In standard applications, this register is not of interest for the customer.

AGC_GAIN	02 $1E_{hex}$	
max. amplification (20 dB)	0001 0100	14_{hex}
min. amplification (3 dB)	0000 0000	00_{hex}

6.4.7. Automatic Search Function for FM-Carrier Detection in Satellite Mode

The AM demodulation ability of the MSP 34x2G offers the possibility to calculate the “field strength” of the momentarily selected FM carrier, which can be read out by the controller. In SAT receivers, this feature can be used to make automatic FM carrier search possible.

For this, the MSP has to be switched to AM-mode (MODE_REG[8]), FM-Prescale must be set to $7F_{hex} = +127_{dec}$, and the FM DC notch (see section 6.5.7.) must be switched off. The sound-IF frequency range must now be “scanned” in the MSP-channel 2 by means of the programmable quadrature mixer with an appropriate incremental frequency (i.e. 10 kHz). After each incrementation, a field strength value is available at the quasi-peak detector output (quasi-peak detector source must be set to FM), which must be examined for relative maxima by the controller. This results in either continuing search or switching the MSP back to FM demodulation mode.

During the search process, the FIR2 must be loaded with the coefficient set “AUTOSEARCH”, which enables small bandwidth, resulting in appropriate field strength characteristics. The absolute field strength value (can be read out of “quasi-peak detector output FM1”) also gives information on whether a main FM carrier or a subcarrier was detected; and as a practical consequence, the FM bandwidth (FIR1/2) and the deemphasis (50 µs or adaptive) can be switched accordingly.

Due to the fact that a constant demodulation frequency offset of a few kHz leads to a DC level in the demodulated signal, further fine tuning of the found carrier can be achieved by evaluating the “DC Level Readout FM1”. Therefore, the FM DC Notch must be switched on, and the demodulator part must be switched back to FM-demodulation mode.

6.5. Manual/Compatibility Mode: Description of DSP Write Registers

6.5.1. Additional Channel Matrix Modes

Loudspeaker Matrix	**00 08$_{hex}$**	**L**
Headphone Matrix	**00 09$_{hex}$**	**L**
SCART1 Matrix	**00 0A$_{hex}$**	**L**
SCART2 Matrix	**00 41$_{hex}$**	**L**
I^{2}S Matrix	**00 0B$_{hex}$**	**L**
Quasi-Peak Detector Matrix	**00 0C$_{hex}$**	**L**
SUM/DIFF	0100 0000	40$_{hex}$
AB_XCHANGE	0101 0000	50$_{hex}$
PHASE_CHANGE_B	0110 0000	60$_{hex}$
PHASE_CHANGE_A	0111 0000	70$_{hex}$
A_ONLY	1000 0000	80$_{hex}$
B_ONLY	1001 0000	90$_{hex}$

This table shows additional modes for the channel matrix registers.

The sum/difference mode can be used together with the quasi-peak detector to determine the sound material mode. If the difference signal on channel B (right) is near to zero, and the sum signal on channel A (left) is high, the incoming audio signal is mono. If there is a significant level on the difference signal, the incoming audio is stereo.

6.5.2. Volume Modes of SCART1/2 Outputs

Volume Mode SCART1	**00 07$_{hex}$**	**[3:0]**
Volume Mode SCART2	**00 40$_{hex}$**	**[3:0]**
linear	0000 RESET	0$_{hex}$
logarithmic	0001	1$_{hex}$

Linear Mode		
Volume SCART1	**00 07$_{hex}$**	**H**
Volume SCART2	**00 40$_{hex}$**	**H**
OFF	0000 0000 RESET	00$_{hex}$
0 dB gain (digital full scale (FS) to 2 V_{RMS} output)	0100 0000	40$_{hex}$
+6 dB gain (–6 dBFS to 2 V_{RMS} output)	0111 1111	7F$_{hex}$

Note: SCART Volume linear mode will not be supported in the future (documented for compatibility reasons only).

6.5.3. FM Fixed Deemphasis

FM Deemphasis	**00 0F$_{hex}$**	**H**
50 µs	0000 0000 RESET	00$_{hex}$
75 µs	0000 0001	01$_{hex}$
J17	0000 0100	04$_{hex}$
OFF	0011 1111	3F$_{hex}$

Note: This register is initialized during STANDARD SELECTION and is automatically updated when Auto-matic Sound Select (MODUS[0]=1) is on.

6.5.4. FM Adaptive Deemphasis

FM Adaptive Deemphasis WP1	**00 0F$_{hex}$**	**L**
OFF	0000 0000 RESET	00$_{hex}$
WP1	0011 1111	3F$_{hex}$

Note: This register is initialized during STANDARD SELECTION and is automatically updated when Auto-matic Sound Select (MODUS[0]=1) is on.

6.5.5. NICAM Deemphasis

A J17 Deemphasis is always applied to the NICAM signal. It is not switchable.

6.5.6. Identification Mode for A2 Stereo Systems

Identification Mode	00 15_{hex}	L
Standard B/G (German Stereo)	0000 0000 RESET	00_{hex}
Standard M (Korean Stereo)	0000 0001	01_{hex}
Reset of Ident-Filter	0011 1111	$3F_{hex}$

To shorten the response time of the identification algorithm after a program change between two FM-Stereo capable programs, the reset of the ident-filter can be applied.

Sequence:

1. Program change
2. Reset ident-filter
3. Set identification mode back to standard B/G or M
4. Wait approx. 500 ms
5. Read stereo detection register

Note: This register is initialized during STANDARD SELECTION and is automatically updated when Auto-matic Sound Select (MODUS[0]=1) is on.

6.5.7. FM DC Notch

The DC compensation filter (FM DC Notch) for FM input can be switched off. This is used to speed up the automatic search function (see Section 6.4.7.). In normal FM-mode, the FM DC Notch should be switched on.

FM DC Notch	00 17_{hex}	L
ON	0000 0000 Reset	00_{hex}
OFF	0011 1111	$3F_{hex}$

6.6. Manual/Compatibility Mode: Description of DSP Read Registers

All readable registers are 16-bit wide. Transmissions via I^2C bus have to take place in 16-bit words. Some of the defined 16-bit words are divided into low and high byte, thus holding two different control entities.

These registers are not writable.

6.6.1. Stereo Detection Register for A2 Stereo Systems

Stereo Detection Register	00 18_{hex}	H
Stereo Mode	Reading (two's complement)	
MONO	near zero	
STEREO	positive value (ideal reception: $7F_{hex}$)	
BILINGUAL	negative value (ideal reception: 80_{hex})	

Note: It is no longer necessary to read out and evaluate the A2 identification level. All evaluation is performed in the MSP and indicated in the STATUS register.

6.6.2. DC Level Register

DC Level Readout FM1 (MSP-Ch2)	00 $1B_{hex}$	H+L
DC Level Readout FM2 (MSP-Ch1)	00 $1C_{hex}$	H+L
DC Level	[8000_{hex} ... $7FFF_{hex}$] values are 16 bit two's complement	

The DC level register measures the DC component of the incoming FM signals (FM1 and FM2). This can be used for seek functions in satellite receivers and for IF FM frequencies fine tuning. A too low demodulation frequency (DCO) results in a positive DC-level and vice versa. For further processing, the DC content of the demodulated FM signals is suppressed. The time constant τ, defining the transition time of the DC Level Register, is approximately 28 ms.

6.7. Demodulator Source Channels in Manual Mode

6.7.1. Terrestric Sound Standards

Table 6–17 shows the source channel assignment of the demodulated signals in case of manual mode for all terrestric sound standards. See Table 2–2 for the assignment in the Automatic Sound Select mode. In manual mode for terrestric sound standards, only two demodulator sources are defined.

6.7.2. SAT Sound Standards

Table 6–18 shows the source channel assignment of the demodulated signals for SAT sound standards.

6.8. Exclusions of Audio Baseband Features

In general, all functions can be switched independently. Two exceptions exist:

1. NICAM cannot be processed simultaneously with the FM2 channel.
2. FM adaptive deemphasis cannot be processed simultaneously with FM-identification.

6.9. Compatibility Restrictions to MSP 34x0D

The MSP 34x2G is fully hardware compatible to the MSP 34x0D. However, to substitute a MSP 34x0D by the corresponding MSP 34x2G, the controller software has to be adapted slightly:

1. The register FM-Matrix (00 $0E_{hex}$ low part) must be changed from “no matrix (00_{hex})” to “sound A mono (03_{hex})” during mono transmission of all TV-sound standards (see also Table 6–17).
2. With the MSP 34x2G, the STANDARD SELECTION initializes the FM-deemphasis, which is not the case for the MSP 34x0D. So, if STANDARD SELECTION is applied, this I^2C instruction can be omitted.

Table 6–17: Manual Sound Select Mode for Terrestric Sound Standards

				Source Channels of Sound Select Block	
Broadcasted Sound Standard	**Selected MSP Standard Code**	**Broadcasted Sound Mode**	**FM Matrix**	**FM/AM** (use 0 for channel select)	**Stereo or A/B** (use 1 for channel select)
B/G-FM D/K-FM M-Korea M-Japan	03 04, 05 02 30	MONO	Sound A Mono	Mono	Mono
		STEREO	German Stereo Korean Stereo	Stereo	Stereo
		BILINGUAL, Languages A and B	No Matrix	Left = A Right = B	Left = A Right = B
B/G-NICAM L-NICAM I-NICAM D/K-NICAM D/K-NICAM (with high deviation FM)	08 09 0A 0B 0C, 0D	NICAM not available or NICAM error rate too high	Sound A Mono[1)]	analog Mono	no sound with AUTO_FM: analog Mono
		MONO	Sound A Mono[1)]	analog Mono	NICAM Mono
		STEREO	Sound A Mono[1)]	analog Mono	NICAM Stereo
		BILINGUAL, Languages A and B	Sound A Mono[1)]	analog Mono	Left = NICAM A Right = NICAM B
BTSC	20	MONO	Sound A Mono	Mono	Mono
		STEREO	Korean Stereo	Stereo	Stereo
		MONO + SAP	Sound A Mono	Mono	Mono
		STEREO + SAP	Korean Stereo	Stereo	Stereo
	21	MONO	Sound A Mono	Mono	Mono
		STEREO			
		MONO + SAP	No Matrix	Left = Mono Right = SAP	Left = Mono Right = SAP
		STEREO + SAP			
FM-Radio	40	MONO	Sound A Mono	Mono	Mono
		STEREO	Korean Stereo	Stereo	Stereo

[1)] Automatic refresh to Sound A Mono, do not write any other value to the register FM Matrix!

Table 6–18: Manual Sound Select Modes for SAT-Standards

				Source Channels of Sound Select Block for SAT-Modes			
Broadcasted Sound Standard	**Selected MSP Standard Code**	**Broadcasted Sound Mode**	**FM Matrix**	**FM/AM** (source select: 0)	**Stereo or A/B** (source select: 1)	**Stereo or A** (source select: 3)	**Stereo or B** (source select: 4)
FM SAT	$6, 50_{hex}$	MONO	Sound A Mono	Mono	Mono	Mono	Mono
	51_{hex}	STEREO	No Matrix	Stereo	Stereo	Stereo	Stereo
		BILINGUAL	No Matrix	Left = A (FM1) Right = B (FM2)	Left = A (FM1) Right = B (FM2)	A (FM1)	B (FM2)

7. Appendix C: Application Information

7.1. Phase Relationship of Analog Outputs

The analog output signals: Loudspeaker, headphone, and SCART2 all have the same phases. The user does not need to correct output phases when using these analog outputs directly. The SCART1 output has opposite phase.

Using the I^2S-outputs for other DSPs or D/A converters, care must be taken to adjust for the correct phase. If the attached coprocessor is one of the MSP family, the following schematics help to determine the phase relationship.

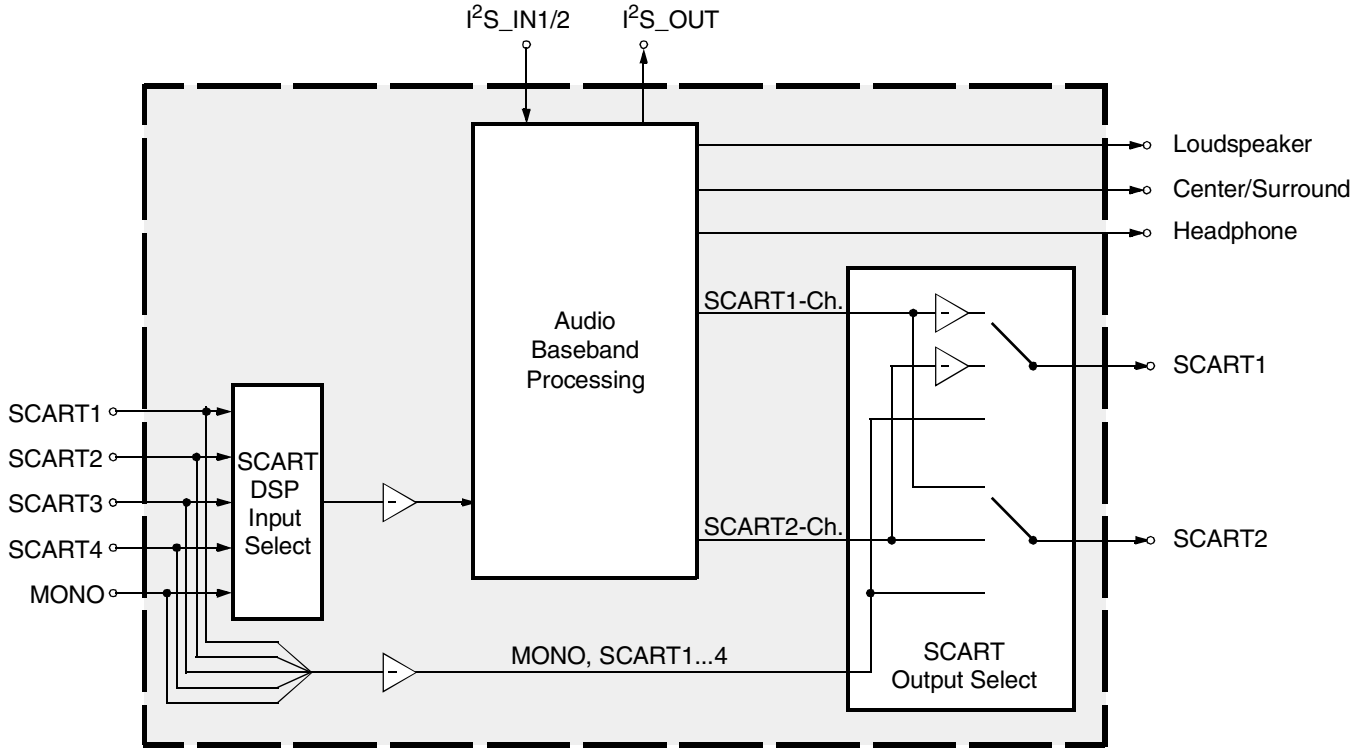

Fig. 7–1: Phase diagram of the MSP 34x2G

7.2. Application Circuit

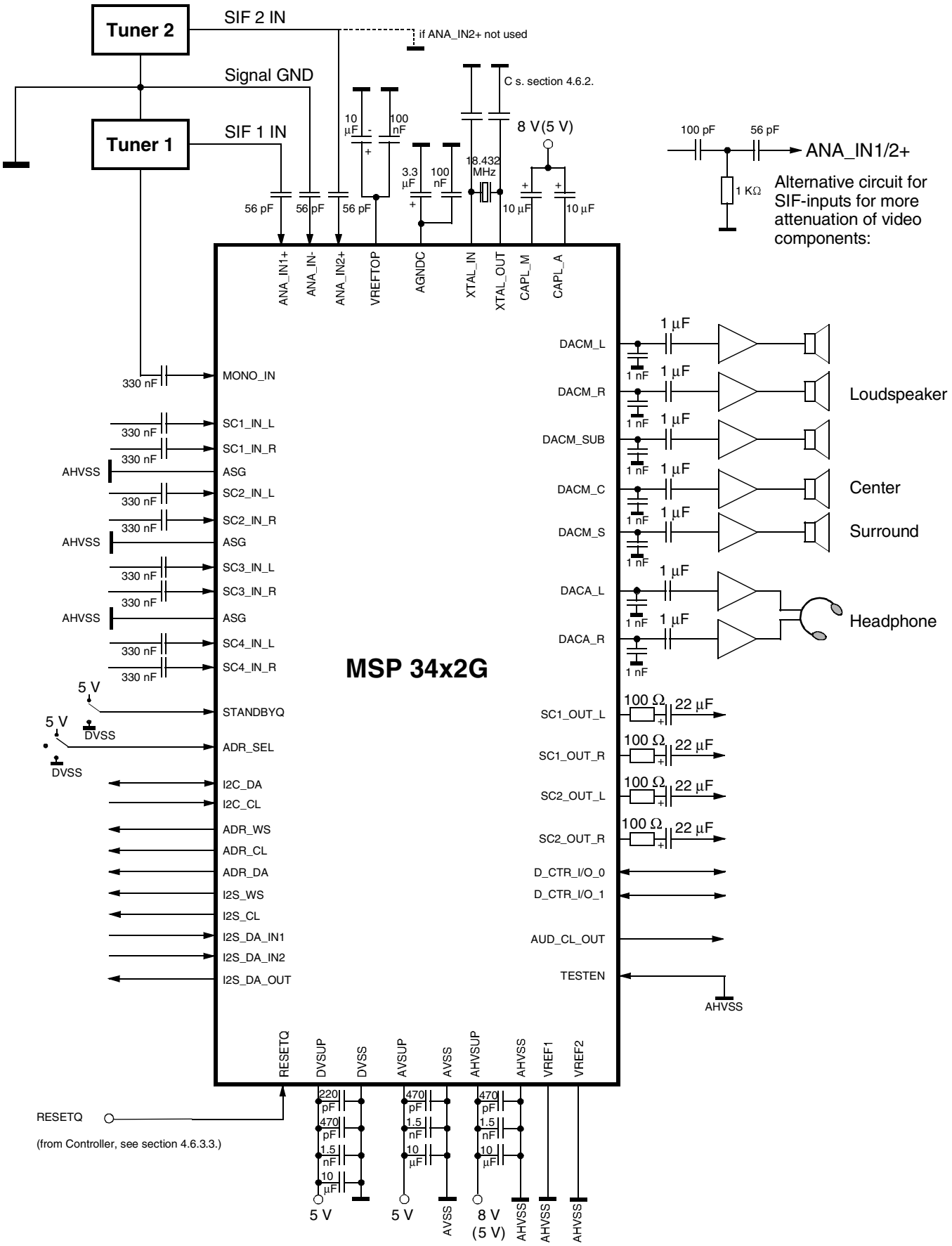

8. Appendix D: MSP 34x2G Version History

MSP 3452G-A1

First release

MSP 34x2G-A2

- J17 FM-deemphasis implemented
- MDB implemented
- acoustical compensation filter implemented
- several feedback paths to source selector added
- equalizer for center channel added
- Main path: switching facilities built in
- input specification for RESETQ and TESTEN changed

MSP 34x2G-B3

- FM-Radio available in non-BTSC versions with activation key MSP 3402G/3412G
- implementation of SRS WOW
- The Automatic Sound Select (ASS) malfunction has been corrected. In the previous version, under certain circumstances and depending on the baseband features used, e.g.: Micronas BASS, Virtual Surround Sound, Equalizer... etc., the Automatic Sound Select Feature (ASS) did not work correctly.

9. Data Sheet History

1. Preliminary data sheet: “MSP 34x2G Multistandard Sound Processor Family with Dolby Surround Pro Logic”, March 5, 2001, 6251-520-2PD. Second release of the preliminary data sheet.
   Major changes:

- specification for version A2 added (see Appendix E: Version History)
- description for MDB added
- I^2C-bus description changed
- ACB register: documentation for bit allocation D_CTR_I/O changed

2. Data Sheet: “MSP 34x2G Multistandard Sound Processor Family with Dolby Pro Logic”, June 3, 2003, 6251-520-1DS. First release of the data sheet.
   Major changes:

- specification for version B3 added
- implementation of SRS WOW
- Section 4.1.: diagrams for all packages changed
- PLQFP64 changed to PMQFP64-2
- Micronas Dynamic Bass (MDB) changed to Micronas BASS (MB)

Micronas GmbH
Hans-Bunte-Strasse 19
D-79108 Freiburg (Germany)
P.O. Box 840
D-79008 Freiburg (Germany)
Tel. +49-761-517-0
Fax +49-761-517-2174
E-mail: docservice@micronas.com
Internet: www.micronas.com

Printed in Germany
Order No. 6251-520-1DS