Order this document by MC3346/D

MOTOROLA

MC3346

General Purpose Transistor Array One Differentially Connected Pair and Three Isolated Transistor Arrays

The MC3346 is designed for general purpose, low power applications for consumer and industrial designs.

- Guaranteed Base–Emitter Voltage Matching
- Operating Current Range Specified: 10 μA to 10 mA
- Five General Purpose Transistors in One Package

GENERAL PURPOSE TRANSISTOR ARRAY

SEMICONDUCTOR TECHNICAL DATA

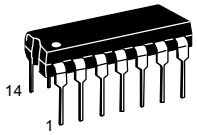

P SUFFIX
PLASTIC PACKAGE
CASE 646

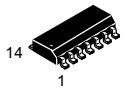

D SUFFIX
PLASTIC PACKAGE
CASE 751A
(SO–14)

MAXIMUM RATINGS

Rating	Symbol	Value	Unit
Collector–Emitter Voltage	V_{CEO}	15	Vdc
Collector–Base Voltage	V_{CBO}	20	Vdc
Emitter–Base Voltage	V_{EB}	5.0	Vdc
Collector–Substrate Voltage	V_{CIO}	20	Vdc
Collector Current – Continuous	I_C	50	mAdc
Total Power Dissipation @ T_A = 25°C Derate above 25°C	P_D	1.2 10	W mW/°C
Operating Temperature Range	T_A	–40 to +85	°C
Storage Temperature Range	T_{stg}	–65 to +150	°C

ORDERING INFORMATION

Device	Operating Temperature Range	Package
MC3346D	T_A = –40° to +85°C	SO–14
MC3356P		Plastic DIP

PIN CONNECTIONS

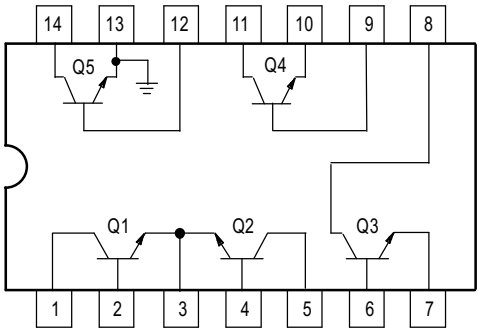

Pin 13 is connected to substrate and must remain at the lowest circuit potential.

ELECTRICAL CHARACTERISTICS (T_A = +25°C, unless otherwise noted.)

Characteristics	Symbol	Min	Typ	Max	Unit
STATIC CHARACTERISTICS					
Collector–Base Breakdown Voltage (I_C = 10 μAdc)	$V_{(BR)CBO}$	20	60	–	Vdc
Collector–Emitter Breakdown Voltage (I_C = 1.0 mAdc)	$V_{(BR)CEO}$	15	–	–	Vdc
Collector–Substrate Breakdown Voltage (I_C = 10 μA)	$V_{(BR)CIO}$	20	60	–	Vdc
Emitter–Base Breakdown Voltage (I_E = 10 μAdc)	$V_{(BR)EBO}$	5.0	7.0	–	Vdc
Collector–Base Cutoff Current (V_{CB} = 10 Vdc, I_E = 0)	I_{CBO}	–	–	40	nAdc
DC Current Gain (I_C = 10 mAdc, V_{CE} = 3.0 Vdc) (I_C = 1.0 mAdc, V_{CE} = 3.0 Vdc) (I_C = 10 μAdc, V_{CE} = 3.0 Vdc)	h_{FE}	 – 40 –	 140 130 60	 – – –	–
Base–Emitter Voltage (V_{CE} = 3.0 Vdc, I_E = 1.0 mAdc) (V_{CE} = 3.0 Vdc, I_E = 10 mAdc)	V_{BE}	 – –	 0.72 0.8	 – –	Vdc
Input Offset Current for Matched Pair Q1 and Q2 (V_{CE} = 3.0 Vdc, I_C = 1.0 mAdc)	$\lvert I_{IO1} - I_{IO2} \rvert$	–	0.3	2.0	μAdc
Magnitude of Input Offset Voltage (V_{CE} = 3.0 Vdc, I_C = 1.0 mAdc)	–	–	0.5	5.0	mVdc
Temperature Coefficient of Base–Emitter Voltage (V_{CE} = 3.0 Vdc, I_C = 1.0 mAdc)	$\frac{\Delta V_{BE}}{D_T}$	–	–1.9	–	mV/°C
Temperature Coefficient	$\frac{\lvert \Delta V_{IO} \rvert}{D_T}$	–	1.0	–	μV/°C
Collector–Emitter Cutoff Current (V_{CE} = 10 Vdc, I_B = 0)	I_{CEO}	–	–	0.5	μAdc
DYNAMIC CHARACTERISTICS					
Low Frequency Noise Figure (V_{CE} = 3.0 Vdc, I_C = 100 μAdc, R_S = 1.0 kΩ, f = 1.0 kHz)	NF	–	3.25	–	dB
Forward Current Transfer Ratio (V_{CE} = 3.0 Vdc, I_C = 1.0 mAdc, f = 1.0 kHz)	h_{FE}	–	110	–	–
Short Circuit Input Impedance (V_{CE} = 3.0 Vdc, I_C = 1.0 mAdc)	h_{ie}	–	3.5	–	kΩ
Open Circuit Output Impedance (V_{CE} = 3.0 Vdc, I_C = 1.0 mAdc)	h_{oe}	–	15.6	–	μmhos
Reverse Voltage Transfer Ratio (V_{CE} = 3.0 Vdc, I_C = 1.0 mAdc)	h_{re}	–	1.8	–	$x10^{-4}$
Forward Transfer Admittance (V_{CE} = 3.0 Vdc, I_C = 1.0 mAdc, f = 1.0 MHz)	y_{fe}	–	31–j1.5	–	–
Input Admittance (V_{CE} = 3.0 Vdc, I_C = 1.0 mAdc, f = 1.0 MHz)	y_{ie}	–	0.3 + j0.04	–	–
Output Admittance (V_{CE} = 3.0 Vdc, I_C = 1.0 mAdc, f = 1.0 MHz)	y_{oe}	–	0.001 + j0.03	–	–
Current–Gain – Bandwidth Product (V_{CE} = 3.0 Vdc, I_C = 3.0 mAdc)	f_T	300	550	–	MHz
Emitter–Base Capacitance (V_{EB} = 3.0 Vdc, I_E = 0)	C_{eb}	–	0.6	–	pF
Collector–Base Capacitance (V_{CB} = 3.0 Vdc, I_C = 0)	C_{cb}	–	0.58	–	pF
Collector–Substrate Capacitance (V_{CS} = 3.0 Vdc, I_C = 0)	C_{CI}	–	2.8	–	pF

Figure 1. Collector Cutoff Current versus Temperature (Each Transistor)

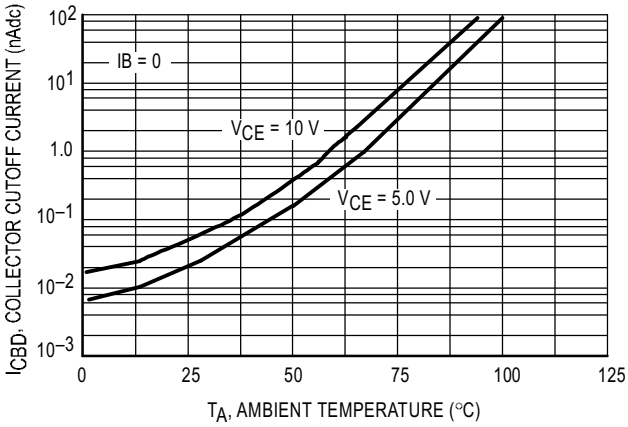

Figure 2. Collector Cutoff Current versus Temperature (Each Transistor)

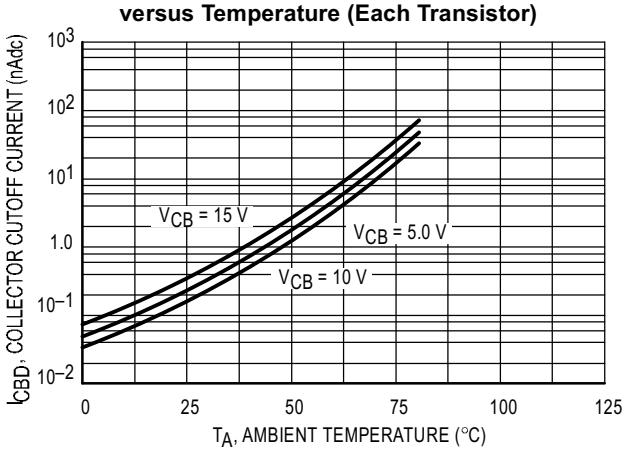

Figure 3. Input Offset Characteristics for Q1 and Q2

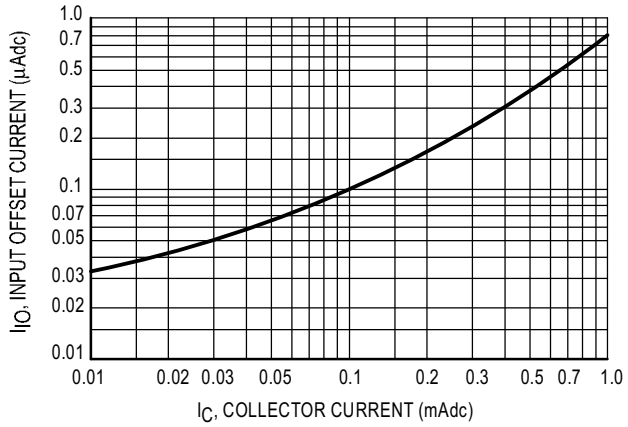

Figure 4. Base–Emitter and Input Offset Voltage Characteristics

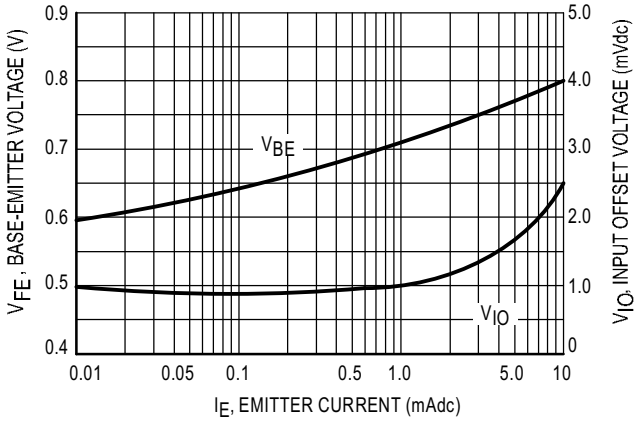

Figure 5. DC Current Gain

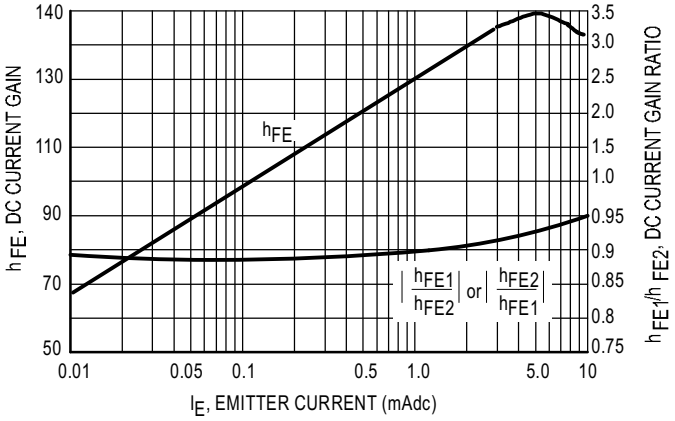

OUTLINE DIMENSIONS

P SUFFIX
PLASTIC PACKAGE
CASE 646–06
ISSUE L

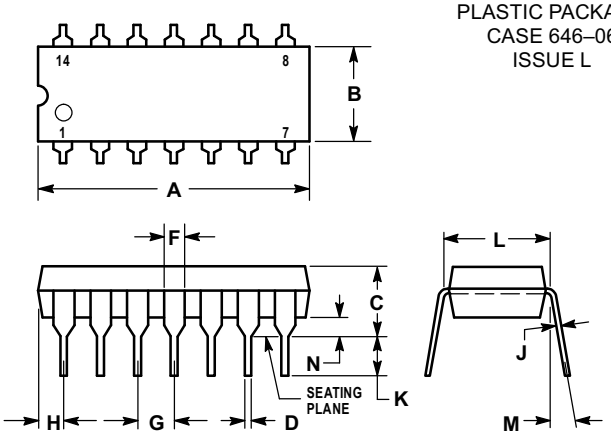

NOTES:
1. LEADS WITHIN 0.13 (0.005) RADIUS OF TRUE POSITION AT SEATING PLANE AT MAXIMUM MATERIAL CONDITION.
2. DIMENSION L TO CENTER OF LEADS WHEN FORMED PARALLEL.
3. DIMENSION B DOES NOT INCLUDE MOLD FLASH.
4. ROUNDED CORNERS OPTIONAL.

	INCHES		MILLIMETERS	
DIM	MIN	MAX	MIN	MAX
A	0.715	0.770	18.16	19.56
B	0.240	0.260	6.10	6.60
C	0.145	0.185	3.69	4.69
D	0.015	0.021	0.38	0.53
F	0.040	0.070	1.02	1.78
G	0.100 BSC		2.54 BSC	
H	0.052	0.095	1.32	2.41
J	0.008	0.015	0.20	0.38
K	0.115	0.135	2.92	3.43
L	0.300 BSC		7.62 BSC	
M	0°	10°	0°	10°
N	0.015	0.039	0.39	1.01

D SUFFIX
PLASTIC PACKAGE
CASE 751A–03
(SO–8)
ISSUE F

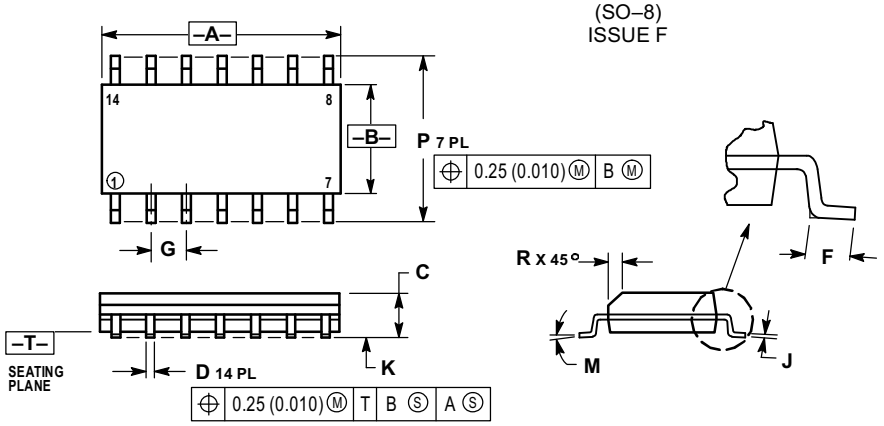

NOTES:
1. DIMENSIONING AND TOLERANCING PER ANSI Y14.5M, 1982.
2. CONTROLLING DIMENSION: MILLIMETER.
3. DIMENSIONS A AND B DO NOT INCLUDE MOLD PROTRUSION.
4. MAXIMUM MOLD PROTRUSION 0.15 (0.006) PER SIDE.
5. DIMENSION D DOES NOT INCLUDE DAMBAR PROTRUSION. ALLOWABLE DAMBAR PROTRUSION SHALL BE 0.127 (0.005) TOTAL IN EXCESS OF THE D DIMENSION AT MAXIMUM MATERIAL CONDITION.

	MILLIMETERS		INCHES	
DIM	MIN	MAX	MIN	MAX
A	8.55	8.75	0.337	0.344
B	3.80	4.00	0.150	0.157
C	1.35	1.75	0.054	0.068
D	0.35	0.49	0.014	0.019
F	0.40	1.25	0.016	0.049
G	1.27 BSC		0.050 BSC	
J	0.19	0.25	0.008	0.009
K	0.10	0.25	0.004	0.009
M	0°	7°	0°	7°
P	5.80	6.20	0.228	0.244
R	0.25	0.50	0.010	0.019

How to reach us:
USA / EUROPE / Locations Not Listed: Motorola Literature Distribution; P.O. Box 20912; Phoenix, Arizona 85036. 1–800–441–2447 or 602–303–5454

MFAX: RMFAX0@email.sps.mot.com – TOUCHTONE 602–244–6609
INTERNET: http://Design–NET.com

JAPAN: Nippon Motorola Ltd.; Tatsumi–SPD–JLDC, 6F Seibu–Butsuryu–Center, 3–14–2 Tatsumi Koto–Ku, Tokyo 135, Japan. 03–81–3521–8315

ASIA / PACIFIC: Motorola Semiconductors H.K. Ltd.; 8B Tai Ping Industrial Park, 51 Ting Kok Road, Tai Po, N.T., Hong Kong. 852–26629298