- **Single Supply or Dual Supplies**
- **Wide Range of Supply Voltage**
  - **Max Rating . . . 2 V to 36 V**
  - **Tested to 30 V . . . Non-V Devices**
  - **Tested to 32 V . . . V-Suffix Devices**
- **Low Supply-Current Drain Independent of Supply Voltage . . . 0.4 mA Typ Per Comparator**
- **Low Input Bias Current . . . 25 nA Typ**
- **Low Input Offset Current . . . 3 nA Typ (LM193)**
- **Low Input Offset Voltage . . . 2 mV Typ**
- **Common-Mode Input Voltage Range Includes Ground**
- **Differential Input Voltage Range Equal to Maximum-Rated Supply Voltage . . . ±36 V**
- **Low Output Saturation Voltage**
- **Output Compatible With TTL, MOS, and CMOS**

LM193 . . . D OR JG PACKAGE
LM293 . . . D, DGK, OR P PACKAGE
LM293A . . . D OR DGK PACKAGE
LM393, LM393A . . . D, DGK, P, PS, OR PW PACKAGE
LM2903 . . . D, DGK, P, PS, OR PW PACKAGE
(TOP VIEW)

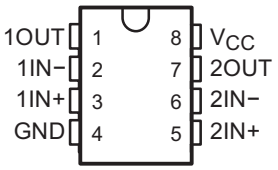

LM193 . . . FK PACKAGE
(TOP VIEW)

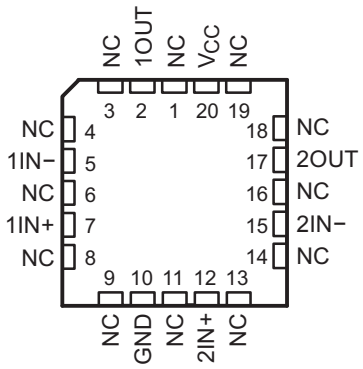

NC − No internal connection

description/ordering information

These devices consist of two independent voltage comparators that are designed to operate from a single power supply over a wide range of voltages. Operation from dual supplies also is possible as long as the difference between the two supplies is 2 V to 36 V, and V_{CC} is at least 1.5 V more positive than the input common-mode voltage. Current drain is independent of the supply voltage. The outputs can be connected to other open-collector outputs to achieve wired-AND relationships.

The LM193 is characterized for operation from −55°C to 125°C. The LM293 and LM293A are characterized for operation from −25°C to 85°C. The LM393 and LM393A are characterized for operation from 0°C to 70°C. The LM2903 is characterized for operation from −40°C to 125°C.

Please be aware that an important notice concerning availability, standard warranty, and use in critical applications of Texas Instruments semiconductor products and disclaimers thereto appears at the end of this data sheet.

PRODUCTION DATA information is current as of publication date. Products conform to specifications per the terms of Texas Instruments standard warranty. Production processing does not necessarily include testing of all parameters.

Copyright © 2004, Texas Instruments Incorporated
On products compliant to MIL-PRF-38535, all parameters are tested unless otherwise noted. On all other products, production processing does not necessarily include testing of all parameters.

description/ordering information (continued)

ORDERING INFORMATION

T_A	V_{IOmax} AT 25°C	MAX V_{CC}	PACKAGE†		ORDERABLE PART NUMBER	TOP-SIDE MARKING
0°C to 70°C	5 mV	30 V	PDIP (P)	Tube of 50	LM393P	LM393P
			SOIC (D)	Tube of 75	LM393D	LM393
				Reel of 2500	LM393DR	
			SOP (PS)	Reel of 2000	LM393PSR	L393
			TSSOP (PW)	Tube of 150	LM393PW	L393
				Reel of 2000	LM393PWR	
			MSOP/VSSOP (DGK)	Reel of 2500	LM393DGKR	M9_‡
	2 mV	30 V	PDIP (P)	Tube of 50	LM393AP	LM393AP
			SOIC (D)	Tube of 75	LM393AD	LM393A
				Reel of 2500	LM393ADR	
			SOP (PS)	Reel of 2000	LM393APSR	L393A
			TSSOP (PW)	Reel of 2000	LM393APWR	L393A
			MSOP/VSSOP (DGK)	Reel of 2500	LM393ADGKR	M8_‡
−25°C to 85°C	5 mV	30 V	PDIP (P)	Tube of 50	LM293P	LM293P
			SOIC (D)	Tube of 75	LM293D	LM293
				Reel of 2500	LM293DR	
			MSOP/VSSOP (DGK)	Reel of 2500	LM293DGKR	MC_‡
	2 mV	30 V	SOIC (D)	Tube of 75	LM293AD	LM293A
				Reel of 2500	LM293ADR	
			MSOP/VSSOP (DGK)	Reel of 2500	LM293ADGKR	MD_‡
−40°C to 125°C	7 mV	30 V	PDIP (P)	Tube of 50	LM2903P	LM2903P
			SOIC (D)	Tube of 75	LM2903D	LM2903
				Reel of 2500	LM2903DR	
			SOP (PS)	Reel of 2000	LM2903PSR	L2903
			TSSOP (PW)	Reel of 2000	LM2903PWR	L2903
			MSOP/VSSOP (DGK)	Reel of 2500	LM2903DGKR	MA_‡
	7 mV	32 V	SOIC (D)	Reel of 2500	LM2903VQDR	L2903V
			TSSOP (PW)	Reel of 2000	LM2903VQPWR	L2903V
	2 mV	32 V	SOIC (D)	Reel of 2500	LM2903AVQDR	L2903AV
			TSSOP (PW)	Reel of 2000	LM2903AVQPWR	L2903AV
−55°C to 125°C	5 mV	30 V	CDIP (JG)	Tube of 50	LM193JG	LM193JG
			LCCC (FK)	Tube of 55	LM193FK	LM193FK
			SOIC (D)	Reel of 2500	LM193DR	LM193

† Package drawings, standard packing quantities, thermal data, symbolization, and PCB design guidelines are available at www.ti.com/sc/package.
‡ The actual top-side marking has one additional character that designates the assembly/test site.

symbol (each comparator)

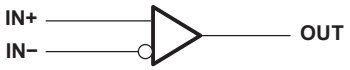

schematic (each comparator)

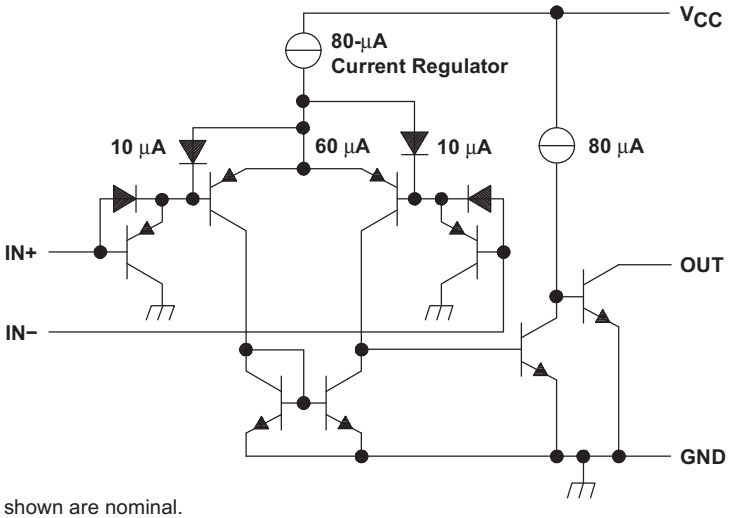

COMPONENT COUNT	
Epi-FET	1
Diodes	2
Resistors	2
Transistors	30

Current values shown are nominal.

absolute maximum ratings over operating free-air temperature range (unless otherwise noted)†

Supply voltage, V_{CC} (see Note 1)		36 V
Differential input voltage, V_{ID} (see Note 2)		±36 V
Input voltage range, V_I (either input)		−0.3 V to 36 V
Output voltage, V_O		36 V
Output current, I_O		20 mA
Duration of output short-circuit to ground (see Note 3)		Unlimited
Package thermal impedance, θ_{JA} (see Notes 4 and 5):	D package	97°C/W
	DGK package	172°C/W
	P package	85°C/W
	PS package	95°C/W
	PW package	149°C/W
Package thermal impedance, θ_{JC} (see Notes 6 and 7):	FK package	5.61°C/W
	JG package	14.5°C/W
Operating virtual junction temperature, T_J		150°C
Case temperature for 60 seconds: FK package		260°C
Lead temperature 1,6 mm (1/16 inch) from case for 60 seconds: JG package		300°C
Storage temperature range, T_{stg}		−65°C to 150°C

† Stresses beyond those listed under “absolute maximum ratings” may cause permanent damage to the device. These are stress ratings only, and functional operation of the device at these or any other conditions beyond those indicated under “recommended operating conditions” is not implied. Exposure to absolute-maximum-rated conditions for extended periods may affect device reliability.

NOTES:
1. All voltage values, except differential voltages, are with respect to GND.
2. Differential voltages are at IN+, with respect to IN−.
3. Short circuits from outputs to V_{CC} can cause excessive heating and eventual destruction.
4. Maximum power dissipation is a function of $T_J(max)$, θ_{JA}, and T_A. The maximum allowable power dissipation at any allowable ambient temperature is $P_D = (T_J(max) - T_A)/\theta_{JA}$. Operating at the absolute maximum T_J of 150°C can affect reliability.
5. The package thermal impedance is calculated in accordance with JESD 51-7.
6. Maximum power dissipation is a function of $T_J(max)$, θ_{JC}, and T_C. The maximum allowable power dissipation at any allowable case temperature is $P_D = (T_J(max) - T_C)/\theta_{JC}$. Operating at the absolute maximum T_J of 150°C can affect reliability.
7. The package thermal impedance is calculated in accordance with MIL-STD-883.

electrical characteristics at specified free-air temperature, V_{CC} = 5 V (unless otherwise noted)

PARAMETER		TEST CONDITIONS		T_A†	LM193			LM293 LM393			UNIT
					MIN	TYP	MAX	MIN	TYP	MAX	
V_{IO}	Input offset voltage	V_{CC} = 5 V to 30 V, V_O = 1.4 V, V_{IC} = $V_{IC(min)}$		25°C		2	5		2	5	mV
				Full range			9			9	
I_{IO}	Input offset current	V_O = 1.4 V		25°C		3	25		5	50	nA
				Full range			100			250	
I_{IB}	Input bias current	V_O = 1.4 V		25°C		−25	−100		−25	−250	nA
				Full range			−300			−400	
V_{ICR}	Common-mode input voltage range‡			25°C	0 to V_{CC} − 1.5			0 to V_{CC} − 1.5			V
				Full range	0 to V_{CC} − 2			0 to V_{CC} − 2			
A_{VD}	Large-signal differential-voltage amplification	V_{CC} = 15 V, V_O = 1.4 V to 11.4 V, R_L ≥ 15 kΩ to V_{CC}		25°C	50	200		50	200		V/mV
I_{OH}	High-level output current	V_{OH} = 5 V,	V_{ID} = 1 V	25°C		0.1			0.1	50	nA
		V_{OH} = 30 V,	V_{ID} = 1 V	Full range			1			1	µA
V_{OL}	Low-level output voltage	I_{OL} = 4 mA,	V_{ID} = −1 V	25°C		150	400		150	400	mV
				Full range			700			700	
I_{OL}	Low-level output current	V_{OL} = 1.5 V,	V_{ID} = −1 V	25°C	6			6			mA
I_{CC}	Supply current	R_L = ∞	V_{CC} = 5 V	25°C		0.8	1		0.8	1	mA
			V_{CC} = 30 V	Full range			2.5			2.5	

† Full range (MIN or MAX) for LM193 is −55°C to 125°C, for LM293 is 25°C to 85°C, and for LM393 is 0°C to 70°C. All characteristics are measured with zero common-mode input voltage, unless otherwise specified.

‡ The voltage at either input or common-mode should not be allowed to go negative by more than 0.3 V. The upper end of the common-mode voltage range is V_{CC+} − 1.5 V, but either or both inputs can go to 30 V without damage.

electrical characteristics at specified free-air temperature, V_{CC} = 5 V (unless otherwise noted)

PARAMETER		TEST CONDITIONS		T_A†	LM293A LM393A MIN	TYP	MAX	UNIT
V_{IO}	Input offset voltage	V_{CC} = 5 V to 30 V, V_O = 1.4 V, V_{IC} = $V_{IC(min)}$		25°C		1	2	mV
				Full range			4	
I_{IO}	Input offset current	V_O = 1.4 V		25°C		5	50	nA
				Full range			150	
I_{IB}	Input bias current	V_O = 1.4 V		25°C		−25	−250	nA
				Full range			−400	
V_{ICR}	Common-mode input voltage range§			25°C	0 to V_{CC} − 1.5			V
				Full range	0 to V_{CC} − 2			
A_{VD}	Large-signal differential-voltage amplification	V_{CC} = 15 V, V_O = 1.4 V to 11.4 V, R_L ≥ 15 kΩ to V_{CC}		25°C	50	200		V/mV
I_{OH}	High-level output current	V_{OH} = 5 V,	V_{ID} = 1 V	25°C		0.1	50	nA
		V_{OH} = 30 V,	V_{ID} = 1 V	Full range			1	µA
V_{OL}	Low-level output voltage	I_{OL} = 4 mA,	V_{ID} = −1 V	25°C		150	400	mV
				Full range			700	
I_{OL}	Low-level output current	V_{OL} = 1.5 V,	V_{ID} = −1 V	25°C	6			mA
I_{CC}	Supply current	R_L = ∞	V_{CC} = 5 V	25°C		0.8	1	mA
			V_{CC} = 30 V	Full range			2.5	

† Full range (MIN or MAX) for LM293A is 25°C to 85°C, and for LM393A is 0°C to 70°C. All characteristics are measured with zero common-mode input voltage, unless otherwise specified.

§ The voltage at either input or common-mode should not be allowed to go negative by more than 0.3 V. The upper end of the common-mode voltage range is V_{CC+} − 1.5 V, but either or both inputs can go to 30 V without damage.

electrical characteristics at specified free-air temperature, V_{CC} = 5 V (unless otherwise noted)

PARAMETER		TEST CONDITIONS	T_A†	LM2903			LM2903A			UNIT
				MIN	TYP	MAX	MIN	TYP	MAX	
V_{IO}	Input offset voltage	V_{CC} = 5 V to MAX‡, V_O = 1.4 V, V_{IC} = $V_{IC(min)}$	25°C		2	7		1	2	mV
			Full range			15			4	
I_{IO}	Input offset current	V_O = 1.4 V	25°C		5	50		5	50	nA
			Full range			200			200	
I_{IB}	Input bias current	V_O = 1.4 V	25°C		−25	−250		−25	−250	nA
			Full range			−500			−500	
V_{ICR}	Common-mode input voltage range§		25°C	0 to V_{CC} − 1.5			0 to V_{CC} − 1.5			V
			Full range	0 to V_{CC} − 2			0 to V_{CC} − 2			
A_{VD}	Large-signal differential-voltage amplification	V_{CC} = 15 V, V_O = 1.4 V to 11.4 V, R_L ≥ 15 kΩ to V_{CC}	25°C	25	100		25	100		V/mV
I_{OH}	High-level output current	V_{OH} = 5 V, V_{ID} = 1 V	25°C		0.1	50		0.1	50	nA
		V_{OH} = V_{CC} MAX, V_{ID} = 1 V	Full range			1			1	µA
V_{OL}	Low-level output voltage	I_{OL} = 4 mA, V_{ID} = −1 V	25°C		150	400		150	400	mV
			Full range			700			700	
I_{OL}	Low-level output current	V_{OL} = 1.5 V, V_{ID} = −1 V	25°C	6			6			mA
I_{CC}	Supply current	R_L = ∞, V_{CC} = 5 V	25°C		0.8	1		0.8	1	mA
		R_L = ∞, V_{CC} = MAX	Full range			2.5			2.5	

† Full range (MIN or MAX) for LM2903 is −40°C to 125°C. All characteristics are measured with zero common-mode input voltage, unless otherwise specified.
‡ V_{CC} MAX = 30 V for non-V devices and 32 V for V-suffix devices.
§ The voltage at either input or common-mode should not be allowed to go negative by more than 0.3 V. The upper end of the common-mode voltage range is V_{CC+} − 1.5 V, but either or both inputs can go to 30 V (32 V for V-suffix devices) without damage.

switching characteristics, V_{CC} = 5 V, T_A = 25°C

PARAMETER	TEST CONDITIONS		LM193, LM293, LM293A, LM393, LM393A, LM2903 TYP	UNIT
Response time	R_L connected to 5 V through 5.1 kΩ, C_L = 15 pF¶, See Note 8	100-mV input step with 5-mV overdrive	1.3	µs
		TTL-level input step	0.3	

¶ C_L includes probe and jig capacitance.
NOTE 8: The response time specified is the interval between the input step function and the instant when the output crosses 1.4 V.

PACKAGING INFORMATION

Orderable Device	Status (1)	Package Type	Package Drawing	Pins	Package Qty	Eco Plan (2)	Lead/Ball Finish	MSL Peak Temp (3)
5962-9452601Q2A	ACTIVE	LCCC	FK	20	1	TBD	POST-PLATE	Level-NC-NC-NC
5962-9452601QPA	ACTIVE	CDIP	JG	8	1	TBD	A42 SNPB	Level-NC-NC-NC
JM38510/11202BPA	ACTIVE	CDIP	JG	8	1	TBD	A42 SNPB	Level-NC-NC-NC
LM193DR	ACTIVE	SOIC	D	8	2500	TBD	CU NIPDAU	Level-1-220C-UNLIM
LM193FKB	ACTIVE	LCCC	FK	20	1	TBD	POST-PLATE	Level-NC-NC-NC
LM193JG	ACTIVE	CDIP	JG	8	1	TBD	A42 SNPB	Level-NC-NC-NC
LM193JGB	ACTIVE	CDIP	JG	8	1	TBD	A42 SNPB	Level-NC-NC-NC
LM2903AVQDR	ACTIVE	SOIC	D	8	2500	Pb-Free (RoHS)	CU NIPDAU	Level-2-250C-1 YEAR/ Level-1-235C-UNLIM
LM2903AVQPWR	ACTIVE	TSSOP	PW	8	2000	TBD	CU NIPDAU	Level-1-250C-UNLIM
LM2903D	ACTIVE	SOIC	D	8	75	Green (RoHS & no Sb/Br)	CU NIPDAU	Level-1-260C-UNLIM
LM2903DE4	ACTIVE	SOIC	D	8	75	Green (RoHS & no Sb/Br)	CU NIPDAU	Level-1-260C-UNLIM
LM2903DG4	ACTIVE	SOIC	D	8	75	Green (RoHS & no Sb/Br)	CU NIPDAU	Level-1-260C-UNLIM
LM2903DGKR	ACTIVE	MSOP	DGK	8	2500	Green (RoHS & no Sb/Br)	CU NIPDAU	Level-1-260C-UNLIM
LM2903DGKRG4	ACTIVE	MSOP	DGK	8	2500	Green (RoHS & no Sb/Br)	CU NIPDAU	Level-1-260C-UNLIM
LM2903DR	ACTIVE	SOIC	D	8	2500	Green (RoHS & no Sb/Br)	CU NIPDAU	Level-1-260C-UNLIM
LM2903DRE4	ACTIVE	SOIC	D	8	2500	Green (RoHS & no Sb/Br)	CU NIPDAU	Level-1-260C-UNLIM
LM2903DRG4	ACTIVE	SOIC	D	8	2500	Green (RoHS & no Sb/Br)	CU NIPDAU	Level-1-260C-UNLIM
LM2903P	ACTIVE	PDIP	P	8	50	Pb-Free (RoHS)	CU NIPDAU	Level-NC-NC-NC
LM2903PE4	ACTIVE	PDIP	P	8	50	Pb-Free (RoHS)	CU NIPDAU	Level-NC-NC-NC
LM2903PSR	ACTIVE	SO	PS	8	2000	Green (RoHS & no Sb/Br)	CU NIPDAU	Level-1-260C-UNLIM
LM2903PSRG4	ACTIVE	SO	PS	8	2000	Green (RoHS & no Sb/Br)	CU NIPDAU	Level-1-260C-UNLIM
LM2903PWG4	ACTIVE	TSSOP	PW	8	150	Green (RoHS & no Sb/Br)	CU NIPDAU	Level-1-260C-UNLIM
LM2903PWLE	OBSOLETE	TSSOP	PW	8		TBD	Call TI	Call TI
LM2903PWR	ACTIVE	TSSOP	PW	8	2000	Green (RoHS & no Sb/Br)	CU NIPDAU	Level-1-260C-UNLIM
LM2903PWRE4	ACTIVE	TSSOP	PW	8	2000	Green (RoHS & no Sb/Br)	CU NIPDAU	Level-1-260C-UNLIM
LM2903PWRG4	ACTIVE	TSSOP	PW	8	2000	Green (RoHS & no Sb/Br)	CU NIPDAU	Level-1-260C-UNLIM
LM2903QD	NRND	SOIC	D	8	75	TBD	CU NIPDAU	Level-1-220C-UNLIM
LM2903QDR	NRND	SOIC	D	8	2500	TBD	CU NIPDAU	Level-1-220C-UNLIM
LM2903QP	OBSOLETE	PDIP	P	8		TBD	Call TI	Call TI
LM2903VQDR	ACTIVE	SOIC	D	8	2500	Pb-Free	CU NIPDAU	Level-2-250C-1 YEAR/

Orderable Device	Status (1)	Package Type	Package Drawing	Pins	Package Qty	Eco Plan (2)	Lead/Ball Finish	MSL Peak Temp (3)
						(RoHS)		Level-1-235C-UNLIM
LM2903VQPWR	ACTIVE	TSSOP	PW	8	2000	TBD	CU NIPDAU	Level-1-250C-UNLIM
LM293AD	ACTIVE	SOIC	D	8	75	Green (RoHS & no Sb/Br)	CU NIPDAU	Level-1-260C-UNLIM
LM293ADE4	ACTIVE	SOIC	D	8	75	Green (RoHS & no Sb/Br)	CU NIPDAU	Level-1-260C-UNLIM
LM293ADG4	ACTIVE	SOIC	D	8	75	Green (RoHS & no Sb/Br)	CU NIPDAU	Level-1-260C-UNLIM
LM293ADGKR	ACTIVE	MSOP	DGK	8	2500	Green (RoHS & no Sb/Br)	CU NIPDAU	Level-1-260C-UNLIM
LM293ADR	ACTIVE	SOIC	D	8	2500	Green (RoHS & no Sb/Br)	CU NIPDAU	Level-1-260C-UNLIM
LM293ADRE4	ACTIVE	SOIC	D	8	2500	Green (RoHS & no Sb/Br)	CU NIPDAU	Level-1-260C-UNLIM
LM293ADRG4	ACTIVE	SOIC	D	8	2500	Green (RoHS & no Sb/Br)	CU NIPDAU	Level-1-260C-UNLIM
LM293D	ACTIVE	SOIC	D	8	75	Green (RoHS & no Sb/Br)	CU NIPDAU	Level-1-260C-UNLIM
LM293DE4	ACTIVE	SOIC	D	8	75	Green (RoHS & no Sb/Br)	CU NIPDAU	Level-1-260C-UNLIM
LM293DG4	ACTIVE	SOIC	D	8	75	Green (RoHS & no Sb/Br)	CU NIPDAU	Level-1-260C-UNLIM
LM293DGKR	ACTIVE	MSOP	DGK	8	2500	Green (RoHS & no Sb/Br)	CU NIPDAU	Level-1-260C-UNLIM
LM293DR	ACTIVE	SOIC	D	8	2500	Green (RoHS & no Sb/Br)	CU NIPDAU	Level-1-260C-UNLIM
LM293DRE4	ACTIVE	SOIC	D	8	2500	Green (RoHS & no Sb/Br)	CU NIPDAU	Level-1-260C-UNLIM
LM293DRG4	ACTIVE	SOIC	D	8	2500	Green (RoHS & no Sb/Br)	CU NIPDAU	Level-1-260C-UNLIM
LM293P	ACTIVE	PDIP	P	8	50	Pb-Free (RoHS)	CU NIPDAU	Level-NC-NC-NC
LM293PE4	ACTIVE	PDIP	P	8	50	Pb-Free (RoHS)	CU NIPDAU	Level-NC-NC-NC
LM393AD	ACTIVE	SOIC	D	8	75	Green (RoHS & no Sb/Br)	CU NIPDAU	Level-1-260C-UNLIM
LM393ADE4	ACTIVE	SOIC	D	8	75	Green (RoHS & no Sb/Br)	CU NIPDAU	Level-1-260C-UNLIM
LM393ADG4	ACTIVE	SOIC	D	8	75	Green (RoHS & no Sb/Br)	CU NIPDAU	Level-1-260C-UNLIM
LM393ADGKR	ACTIVE	MSOP	DGK	8	2500	Green (RoHS & no Sb/Br)	CU NIPDAU	Level-1-260C-UNLIM
LM393ADR	ACTIVE	SOIC	D	8	2500	Green (RoHS & no Sb/Br)	CU NIPDAU	Level-1-260C-UNLIM
LM393ADRE4	ACTIVE	SOIC	D	8	2500	Green (RoHS & no Sb/Br)	CU NIPDAU	Level-1-260C-UNLIM
LM393ADRG4	ACTIVE	SOIC	D	8	2500	Green (RoHS & no Sb/Br)	CU NIPDAU	Level-1-260C-UNLIM
LM393AP	ACTIVE	PDIP	P	8	50	Pb-Free (RoHS)	CU NIPDAU	Level-NC-NC-NC
LM393APE4	ACTIVE	PDIP	P	8	50	Pb-Free	CU NIPDAU	Level-NC-NC-NC

Orderable Device	Status (1)	Package Type	Package Drawing	Pins	Package Qty	Eco Plan (2)	Lead/Ball Finish	MSL Peak Temp (3)
						(RoHS)		
LM393APSR	ACTIVE	SO	PS	8	2000	Green (RoHS & no Sb/Br)	CU NIPDAU	Level-1-260C-UNLIM
LM393APSRE4	ACTIVE	SO	PS	8	2000	Green (RoHS & no Sb/Br)	CU NIPDAU	Level-1-260C-UNLIM
LM393APWLE	OBSOLETE	TSSOP	PW	8		TBD	Call TI	Call TI
LM393APWR	ACTIVE	TSSOP	PW	8	2000	Green (RoHS & no Sb/Br)	CU NIPDAU	Level-1-260C-UNLIM
LM393APWRE4	ACTIVE	TSSOP	PW	8	2000	Green (RoHS & no Sb/Br)	CU NIPDAU	Level-1-260C-UNLIM
LM393D	ACTIVE	SOIC	D	8	75	Green (RoHS & no Sb/Br)	CU NIPDAU	Level-1-260C-UNLIM
LM393DE4	ACTIVE	SOIC	D	8	75	Green (RoHS & no Sb/Br)	CU NIPDAU	Level-1-260C-UNLIM
LM393DG4	ACTIVE	SOIC	D	8	75	Green (RoHS & no Sb/Br)	CU NIPDAU	Level-1-260C-UNLIM
LM393DGKR	ACTIVE	MSOP	DGK	8	2500	Green (RoHS & no Sb/Br)	CU NIPDAU	Level-1-260C-UNLIM
LM393DR	ACTIVE	SOIC	D	8	2500	Green (RoHS & no Sb/Br)	CU NIPDAU	Level-1-260C-UNLIM
LM393DRE4	ACTIVE	SOIC	D	8	2500	Green (RoHS & no Sb/Br)	CU NIPDAU	Level-1-260C-UNLIM
LM393DRG4	ACTIVE	SOIC	D	8	2500	Green (RoHS & no Sb/Br)	CU NIPDAU	Level-1-260C-UNLIM
LM393P	ACTIVE	PDIP	P	8	50	Pb-Free (RoHS)	CU NIPDAU	Level-NC-NC-NC
LM393PE4	ACTIVE	PDIP	P	8	50	Pb-Free (RoHS)	CU NIPDAU	Level-NC-NC-NC
LM393PSLE	OBSOLETE	SO	PS	8		TBD	Call TI	Call TI
LM393PSR	ACTIVE	SO	PS	8	2000	Green (RoHS & no Sb/Br)	CU NIPDAU	Level-1-260C-UNLIM
LM393PSRG4	ACTIVE	SO	PS	8	2000	Green (RoHS & no Sb/Br)	CU NIPDAU	Level-1-260C-UNLIM
LM393PW	ACTIVE	TSSOP	PW	8	150	Green (RoHS & no Sb/Br)	CU NIPDAU	Level-1-260C-UNLIM
LM393PWE4	ACTIVE	TSSOP	PW	8	150	Green (RoHS & no Sb/Br)	CU NIPDAU	Level-1-260C-UNLIM
LM393PWLE	OBSOLETE	TSSOP	PW	8		TBD	Call TI	Call TI
LM393PWR	ACTIVE	TSSOP	PW	8	2000	Green (RoHS & no Sb/Br)	CU NIPDAU	Level-1-260C-UNLIM
LM393PWRE4	ACTIVE	TSSOP	PW	8	2000	TBD	Call TI	Call TI
LM393PWRG4	ACTIVE	TSSOP	PW	8	2000	Green (RoHS & no Sb/Br)	CU NIPDAU	Level-1-260C-UNLIM

(1) The marketing status values are defined as follows:
ACTIVE: Product device recommended for new designs.
LIFEBUY: TI has announced that the device will be discontinued, and a lifetime-buy period is in effect.
NRND: Not recommended for new designs. Device is in production to support existing customers, but TI does not recommend using this part in a new design.
PREVIEW: Device has been announced but is not in production. Samples may or may not be available.
OBSOLETE: TI has discontinued the production of the device.

(2) Eco Plan - The planned eco-friendly classification: Pb-Free (RoHS) or Green (RoHS & no Sb/Br) - please check http://www.ti.com/productcontent for the latest availability information and additional product content details.
TBD: The Pb-Free/Green conversion plan has not been defined.
Pb-Free (RoHS): TI's terms "Lead-Free" or "Pb-Free" mean semiconductor products that are compatible with the current RoHS requirements for all 6 substances, including the requirement that lead not exceed 0.1% by weight in homogeneous materials. Where designed to be soldered at high temperatures, TI Pb-Free products are suitable for use in specified lead-free processes.
Green (RoHS & no Sb/Br): TI defines "Green" to mean Pb-Free (RoHS compatible), and free of Bromine (Br) and Antimony (Sb) based flame retardants (Br or Sb do not exceed 0.1% by weight in homogeneous material)

(3) MSL, Peak Temp. -- The Moisture Sensitivity Level rating according to the JEDEC industry standard classifications, and peak solder temperature.

Important Information and Disclaimer: The information provided on this page represents TI's knowledge and belief as of the date that it is provided. TI bases its knowledge and belief on information provided by third parties, and makes no representation or warranty as to the accuracy of such information. Efforts are underway to better integrate information from third parties. TI has taken and continues to take reasonable steps to provide representative and accurate information but may not have conducted destructive testing or chemical analysis on incoming materials and chemicals. TI and TI suppliers consider certain information to be proprietary, and thus CAS numbers and other limited information may not be available for release.

In no event shall TI's liability arising out of such information exceed the total purchase price of the TI part(s) at issue in this document sold by TI to Customer on an annual basis.

JG (R-GDIP-T8) **CERAMIC DUAL-IN-LINE**

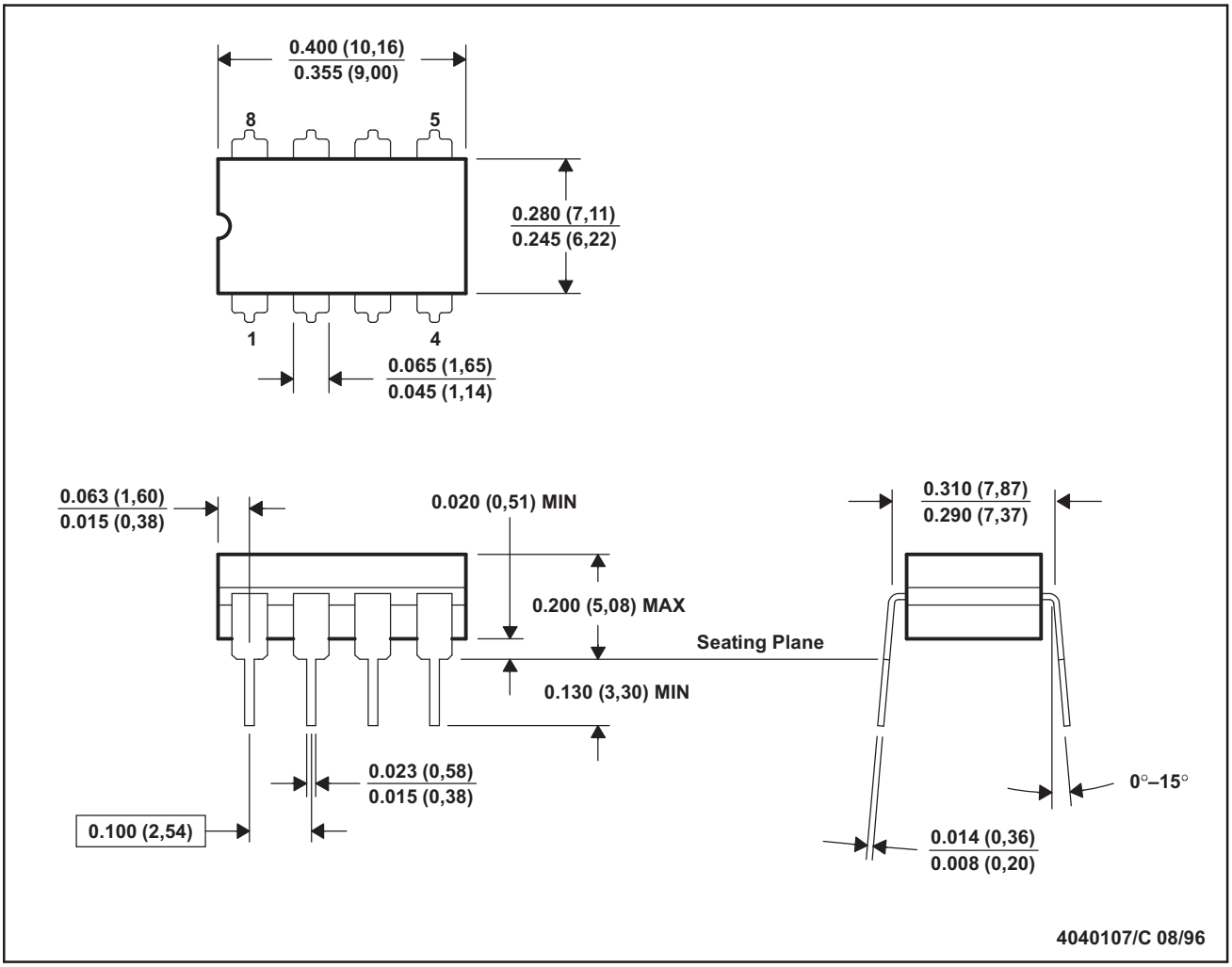

NOTES: A. All linear dimensions are in inches (millimeters).
B. This drawing is subject to change without notice.
C. This package can be hermetically sealed with a ceramic lid using glass frit.
D. Index point is provided on cap for terminal identification.
E. Falls within MIL STD 1835 GDIP1-T8

FK (S-CQCC-N**)

LEADLESS CERAMIC CHIP CARRIER

28 TERMINAL SHOWN

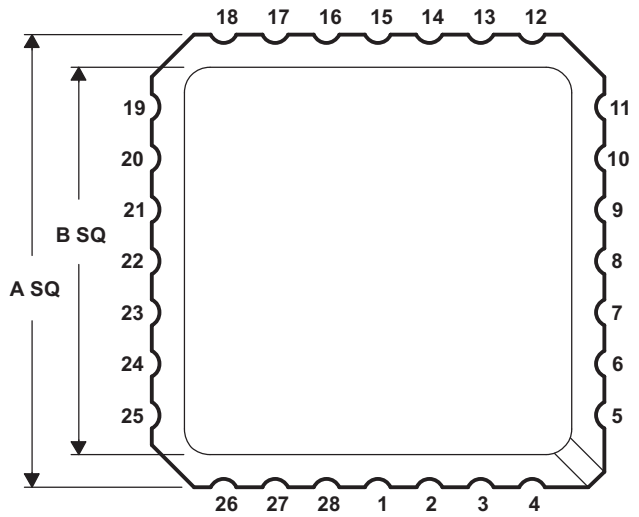

NO. OF TERMINALS **	A		B	
	MIN	MAX	MIN	MAX
20	0.342 (8,69)	0.358 (9,09)	0.307 (7,80)	0.358 (9,09)
28	0.442 (11,23)	0.458 (11,63)	0.406 (10,31)	0.458 (11,63)
44	0.640 (16,26)	0.660 (16,76)	0.495 (12,58)	0.560 (14,22)
52	0.739 (18,78)	0.761 (19,32)	0.495 (12,58)	0.560 (14,22)
68	0.938 (23,83)	0.962 (24,43)	0.850 (21,6)	0.858 (21,8)
84	1.141 (28,99)	1.165 (29,59)	1.047 (26,6)	1.063 (27,0)

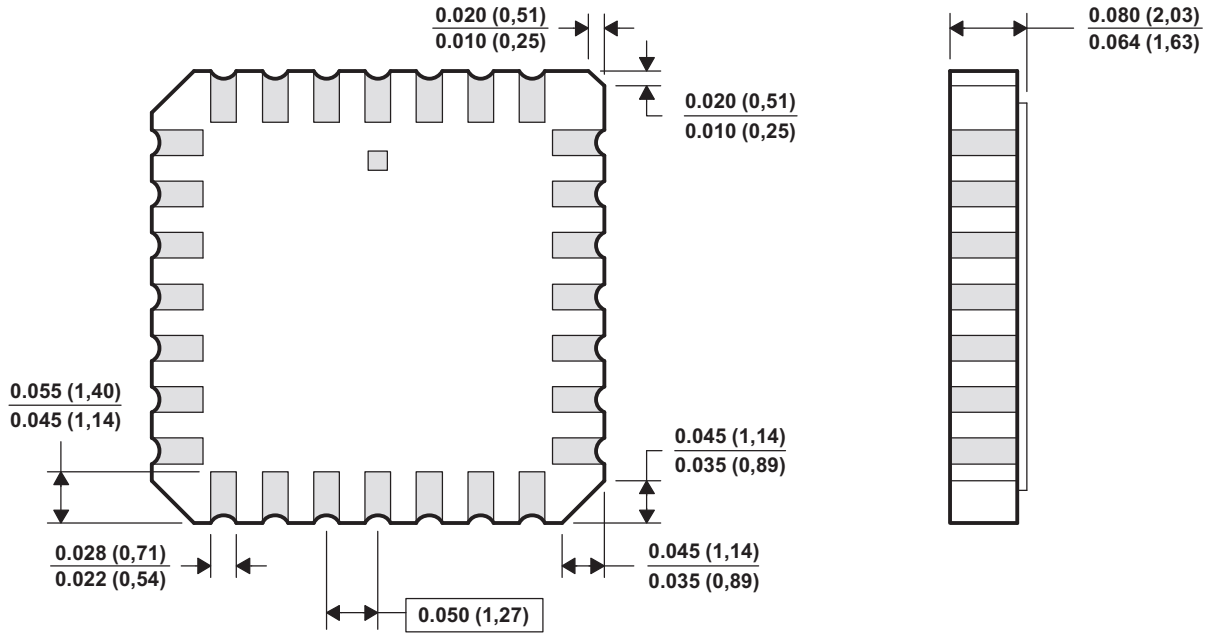

4040140 / D 10/96

NOTES:
A. All linear dimensions are in inches (millimeters).
B. This drawing is subject to change without notice.
C. This package can be hermetically sealed with a metal lid.
D. The terminals are gold plated.
E. Falls within JEDEC MS-004

MPDI001A – JANUARY 1995 – REVISED JUNE 1999

P (R-PDIP-T8) **PLASTIC DUAL-IN-LINE**

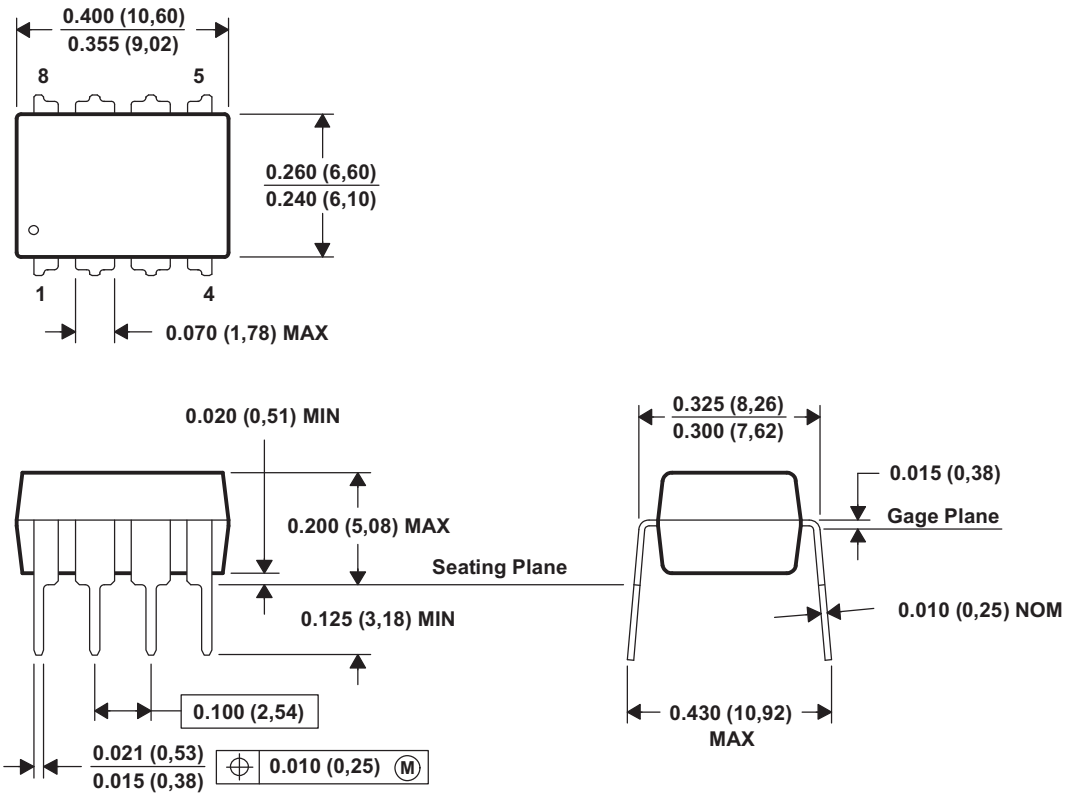

NOTES: A. All linear dimensions are in inches (millimeters).
B. This drawing is subject to change without notice.
C. Falls within JEDEC MS-001

For the latest package information, go to http://www.ti.com/sc/docs/package/pkg_info.htm

DGK (S–PDSO–G8) PLASTIC SMALL–OUTLINE PACKAGE

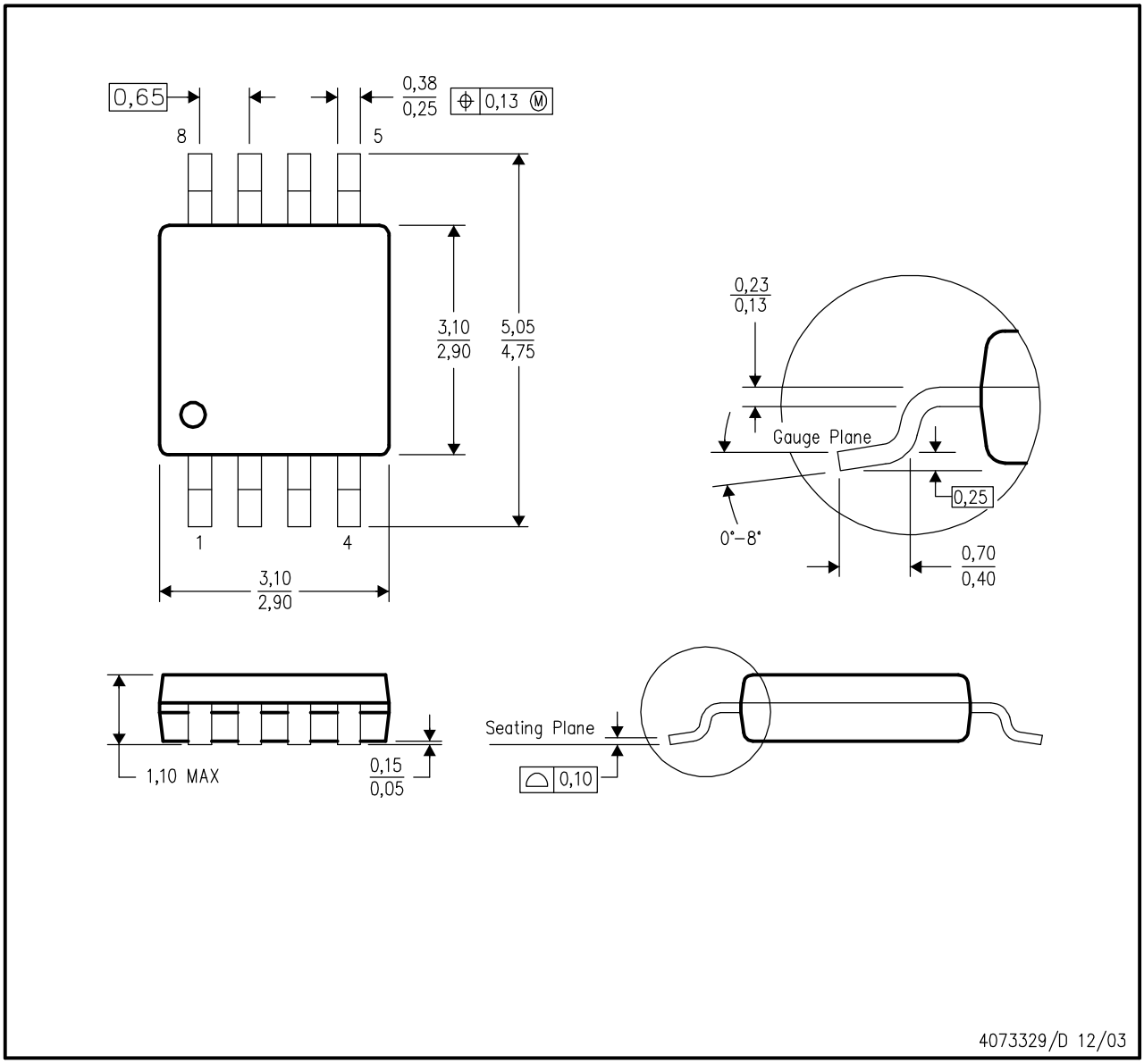

NOTES:
A. All linear dimensions are in millimeters.
B. This drawing is subject to change without notice.
C. Body dimensions do not include mold flash or protrusion.
D. Falls within JEDEC MO–187 variation AA.

D (R–PDSO–G8) PLASTIC SMALL–OUTLINE PACKAGE

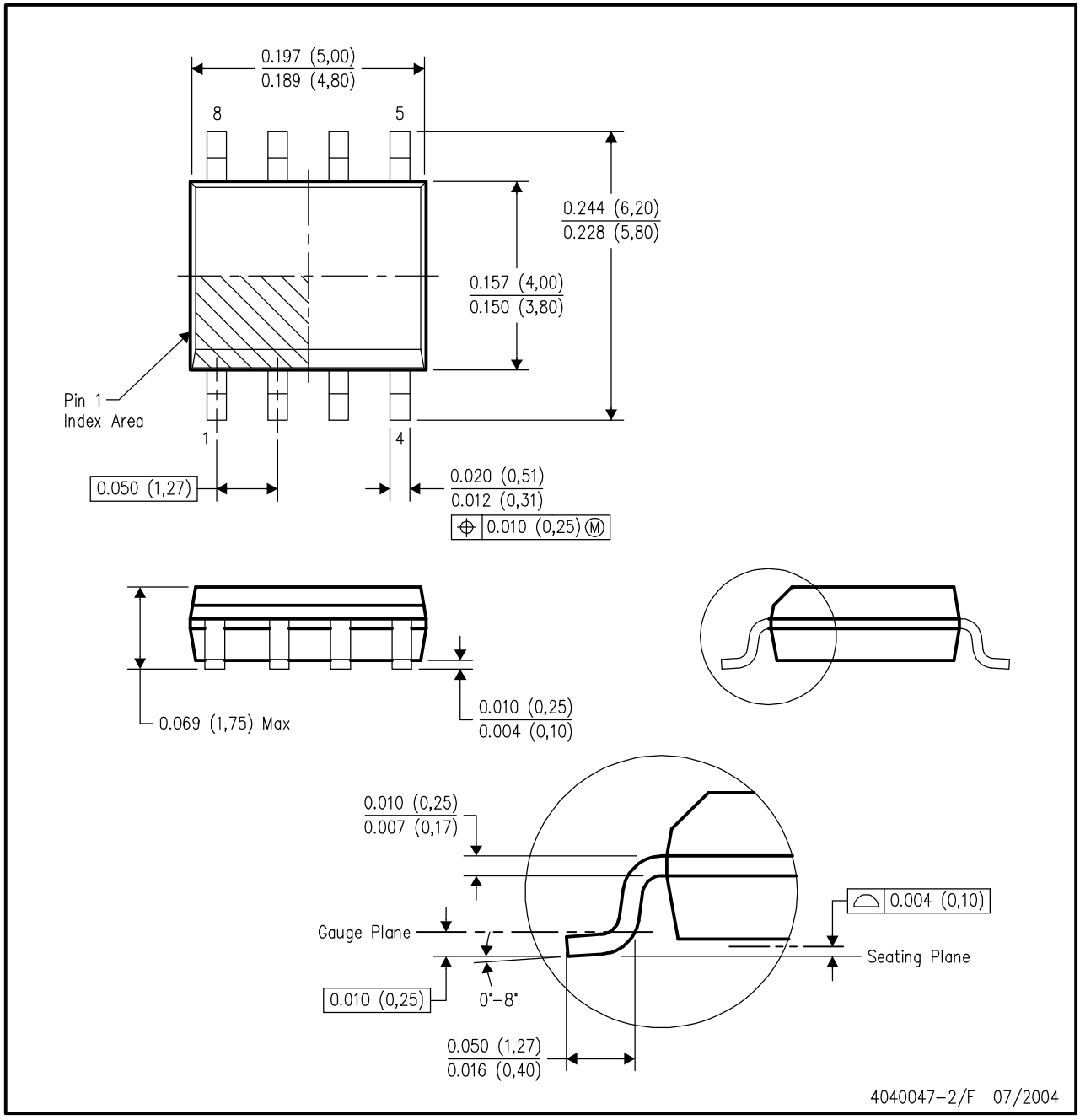

NOTES:
A. All linear dimensions are in inches (millimeters).
B. This drawing is subject to change without notice.
C. Body dimensions do not include mold flash or protrusion not to exceed 0.006 (0,15).
D. Falls within JEDEC MS–012 variation AA.

MECHANICAL DATA

PS (R-PDSO-G8) **PLASTIC SMALL-OUTLINE PACKAGE**

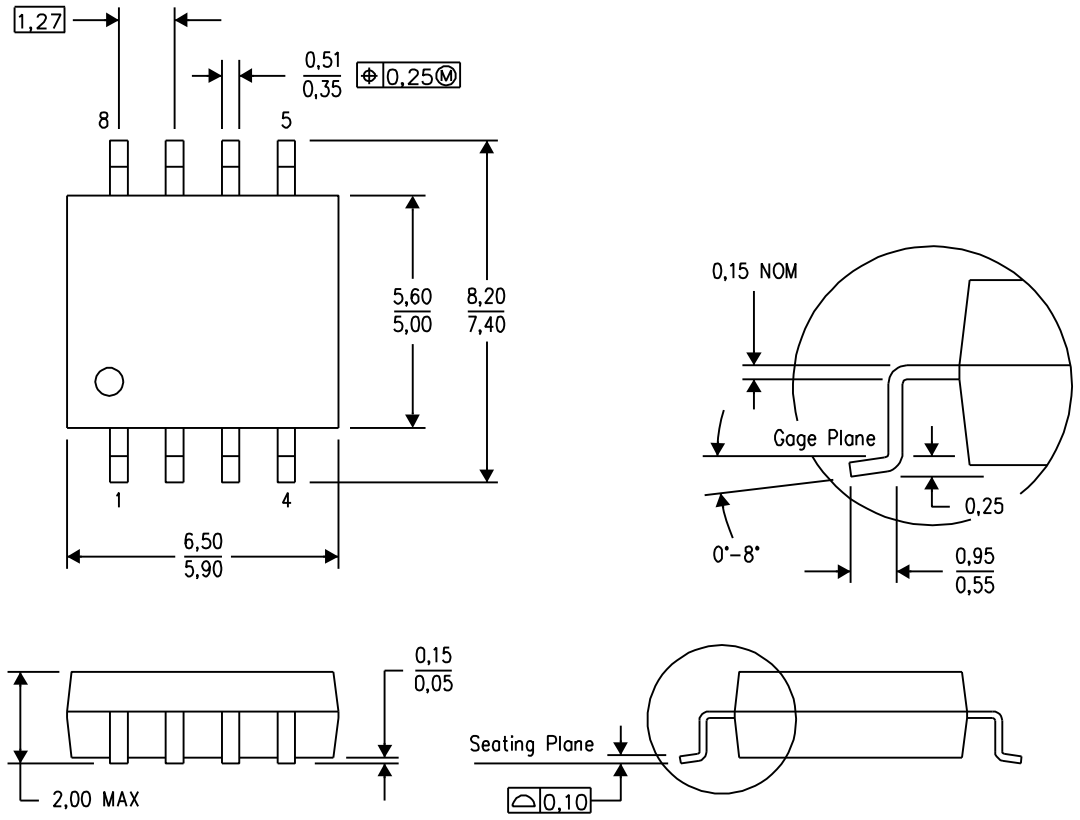

NOTES:
A. All linear dimensions are in millimeters.
B. This drawing is subject to change without notice.
C. Body dimensions do not include mold flash or protrusion, not to exceed 0,15.

PW (R-PDSO-G)** **PLASTIC SMALL-OUTLINE PACKAGE**

14 PINS SHOWN

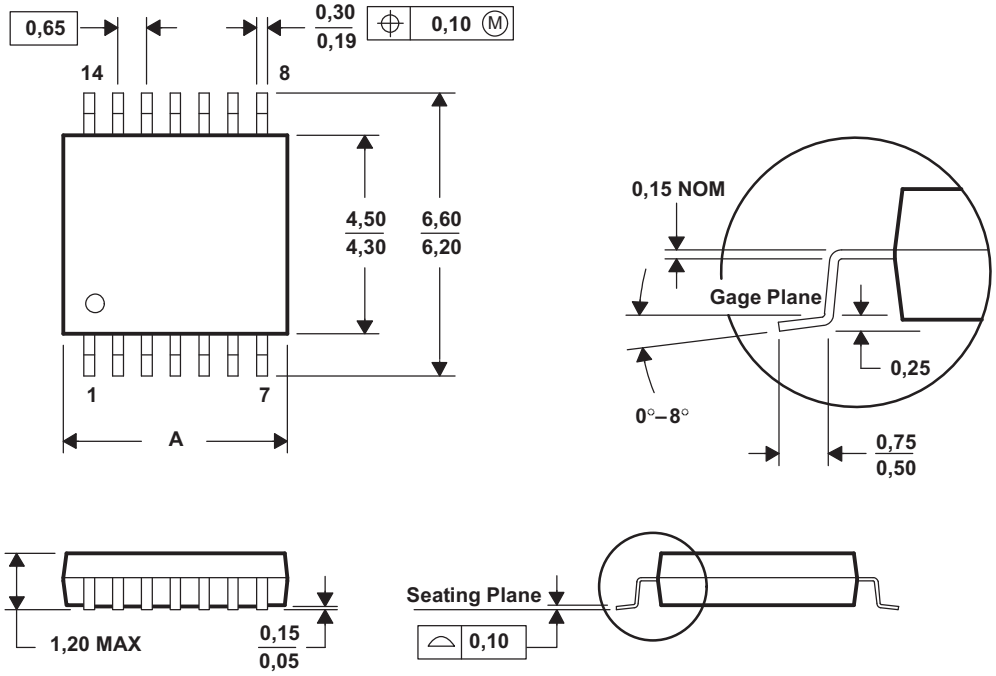

DIM \ PINS **	8	14	16	20	24	28
A MAX	3,10	5,10	5,10	6,60	7,90	9,80
A MIN	2,90	4,90	4,90	6,40	7,70	9,60

4040064/F 01/97

NOTES: A. All linear dimensions are in millimeters.
B. This drawing is subject to change without notice.
C. Body dimensions do not include mold flash or protrusion not to exceed 0,15.
D. Falls within JEDEC MO-153

IMPORTANT NOTICE

Texas Instruments Incorporated and its subsidiaries (TI) reserve the right to make corrections, modifications, enhancements, improvements, and other changes to its products and services at any time and to discontinue any product or service without notice. Customers should obtain the latest relevant information before placing orders and should verify that such information is current and complete. All products are sold subject to TI's terms and conditions of sale supplied at the time of order acknowledgment.

TI warrants performance of its hardware products to the specifications applicable at the time of sale in accordance with TI's standard warranty. Testing and other quality control techniques are used to the extent TI deems necessary to support this warranty. Except where mandated by government requirements, testing of all parameters of each product is not necessarily performed.

TI assumes no liability for applications assistance or customer product design. Customers are responsible for their products and applications using TI components. To minimize the risks associated with customer products and applications, customers should provide adequate design and operating safeguards.

TI does not warrant or represent that any license, either express or implied, is granted under any TI patent right, copyright, mask work right, or other TI intellectual property right relating to any combination, machine, or process in which TI products or services are used. Information published by TI regarding third-party products or services does not constitute a license from TI to use such products or services or a warranty or endorsement thereof. Use of such information may require a license from a third party under the patents or other intellectual property of the third party, or a license from TI under the patents or other intellectual property of TI.

Reproduction of information in TI data books or data sheets is permissible only if reproduction is without alteration and is accompanied by all associated warranties, conditions, limitations, and notices. Reproduction of this information with alteration is an unfair and deceptive business practice. TI is not responsible or liable for such altered documentation.

Resale of TI products or services with statements different from or beyond the parameters stated by TI for that product or service voids all express and any implied warranties for the associated TI product or service and is an unfair and deceptive business practice. TI is not responsible or liable for any such statements.

Following are URLs where you can obtain information on other Texas Instruments products and application solutions:

Products		**Applications**	
Amplifiers	amplifier.ti.com	Audio	www.ti.com/audio
Data Converters	dataconverter.ti.com	Automotive	www.ti.com/automotive
DSP	dsp.ti.com	Broadband	www.ti.com/broadband
Interface	interface.ti.com	Digital Control	www.ti.com/digitalcontrol
Logic	logic.ti.com	Military	www.ti.com/military
Power Mgmt	power.ti.com	Optical Networking	www.ti.com/opticalnetwork
Microcontrollers	microcontroller.ti.com	Security	www.ti.com/security
		Telephony	www.ti.com/telephony
		Video & Imaging	www.ti.com/video
		Wireless	www.ti.com/wireless

Mailing Address: Texas Instruments
Post Office Box 655303 Dallas, Texas 75265

Copyright © 2005, Texas Instruments Incorporated