National Semiconductor

August 2002

LM193/LM293/LM393/LM2903
Low Power Low Offset Voltage Dual Comparators

General Description

The LM193 series consists of two independent precision voltage comparators with an offset voltage specification as low as 2.0 mV max for two comparators which were designed specifically to operate from a single power supply over a wide range of voltages. Operation from split power supplies is also possible and the low power supply current drain is independent of the magnitude of the power supply voltage. These comparators also have a unique characteristic in that the input common-mode voltage range includes ground, even though operated from a single power supply voltage.

Application areas include limit comparators, simple analog to digital converters; pulse, squarewave and time delay generators; wide range VCO; MOS clock timers; multivibrators and high voltage digital logic gates. The LM193 series was designed to directly interface with TTL and CMOS. When operated from both plus and minus power supplies, the LM193 series will directly interface with MOS logic where their low power drain is a distinct advantage over standard comparators.

The LM393 and LM2903 parts are available in National's innovative thin micro SMD package with 8 (12 mil) large bumps.

Advantages

- High precision comparators
- Reduced V_{OS} drift over temperature
- Eliminates need for dual supplies
- Allows sensing near ground
- Compatible with all forms of logic
- Power drain suitable for battery operation

Features

- Wide supply
  - — Voltage range: 2.0V to 36V
  - — Single or dual supplies: ±1.0V to ±18V
- Very low supply current drain (0.4 mA) — independent of supply voltage
- Low input biasing current: 25 nA
- Low input offset current: ±5 nA
- Maximum offset voltage: ±3 mV
- Input common-mode voltage range includes ground
- Differential input voltage range equal to the power supply voltage
- Low output saturation voltage,: 250 mV at 4 mA
- Output voltage compatible with TTL, DTL, ECL, MOS and CMOS logic systems
- Available in the 8-Bump (12 mil) micro SMD package
- See AN-1112 for micro SMD considerations

Squarewave Oscillator

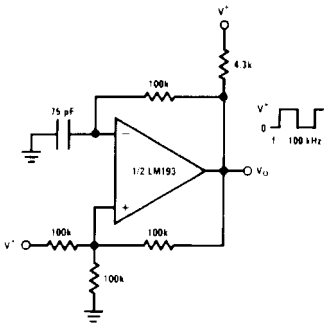

00570938

Non-Inverting Comparator with Hysteresis

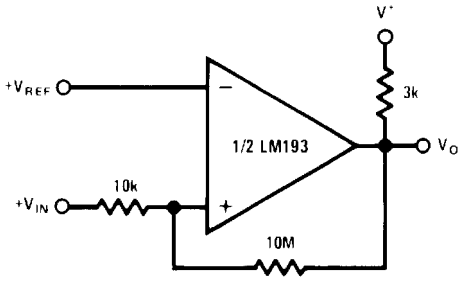

00570909

Schematic and Connection Diagrams

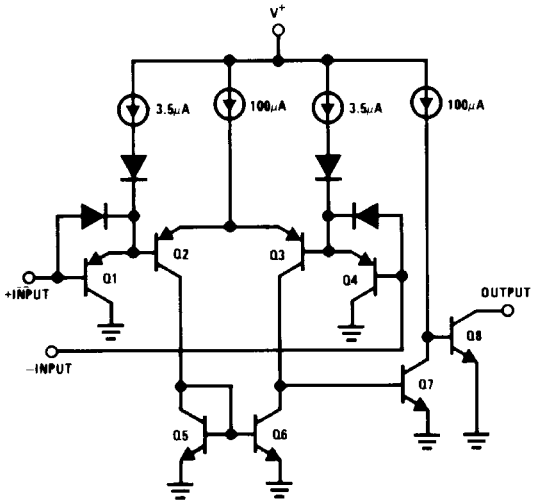

00570902

Metal Can Package

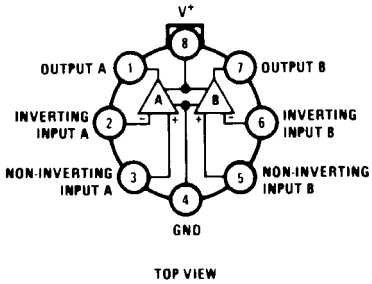

00570903

Dual-In-Line/SOIC Package

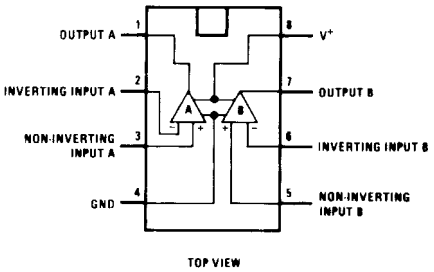

00570901

micro SMD

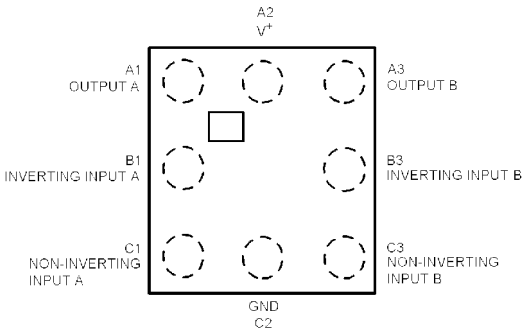

00570945

Top View

micro SMD Marking

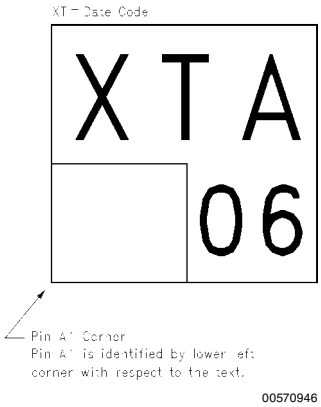

00570946

Top View

Absolute Maximum Ratings (Note 10)

If Military/Aerospace specified devices are required, please contact the National Semiconductor Sales Office/ Distributors for availability and specifications.

Supply Voltage, V^+	36V
Differential Input Voltage (Note 8)	36V
Input Voltage	−0.3V to +36V
Input Current (V_{IN}<−0.3V) (Note 3)	50 mA
Power Dissipation (Note 1)	
Molded DIP	780 mW
Metal Can	660 mW
Small Outline Package	510 mW
micro SMD Pacakge	568mW
Output Short-Circuit to Ground (Note 2)	Continuous
Operating Temperature Range	
LM393	0˚C to +70˚C
LM293	−25˚C to +85˚C
LM193/LM193A	−55˚C to +125˚C
LM2903	−40˚C to +85˚C
Storage Temperature Range	−65˚C to +150˚C
Lead Temperature	
(Soldering, 10 seconds)	+260˚C
Soldering Information	
Dual-In-Line Package	
Soldering (10 seconds)	260˚C
Small Outline Package	215˚C
Vapor Phase (60 seconds)	
Infrared (15 seconds)	220˚C

See AN-450 "Surface Mounting Methods and Their Effect on Product Reliability" for other methods of soldering surface mount devices.

ESD rating	
(1.5 kΩ in series with 100 pF)	1300V

Electrical Characteristics

(V^+=5V, T_A = 25˚C, unless otherwise stated)

Parameter	Conditions		LM193A			Units
			Min	Typ	Max	
Input Offset Voltage	(Note 9)			1.0	2.0	mV
Input Bias Current	I_{IN}(+) or I_{IN}(−) with Output In Linear Range, V_{CM} = 0V (Note 5)			25	100	nA
Input Offset Current	I_{IN}(+)−I_{IN}(−) V_{CM} = 0V			3.0	25	nA
Input Common Mode Voltage Range	V+ = 30V (Note 6)		0		V^+−1.5	V
Supply Current	R_L=∞	V^+=5V		0.4	1	mA
		V^+=36V		1	2.5	mA
Voltage Gain	R_L≥15 kΩ, V^+=15V V_O = 1V to 11V		50	200		V/mV
Large Signal Response Time	V_{IN}=TTL Logic Swing, V_{REF}=1.4V V_{RL}=5V, R_L=5.1 kΩ			300		ns
Response Time	V_{RL}=5V, R_L=5.1 kΩ (Note 7)			1.3		μs
Output Sink Current	V_{IN}(−)=1V, V_{IN}(+)=0, V_O≈1.5V		6.0	16		mA
Saturation Voltage	V_{IN}(−)=1V, V_{IN}(+)=0, I_{SINK}≤4 mA			250	400	mV
Output Leakage Current	V_{IN}(−)=0, V_{IN}(+)=1V, V_O=5V			0.1		nA

Electrical Characteristics

(V^+=5V, T_A = 25˚C, unless otherwise stated)

Parameter	Conditions	LM193			LM293, LM393			LM2903			Units
		Min	Typ	Max	Min	Typ	Max	Min	Typ	Max	
Input Offset Voltage	(Note 9)		1.0	5.0		1.0	5.0		2.0	7.0	mV
Input Bias Current	I_{IN}(+) or I_{IN}(−) with Output In Linear Range, V_{CM} = 0V (Note 5)		25	100		25	250		25	250	nA
Input Offset Current	I_{IN}(+)−I_{IN}(−) V_{CM} = 0V		3.0	25		5.0	50		5.0	50	nA
Input Common Mode Voltage Range	V+ = 30V (Note 6)	0		V+−1.5	0		V+−1.5	0		V+−1.5	V

Electrical Characteristics (Continued)

(V^+=5V, T_A = 25˚C, unless otherwise stated)

Parameter	Conditions		LM193			LM293, LM393			LM2903			Units
			Min	Typ	Max	Min	Typ	Max	Min	Typ	Max	
Supply Current	R_L=∞	V^+=5V		0.4	1		0.4	1		0.4	1.0	mA
		V^+=36V		1	2.5		1	2.5		1	2.5	mA
Voltage Gain	R_L≥15 kΩ, V^+=15V V_O = 1V to 11V		50	200		50	200		25	100		V/mV
Large Signal Response Time	V_{IN}=TTL Logic Swing, V_{REF}=1.4V V_{RL}=5V, R_L=5.1 kΩ			300			300			300		ns
Response Time	V_{RL}=5V, R_L=5.1 kΩ (Note 7)			1.3			1.3			1.5		µs
Output Sink Current	$V_{IN}(-)$=1V, $V_{IN}(+)$=0, V_O≤1.5V		6.0	16		6.0	16		6.0	16		mA
Saturation Voltage	$V_{IN}(-)$=1V, $V_{IN}(+)$=0, I_{SINK}≤4 mA			250	400		250	400		250	400	mV
Output Leakage Current	$V_{IN}(-)$=0, $V_{IN}(+)$=1V, V_O=5V			0.1			0.1			0.1		nA

Electrical Characteristics

(V+ = 5V) (Note 4)

Parameter	Conditions	LM193A			Units
		Min	Typ	Max	
Input Offset Voltage	(Note 9)			4.0	mV
Input Offset Current	$I_{IN(+)}-I_{IN(-)}$, V_{CM}=0V			100	nA
Input Bias Current	$I_{IN}(+)$ or $I_{IN}(-)$ with Output in Linear Range, V_{CM}=0V (Note 5)			300	nA
Input Common Mode Voltage Range	V^+=30V (Note 6)	0		V^+–2.0	V
Saturation Voltage	$V_{IN}(-)$=1V, $V_{IN}(+)$=0, I_{SINK}≤4 mA			700	mV
Output Leakage Current	$V_{IN}(-)$=0, $V_{IN(+)}$=1V, V_O=30V			1.0	µA
Differential Input Voltage	Keep All V_{IN}'s≥0V (or V^-, if Used), (Note 8)			36	V

Electrical Characteristics

(V+ = 5V) (Note 4)

Parameter	Conditions	LM193			LM293, LM393			LM2903			Units
		Min	Typ	Max	Min	Typ	Max	Min	Typ	Max	
Input Offset Voltage	(Note 9)			9			9		9	15	mV
Input Offset Current	$I_{IN(+)}-I_{IN(-)}$, V_{CM}=0V			100			150		50	200	nA
Input Bias Current	$I_{IN}(+)$ or $I_{IN}(-)$ with Output in Linear Range, V_{CM}=0V (Note 5)			300			400		200	500	nA
Input Common Mode Voltage Range	V^+=30V (Note 6)	0		V^+–2.0	0		V^+–2.0	0		V^+–2.0	V
Saturation Voltage	$V_{IN}(-)$=1V, $V_{IN}(+)$=0, I_{SINK}≤4 mA			700			700		400	700	mV
Output Leakage Current	$V_{IN}(-)$=0, $V_{IN(+)}$=1V, V_O=30V			1.0			1.0			1.0	µA
Differential Input Voltage	Keep All V_{IN}'s≥0V (or V^-, if Used), (Note 8)			36			36			36	V

Note 1: For operating at high temperatures, the LM393 and LM2903 must be derated based on a 125˚C maximum junction temperature and a thermal resistance of 170˚C/W which applies for the device soldered in a printed circuit board, operating in a still air ambient. The LM193/LM193A/LM293 must be derated based on a 150˚C maximum junction temperature. The low bias dissipation and the "ON-OFF" characteristic of the outputs keeps the chip dissipation very small (P_D≤100 mW), provided the output transistors are allowed to saturate.

Note 2: Short circuits from the output to V^+ can cause excessive heating and eventual destruction. When considering short circuits to ground, the maximum output current is approximately 20 mA independent of the magnitude of V^+.

Note 3: This input current will only exist when the voltage at any of the input leads is driven negative. It is due to the collector-base junction of the input PNP transistors becoming forward biased and thereby acting as input diode clamps. In addition to this diode action, there is also lateral NPN parasitic transistor action

Electrical Characteristics (Continued)

on the IC chip. This transistor action can cause the output voltages of the comparators to go to the V^+ voltage level (or to ground for a large overdrive) for the time duration that an input is driven negative. This is not destructive and normal output states will re-establish when the input voltage, which was negative, again returns to a value greater than –0.3V.

Note 4: These specifications are limited to $-55^\circ C \leq T_A \leq +125^\circ C$, for the LM193/LM193A. With the LM293 all temperature specifications are limited to $-25^\circ C \leq T_A \leq +85^\circ C$ and the LM393 temperature specifications are limited to $0^\circ C \leq T_A \leq +70^\circ C$. The LM2903 is limited to $-40^\circ C \leq T_A \leq +85^\circ C$.

Note 5: The direction of the input current is out of the IC due to the PNP input stage. This current is essentially constant, independent of the state of the output so no loading change exists on the reference or input lines.

Note 6: The input common-mode voltage or either input signal voltage should not be allowed to go negative by more than 0.3V. The upper end of the common-mode voltage range is V^+–1.5V at 25˚C, but either or both inputs can go to 36V without damage, independent of the magnitude of V^+.

Note 7: The response time specified is for a 100 mV input step with 5 mV overdrive. For larger overdrive signals 300 ns can be obtained, see typical performance characteristics section.

Note 8: Positive excursions of input voltage may exceed the power supply level. As long as the other voltage remains within the common-mode range, the comparator will provide a proper output state. The low input voltage state must not be less than –0.3V (or 0.3V below the magnitude of the negative power supply, if used).

Note 9: At output switch point, $V_O \simeq 1.4V$, $R_S = 0\Omega$ with V^+ from 5V to 30V; and over the full input common-mode range (0V to V^+–1.5V), at 25˚C.

Note 10: Refer to RETS193AX for LM193AH military specifications and to RETS193X for LM193H military specifications.

Ordering Information

Package	Temperature Range	Part Number	NSC Drawing
8-Pin Metal Can	–55˚C to 125˚C	LM193H*	H08C
		LM193H/883	
		LM193H-MLS	
		LM193AH-MLS	
		LM193AH-QMLV**	
		LM193AH	
		LM193AH/883	
	–25˚C to 85˚C	LM293H	
	0˚C to 70˚C	LM393H	
8-Pin Ceramic DIP	–55˚C to 125˚C	LM193J/883*	J08A
		LM193AJ/883	
		LM193AJ-QMLV**	
		LM193AJ-MLS	
8-Pin Molded DIP	0˚C to 70˚C	LM393N	N08E
	–40˚C to 85˚C	LM2903N	
8-Pin SOIC	0˚C to 70˚C	LM393M	M08A
		LM393MX	
	–40˚C to 85˚C	LM2903M	
		LM2903MX	
8-Bump (12 mils) micro SMD	0˚C to 70˚C	LM393TL	TLA08AAA
		LM393TLX	
	–40˚C to 85˚C	LM2903ITL	
		LM2903ITLX	

Note: * Also available per LM38510/11202

Note: ** See STD Mil DWG 5962-94526

Typical Performance Characteristics LM193/LM293/LM393, LM193A

Supply Current

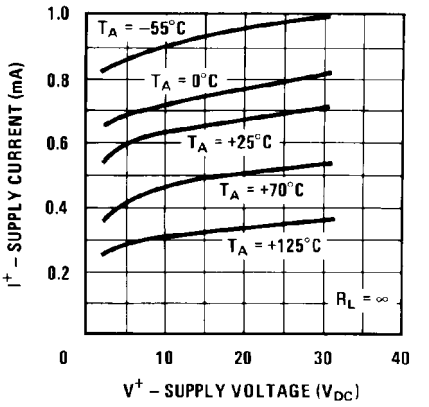

00570925

Input Current

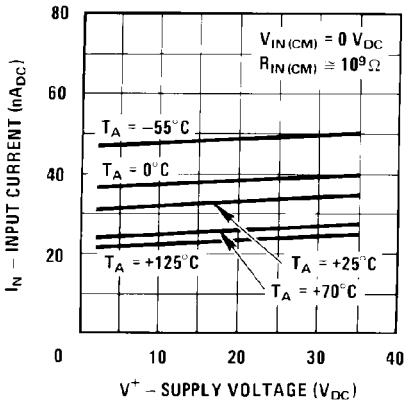

00570926

Output Saturation Voltage

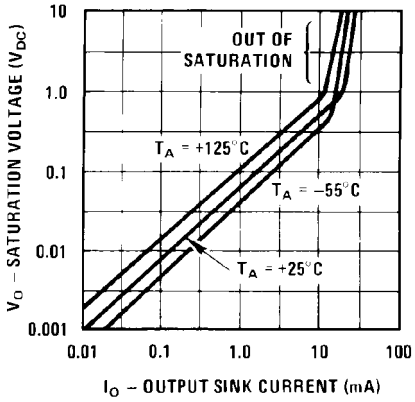

00570927

Response Time for Various Input Overdrives—Negative Transition

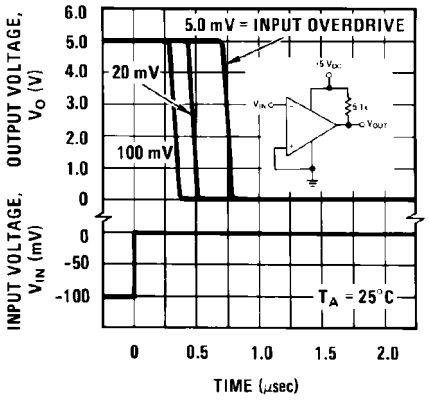

00570928

Response Time for Various Input Overdrives—Positive Transition

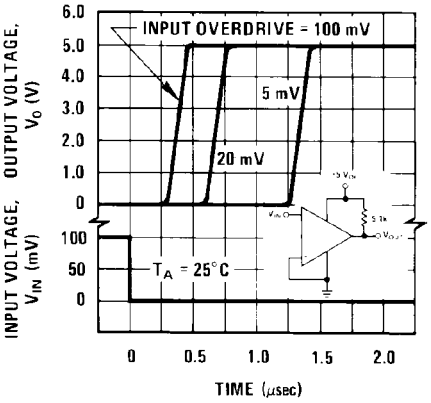

00570929

Typical Performance Characteristics LM2903

Supply Current

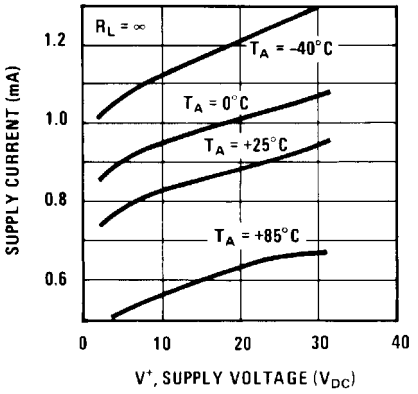

00570930

Input Current

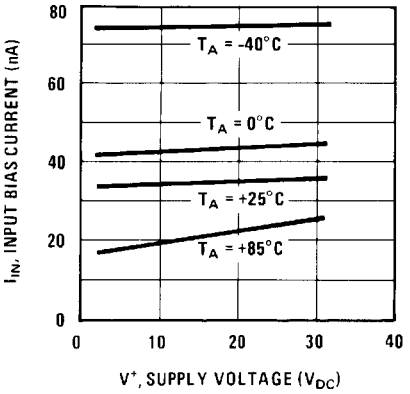

00570931

Output Saturation Voltage

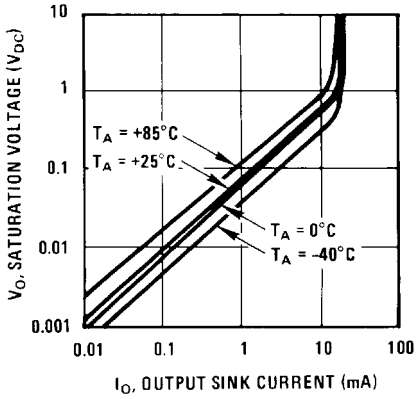

00570932

Response Time for Various Input Overdrives—Negative Transition

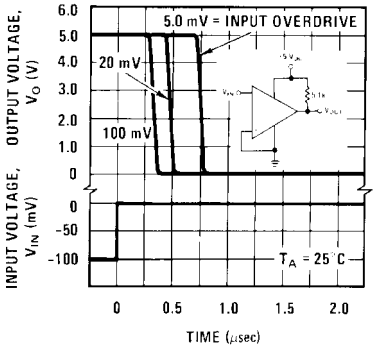

00570933

Response Time for Various Input Overdrives—Positive Transition

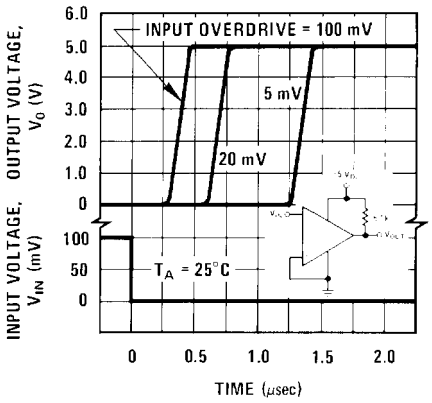

00570934

Application Hints

The LM193 series are high gain, wide bandwidth devices which, like most comparators, can easily oscillate if the output lead is inadvertently allowed to capacitively couple to the inputs via stray capacitance. This shows up only during the output voltage transition intervals as the comparator change states. Power supply bypassing is not required to solve this problem. Standard PC board layout is helpful as it reduces stray input-output coupling. Reducing the input resistors to < 10 kΩ reduces the feedback signal levels and finally, adding even a small amount (1.0 to 10 mV) of positive feedback (hysteresis) causes such a rapid transition that oscillations due to stray feedback are not possible. Simply socketing the IC and attaching resistors to the pins will cause input-output oscillations during the small transition intervals unless hysteresis is used. If the input signal is a pulse waveform, with relatively fast rise and fall times, hysteresis is not required.

All input pins of any unused comparators should be tied to the negative supply.

The bias network of the LM193 series establishes a drain current which is independent of the magnitude of the power supply voltage over the range of from 2.0 V_{DC} to 30 V_{DC}.

It is usually unnecessary to use a bypass capacitor across the power supply line.

The differential input voltage may be larger than V^+ without damaging the device (Note 8). Protection should be provided to prevent the input voltages from going negative more than –0.3 V_{DC} (at 25°C). An input clamp diode can be used as shown in the applications section.

The output of the LM193 series is the uncommitted collector of a grounded-emitter NPN output transistor. Many collectors can be tied together to provide an output OR'ing function. An output pull-up resistor can be connected to any available power supply voltage within the permitted supply voltage range and there is no restriction on this voltage due to the magnitude of the voltage which is applied to the V^+ terminal of the LM193 package. The output can also be used as a simple SPST switch to ground (when a pull-up resistor is not used). The amount of current which the output device can sink is limited by the drive available (which is independent of V^+) and the β of this device. When the maximum current limit is reached (approximately 16mA), the output transistor will come out of saturation and the output voltage will rise very rapidly. The output saturation voltage is limited by the approximately 60Ω r_{SAT} of the output transistor. The low offset voltage of the output transistor (1.0mV) allows the output to clamp essentially to ground level for small load currents.

Typical Applications (V^+=5.0 V_{DC})

Basic Comparator

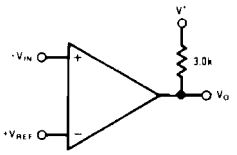

00570935

Driving CMOS

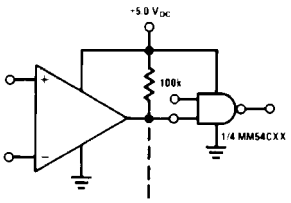

00570936

Driving TTL

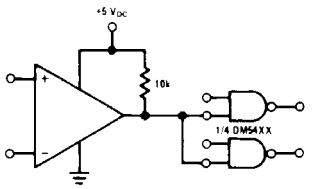

00570937

Squarewave Oscillator

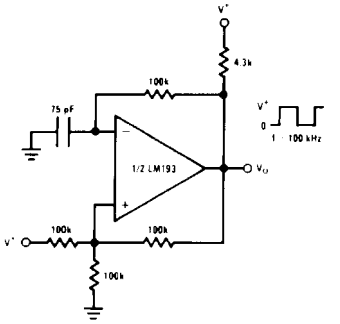

00570938

Pulse Generator

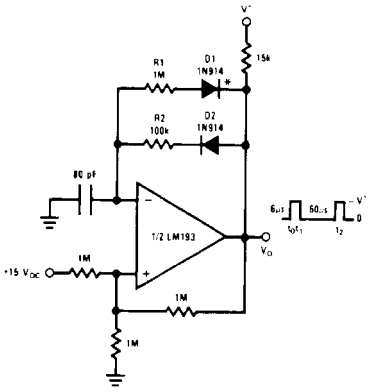

00570939

Crystal Controlled Oscillator

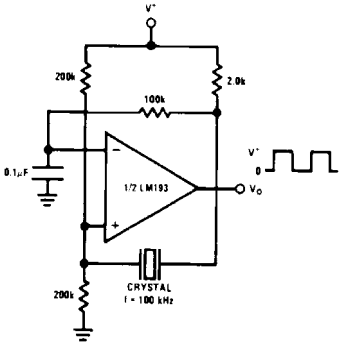

00570940

* For large ratios of R1/R2, D1 can be omitted.

Typical Applications (V^+=5.0 V_{DC}) (Continued)

Two-Decade High Frequency VCO

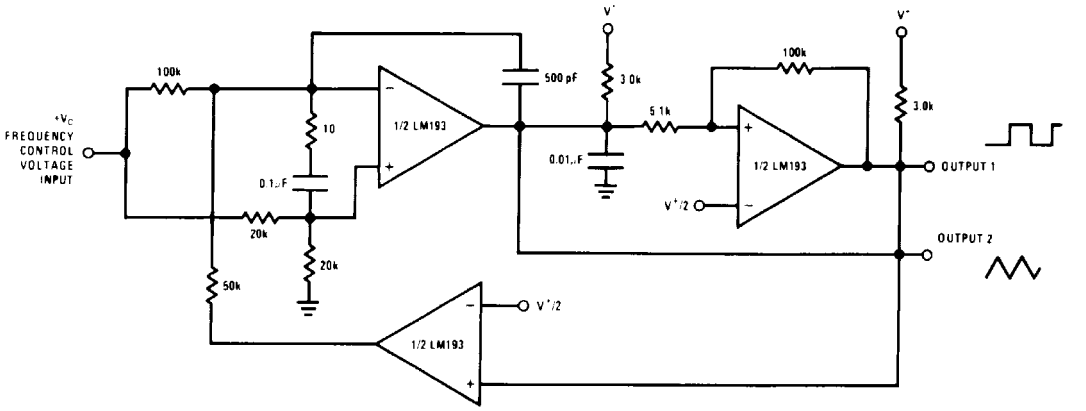

00570941

V* = +30 V_{DC}
+250 $mV_{DC} \leq V_C \leq$ +50 V_{DC}
700Hz $\leq f_o \leq$ 100kHz

Basic Comparator

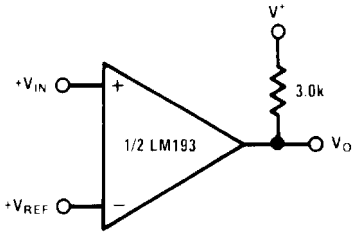

00570906

Non-Inverting Comparator with Hysteresis

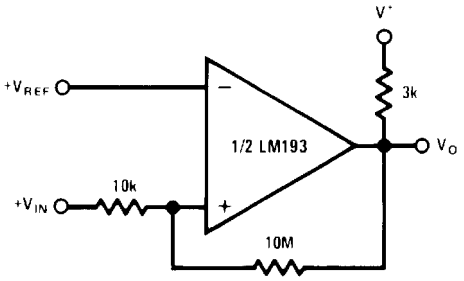

00570909

Inverting Comparator with Hysteresis

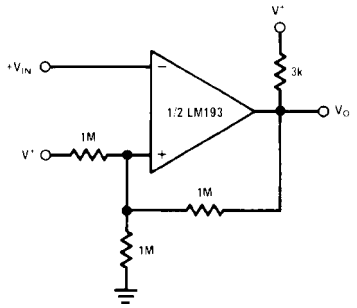

00570910

Output Strobing

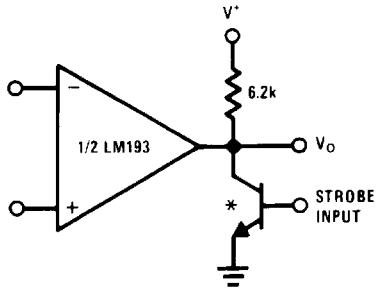

* OR LOGIC GATE
WITHOUT PULL-UP RESISTOR

00570911

Typical Applications (V^+=5.0 V_{DC}) (Continued)

AND Gate

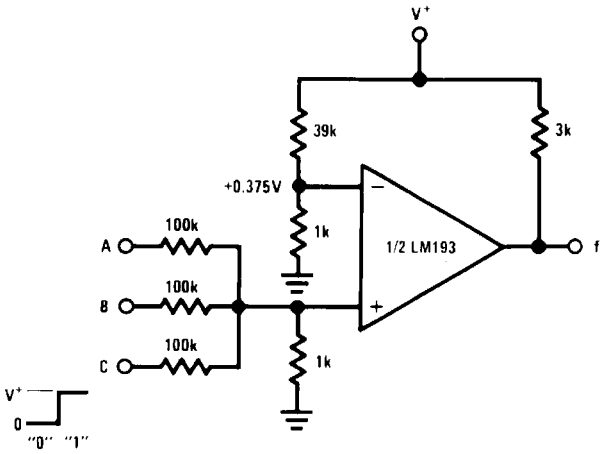

00570912

OR Gate

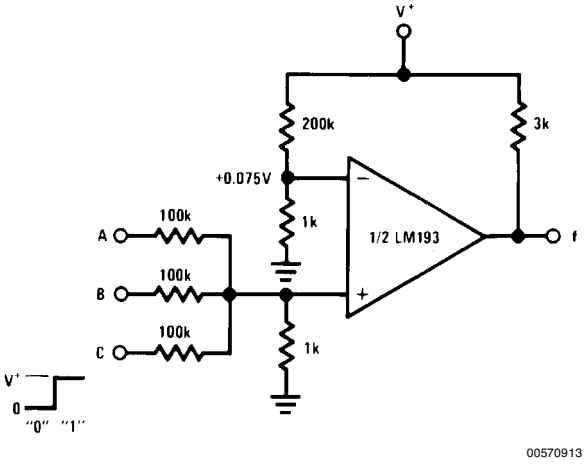

00570913

Large Fan-in AND Gate

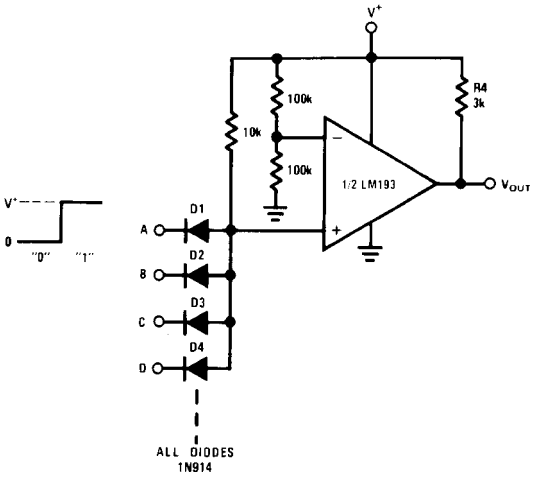

00570914

Limit Comparator

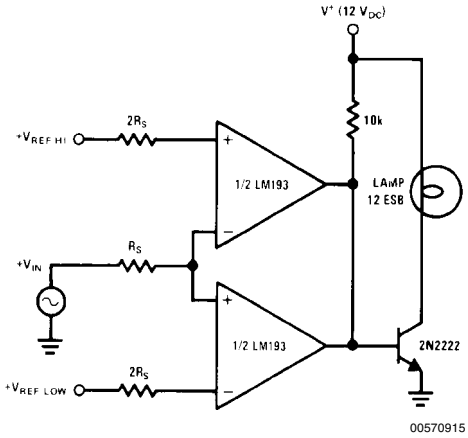

00570915

Comparing Input Voltages of Opposite Polarity

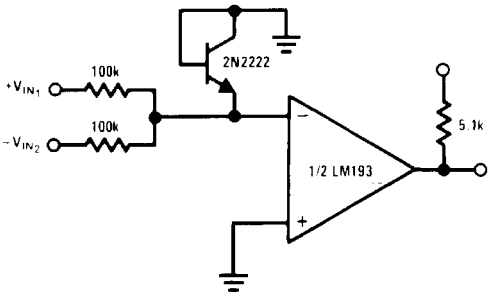

00570916

ORing the Outputs

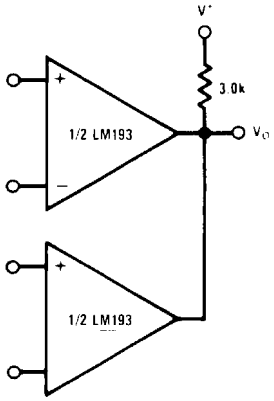

00570917

Typical Applications (V^+=5.0 V_{DC}) (Continued)

Zero Crossing Detector (Single Power Supply)

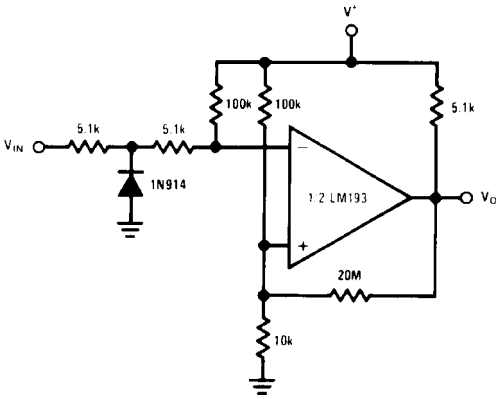

00570921

One-Shot Multivibrator

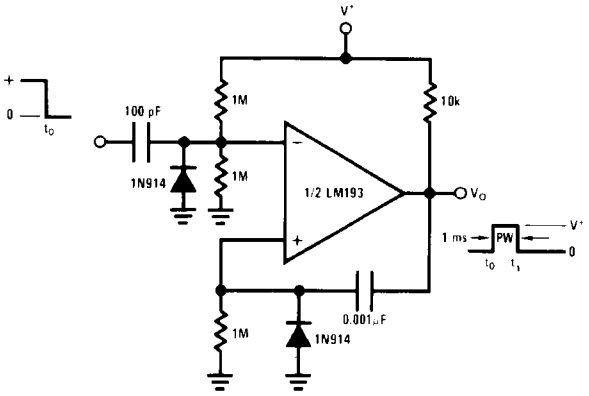

00570922

Bi-Stable Multivibrator

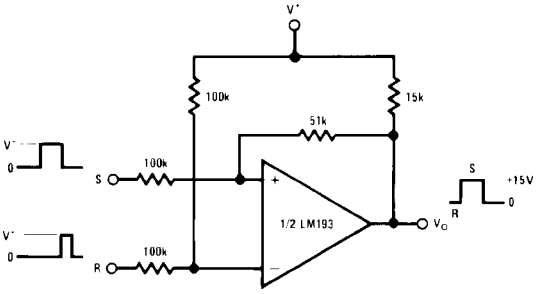

00570924

One-Shot Multivibrator with Input Lock Out

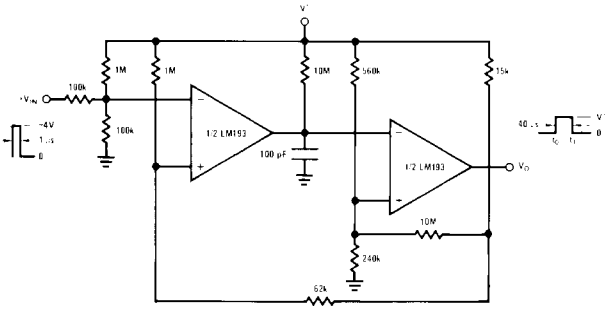

00570923

Zero Crossing Detector

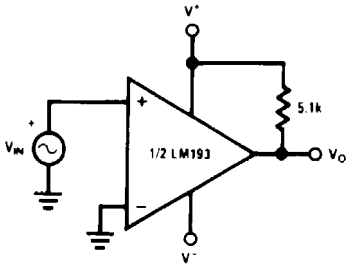

00570943

Comparator With a Negative Reference

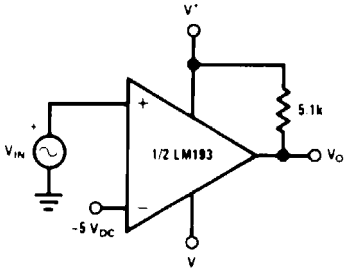

00570944

Typical Applications (V^+=5.0 V_{DC}) (Continued)

Time Delay Generator

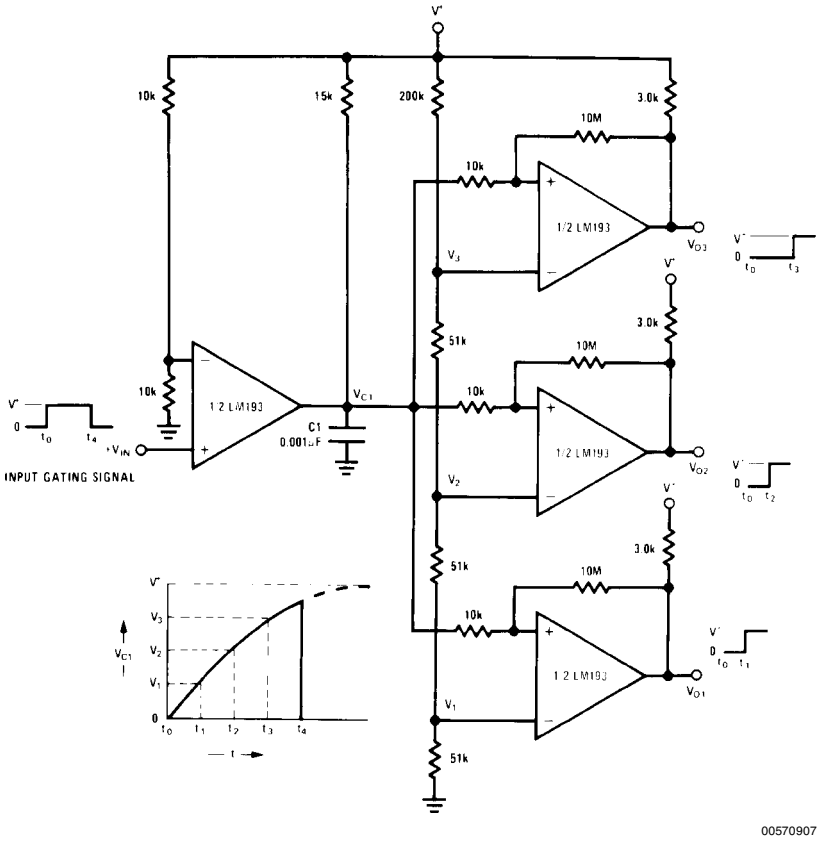

00570907

Split-Supply Applications (V^+=+15 V_{DC} and V^-=−15 V_{DC})

MOS Clock Driver

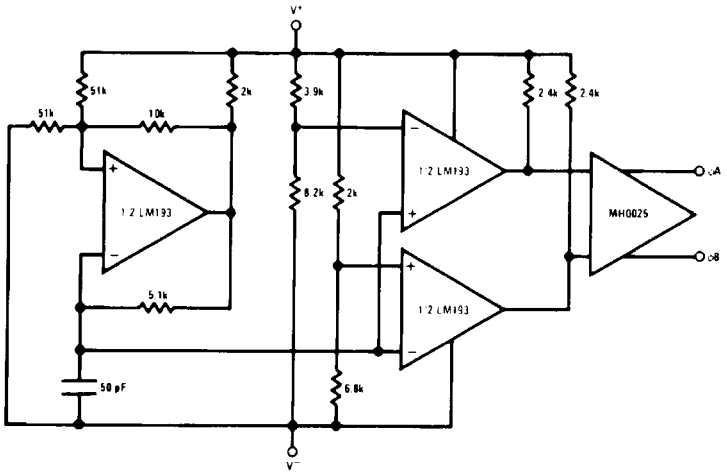

00570942

Physical Dimensions inches (millimeters) unless otherwise noted

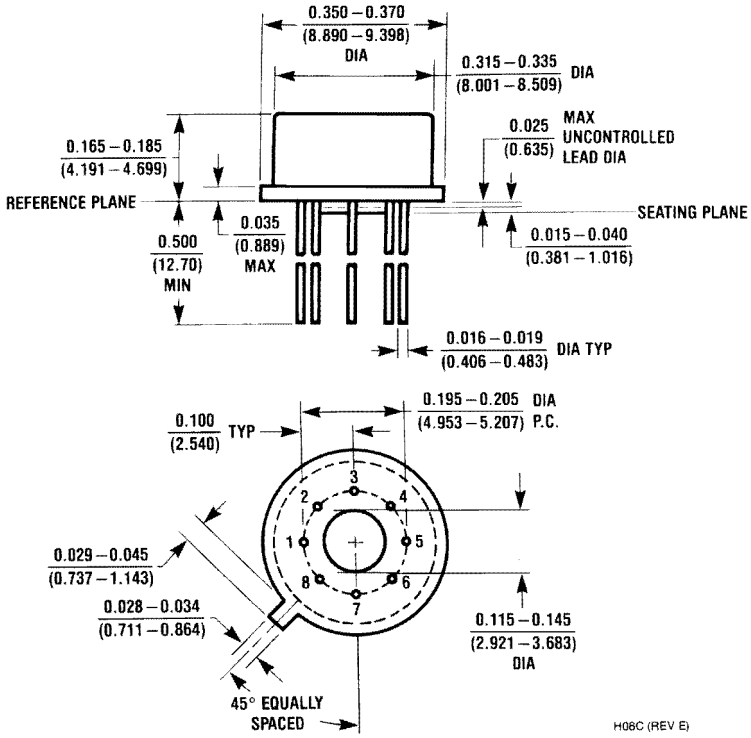

Metal Can Package (H)
NS Package Number H08C

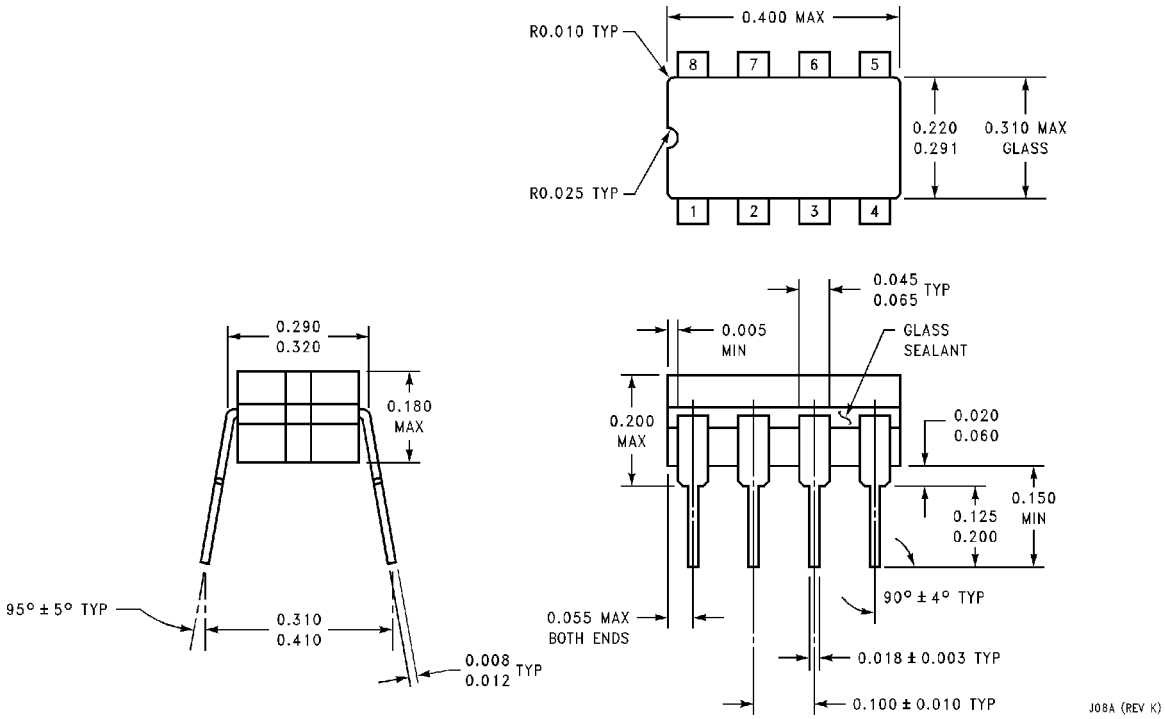

Ceramic Dual-In-Line Package
NS Package Number J08A

Physical Dimensions inches (millimeters) unless otherwise noted (Continued)

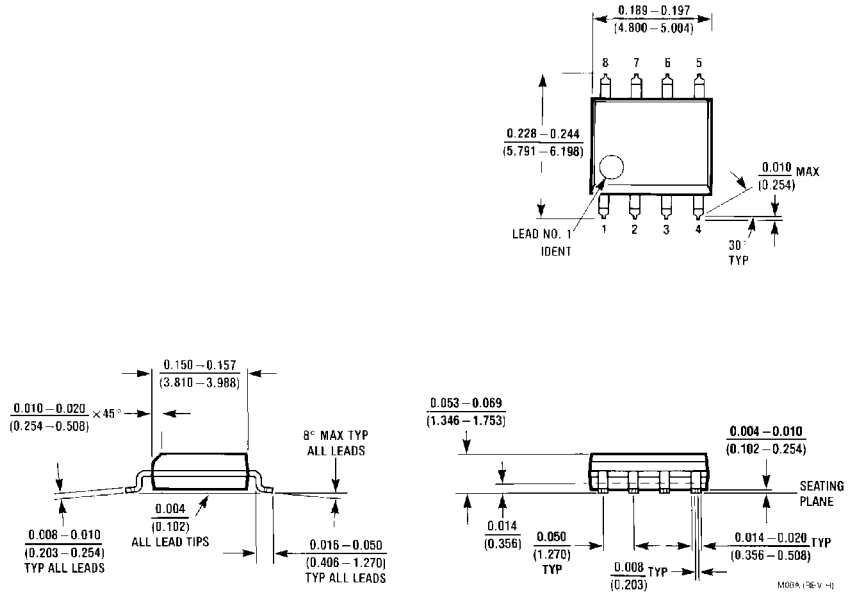

SOIC Package
NS Package Number M08A

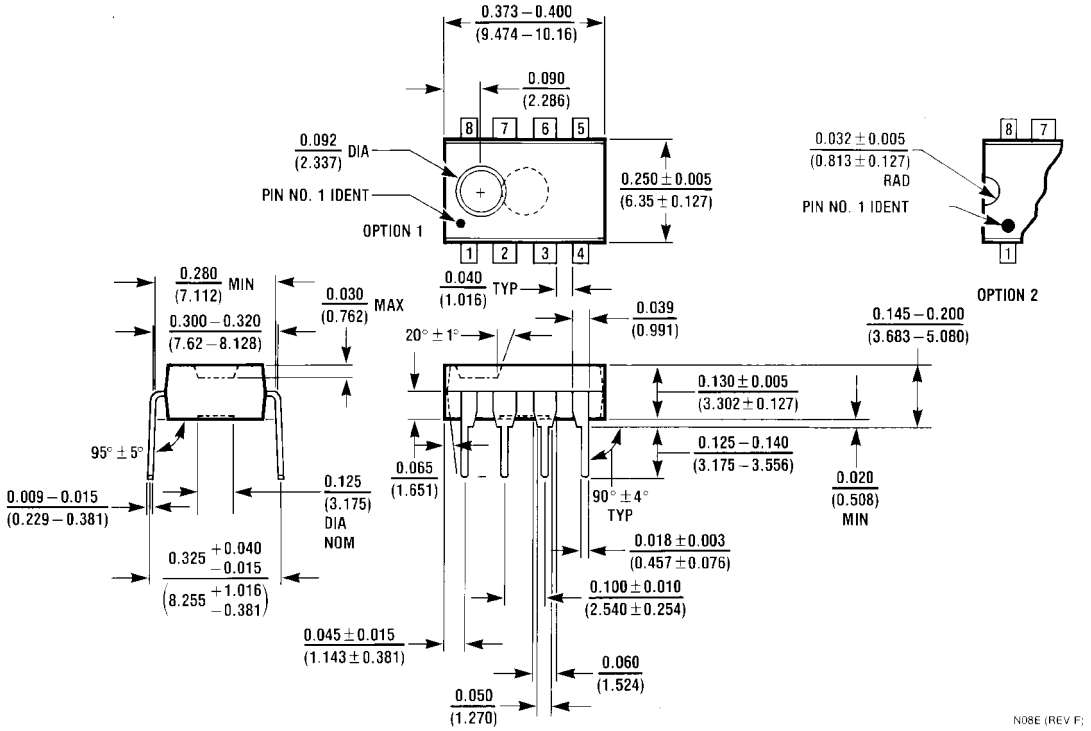

Molded Dual-In-Line Package (N)
NS Package N08E

Physical Dimensions inches (millimeters) unless otherwise noted (Continued)

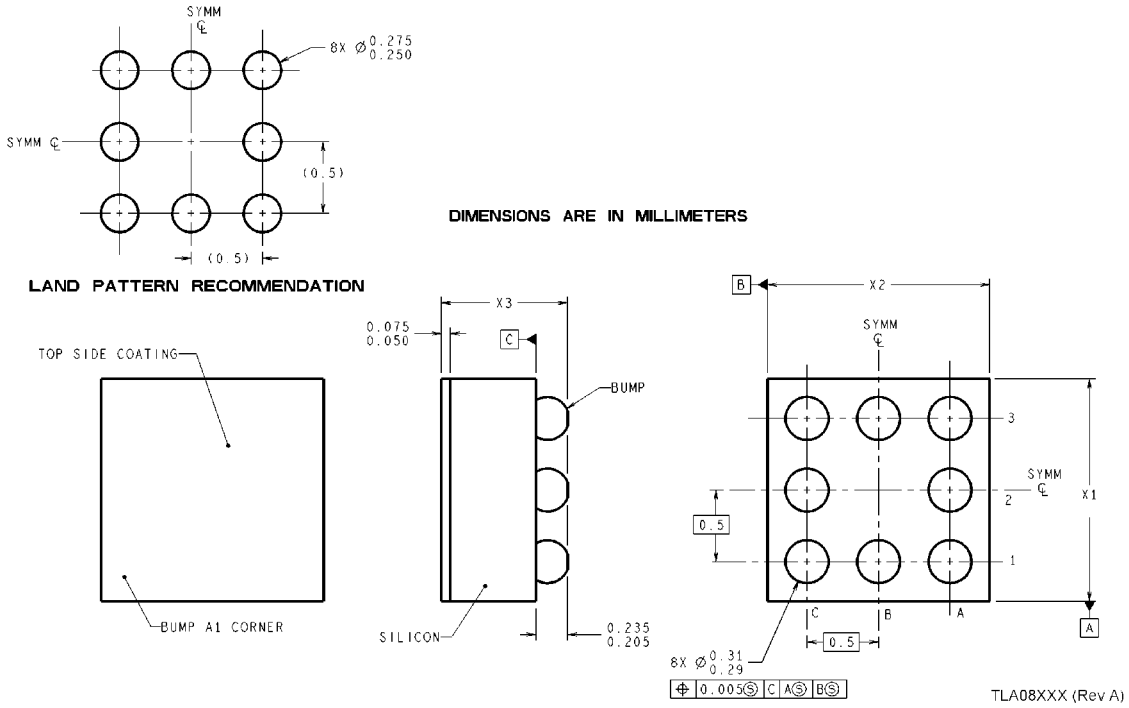

NOTE: UNLESS OTHERWISE SPECIFIED

1. EPOXY COATING
2. 63Sn/37Pb EUTECTIC BUMP
3. RECOMMEND NON-SOLDER MASK DEFINED LANDING PAD.
4. PIN A1 IS ESTABLISHED BY LOWER LEFT CORNER WITH RESPECT TO TEXT ORIENTATION REMAINING PINS ARE NUMBERED COUNTERCLOCKWISE.
5. XXX IN DRAWING NUMBER REPRESENTS PACKAGE SIZE VARIATION WHERE X_1 IS PACKAGE WIDTH, X_2 IS PACKAGE LENGTH AND X_3 IS PACKAGE HEIGHT.
6. REFERENCE JEDEC REGISTRATION MO-211, VARIATION BC.

8-Bump (12 mil) micro SMD Package
NS Package TLA08AAA
X_1 = 1.514mm X_2 = 1.514mm X_3 = 0.600mm

LIFE SUPPORT POLICY

NATIONAL'S PRODUCTS ARE NOT AUTHORIZED FOR USE AS CRITICAL COMPONENTS IN LIFE SUPPORT DEVICES OR SYSTEMS WITHOUT THE EXPRESS WRITTEN APPROVAL OF THE PRESIDENT AND GENERAL COUNSEL OF NATIONAL SEMICONDUCTOR CORPORATION. As used herein:

1. Life support devices or systems are devices or systems which, (a) are intended for surgical implant into the body, or (b) support or sustain life, and whose failure to perform when properly used in accordance with instructions for use provided in the labeling, can be reasonably expected to result in a significant injury to the user.
2. A critical component is any component of a life support device or system whose failure to perform can be reasonably expected to cause the failure of the life support device or system, or to affect its safety or effectiveness.

National Semiconductor Corporation
Americas
Email: support@nsc.com

www.national.com

National Semiconductor Europe
Fax: +49 (0) 180-530 85 86
Email: europe.support@nsc.com
Deutsch Tel: +49 (0) 69 9508 6208
English Tel: +44 (0) 870 24 0 2171
Français Tel: +33 (0) 1 41 91 8790

National Semiconductor Asia Pacific Customer Response Group
Tel: 65-2544466
Fax: 65-2504466
Email: ap.support@nsc.com

National Semiconductor Japan Ltd.
Tel: 81-3-5639-7560
Fax: 81-3-5639-7507