SIEMENS

LH 1485

OPTICALLY COUPLED HIGH SPEED MOSFET DRIVERS OPTOCOUPLER

FEATURES

- **Fast Turn On**
- **Fast Turn Off**
- **Low Input Current**
- **Isolation Test Voltage, 5300 VAC_{RMS}**

APPLICATIONS

- **Motor Drive Controls**
- **IGBT-predrivers**
- **AC/DC Power Inverters**

DESCRIPTION

The IL485 is a photovoltatic generator (optically coupled) designed to drive highly capacitive loads such as the gate of a power MOSFET transistor and at the same time provide isolation and floating voltage supply capability. The coupler consists of a GaAlAs light emitting diode as input control and a custom photo IC chip with photodiode array (PDA) as output device. When the LED is turned on, the emitted light produces a voltage in the PDA. The output of the PDA is used to drive the gate of a power MOSFET. The photo IC chip contains additional circuitry to enhance the switching speeds, (both turn on turn off). The optocoupler is packaged in a 6 pin DIP.

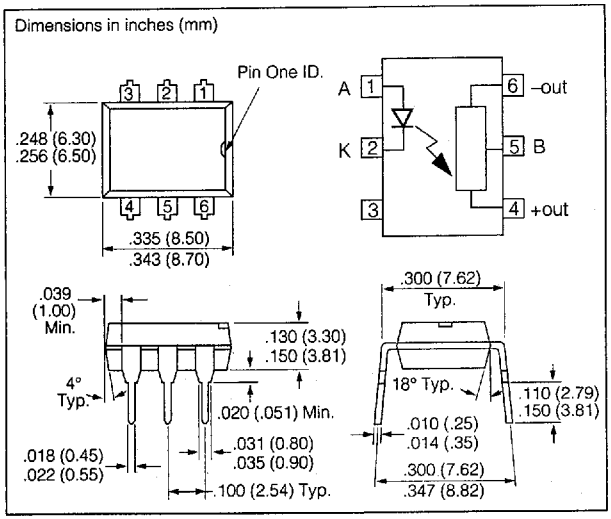

Maximum Ratings

Emitter

Reverse Voltage ..... 4 V
Forward Current ..... 60 mA
Peak Forward Current ..... 600 mA
Power Dissipation ..... 100 mW
Thermal Resistance ..... 700 °C/W

Detector

Breakdown Voltage (pin 5 to 6) ..... 300 V
Peak Input Current (pin 5 to 4) ..... 50 mA
Reverse Current (pin 5 to 6, V=100 V) ..... 200 nA
Power Dissipation (pin 5 to 4) ..... 150 mW

Package

Insulation Thickness between Emitter and Detector ..... ≥0.4 mm
Isolation Test Voltage (1 sec.) ..... 5300 VAC_{RMS}
Isolation Resistance
V_{IO}=500 V, T_A=25°C ..... $\geq 10^{12}\ \Omega$
V_{IO}=500 V, T_A=100°C ..... $\geq 10^{11}\ \Omega$
Comparative Tracking Index per
DIN IEC 112/VDE 303, Part 1 ..... ≥175
Total Power Dissipation ..... 250 mW
Storage Temperature Range ..... –55°C to +150°C
Operating Temperature Range ..... –55°C to +100°C
Junction Temperature ..... 100°C
Soldering Temperature (max. 10 sec.,
dip soldering distance to seating plane >1.5 mm) ..... 260°C

Electrical Characteristics

Parameter		Symbol	Min.	Typ.	Max.	Unit	Condition
Input — Emitter							
LED Forward Voltage		V_F	0.9	1.5	2.1	V	I_F=10 mA
LED Junction Capacitance		C_J		25		pF	V_R=0 V, f=1 MHz
MOSFET Driver Output with External Biasing (see Figure 1 and Figure 3)							
Zener Voltage (pin 4 to 6)		V_Z		13		V	I_{ZT}=10 µA
Dynamic Output Voltage (pin 4 to 6)		V_{OUT}	9	11		V	C_L=2000 pF, V_B=20 V, I_F=10 mA
Dynamic Output Current (pin 4 to 6)		I_{OUT}		5		mA	C_L=2000 pF, V_B=20 V, I_F=10 mA
				15			C_L=2000 pF, V_B=20 V, I_F=40 mA
Dynamic Output Resistance	Sourcing (pin 4)	R_{OUT}		300		Ω	I_F=10 mA
	Sinking (pin 4)			20			
Turn-on Time		t_{ON}		3.5	5	µs	C_L=2000 pF, I_F=40 mA Measure at V_{OUT}=5 V, V_B=20 V
Turn-off Time		t_{OFF}		3.5	5	µs	C_L=2000 pF, I_F=40 mA Measure at V_{OUT}=2 V, V_B=20 V
MOSFET Driver Output without External Biasing (see Figure 2 and Figure 3)							
Output Open Circuit Voltage (pin 4 to 6)		V_{OC}	8	10		V	I_F=10 mA
Output Short Circuit Current (pin 4 to 6)		I_{SC}	2.1	4		µA	I_F=10 mA
			8.4	16			
Dynamic Output Resistance Sinking (pin 4)		R_{OUT}		20		Ω	I_F=10 mA
Turn-on Time		t_{ON}		650	1000	µs	C_L=2000 pF (see Figure 3) Measure at V_{OUT}=5 V, I_F=40 mA
Turn-off Time		t_{OFF}		3	5	µs	C_L=2000 pF (seeFigure 3) Measure at V_{OUT}=2 V, I_F=40 mA
MOSFET Driver Output Switching Speed (see Figure 3, Figure 4, Figure 5)							
Rise time		t_R		500		ns	M1 Cgs=2000 pF, V_S=50 V Measure at 90%–10% M1 V_{DS} (see Figure 4)
Turn-on Time		t_{ON}		3.5		µs	
Fall time		t_F		300		ns	
Turn-off Time		t_{OFF}		3.5		µs	
Package Isolation Characteristics							
Input-Output CMRR		dv/dt		15 kV		V/µs	V_{CM}=1000 V
Coupling Capacitance		C_{IO}		1		pF	f=1 MHz

Figure 1. Switching time measurement with external voltage bias

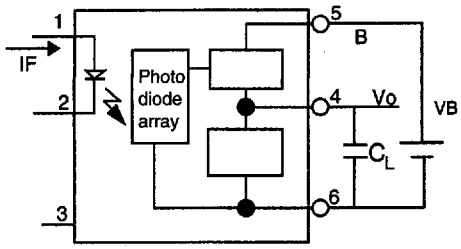

Figure 2. Switching time measurement

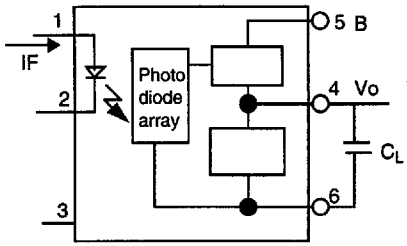

Figure 3. IL485 connected in AC load switching configuration

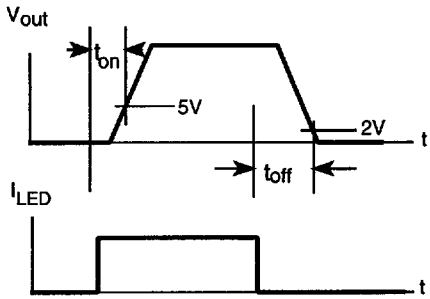

Figure 4. Switching time measurement without voltage bias

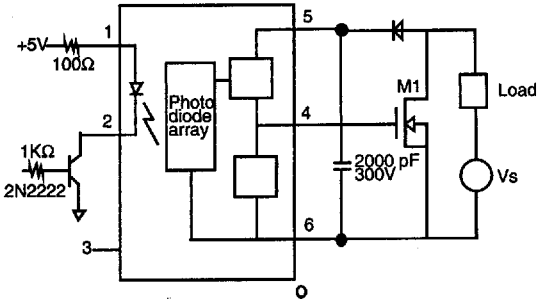

Figure 5. IL485 connected in DC load switching configuration

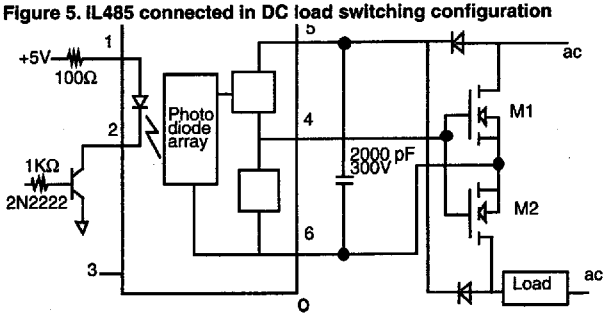

Package Outline Dimensions

Figure 1. 6-pin DIP

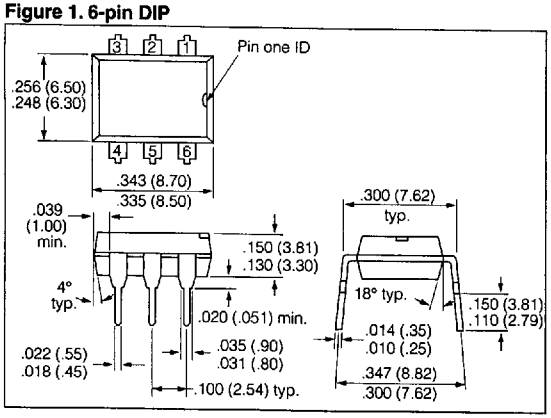

Figure 2. 6-pin, SMD

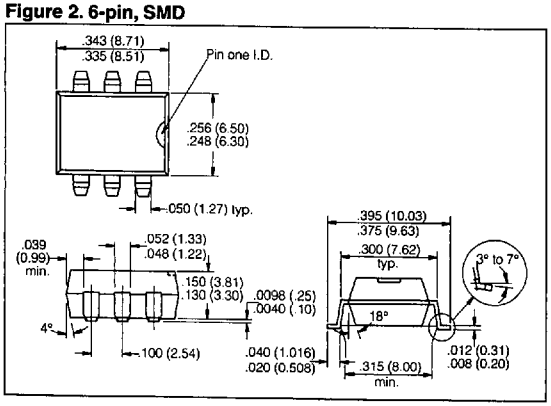

Figure 3. 8-pin DIP

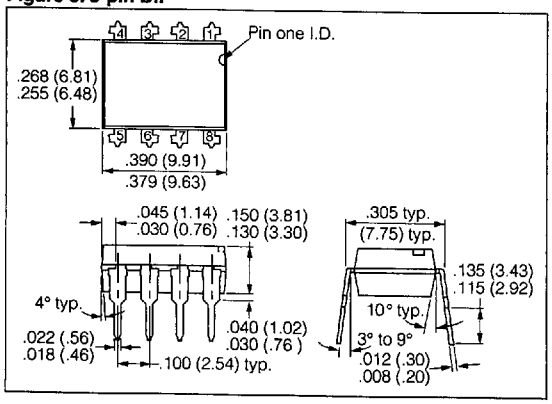

Figure 4. 8-pin, SMD

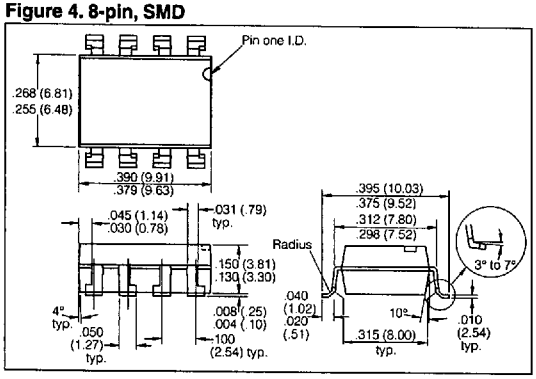

Figure 5. 8-pin SOP (PCMCIA)

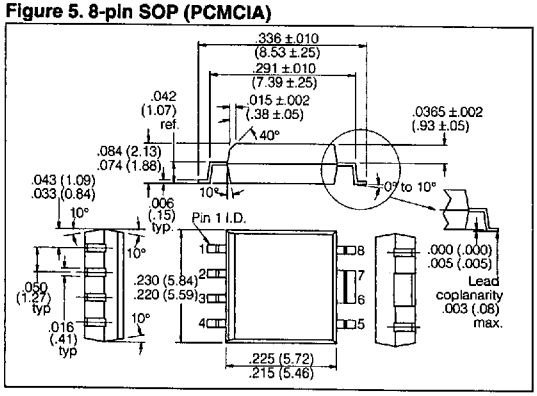

Figure 6. 18-pin SOP (PCMCIA)

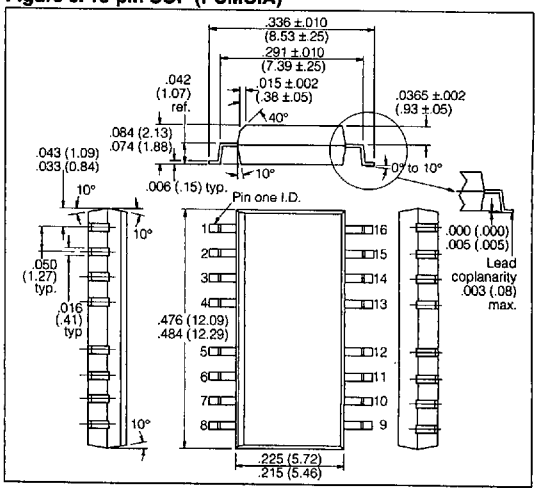

Solid State Relays 6