LD29150

1.5 A, very low drop voltage regulators

Datasheet - production data

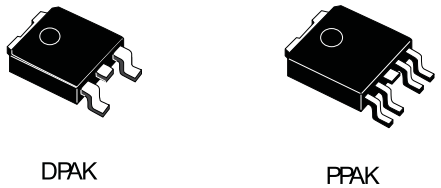

Features

- Very low dropout voltage (typ. 0.4 at 1.5 A)
- Guaranteed output current up to 1.5 A
- Fixed and adjustable output voltage (± 1% at 25 °C)
- Internal current and thermal limit
- Logic controlled electronic shutdown available in PPAK

Description

The LD29150 is a high current, high accuracy, low-dropout voltage regulator series. These regulators feature 400 mV dropout voltage and very low ground current. Designed for high current loads, these devices are also used in lower current, extremely low dropout-critical systems, where their tiny dropout voltage and ground current values are important attributes. Typical applications are in power supply switching post regulation, series power supply for monitors, series power supply for VCRs and TVs, computer systems and battery powered systems.

Table 1. Device summary

Order codes		Output voltages
DPAK	PPAK	
LD29150DT18R		1.8 V
LD29150DT25R		2.5 V
LD29150DT33R		3.3 V
LD29150DT50R	LD29150PT50R	5.0 V
	LD29150PTR	ADJ

This is information on a product in full production. www.st.com

Contents

1 Diagram 3

2 Pin configuration 4

3 Typical application 5

4 Maximum ratings 6

5 Electrical characteristics 7

6 Typical characteristics 12

7 Package information 15

7.1 DPAK package information 15

7.2 PPAK package information 18

8 Packaging information 20

8.1 PPAK and DPAK packaging information 20

9 Revision history 22

1 Diagram

Figure 1. Schematic diagram for adjustable version

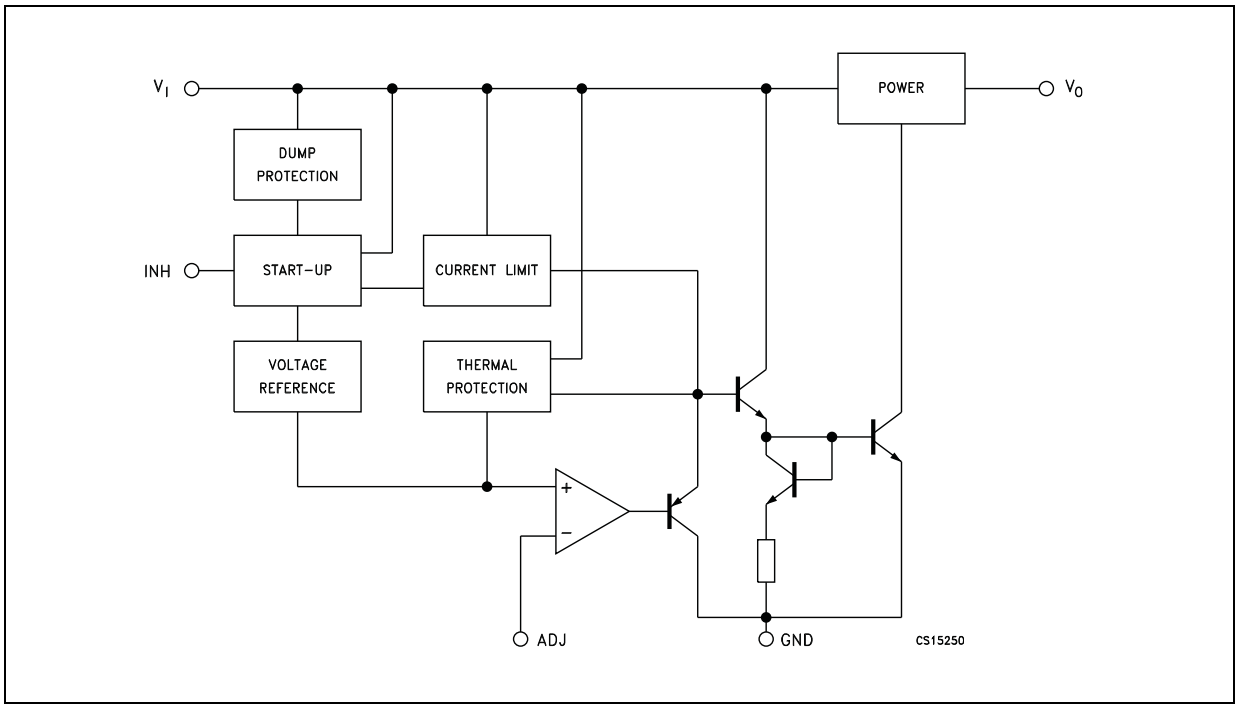

Figure 2. Schematic diagram for fixed version

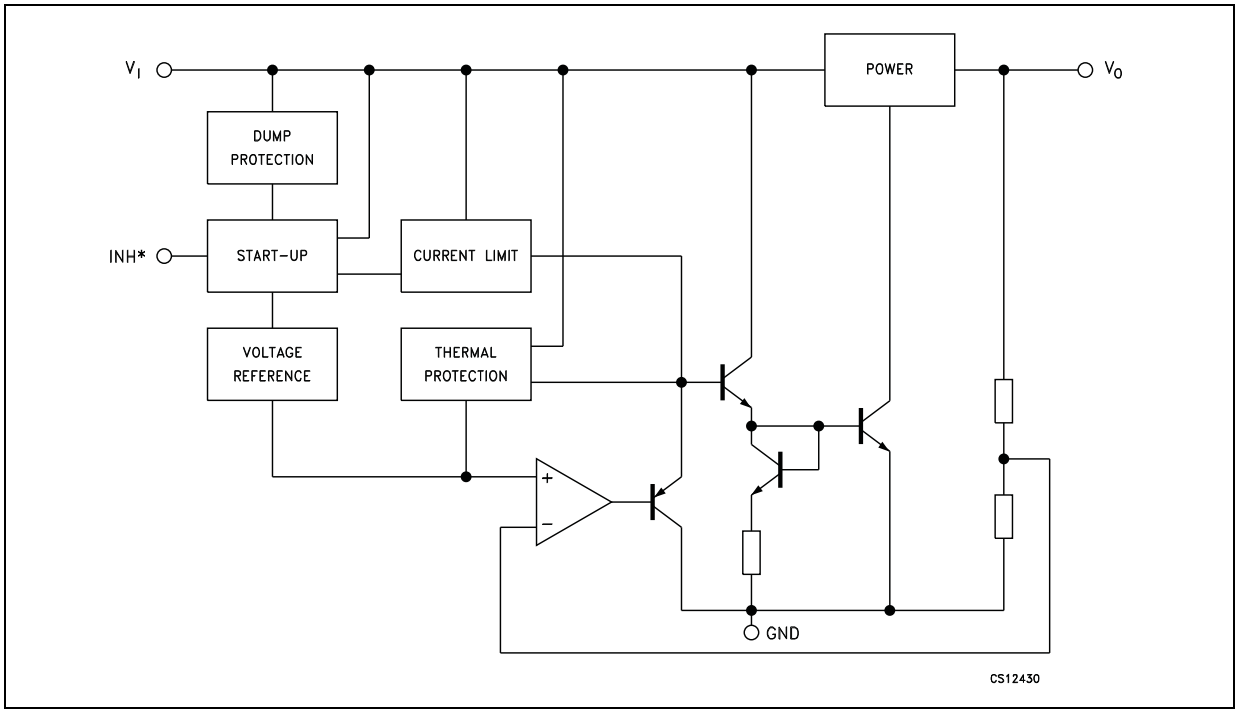

* Only for version with inhibit function.

2 Pin configuration

Figure 3. Pin connections (top view)

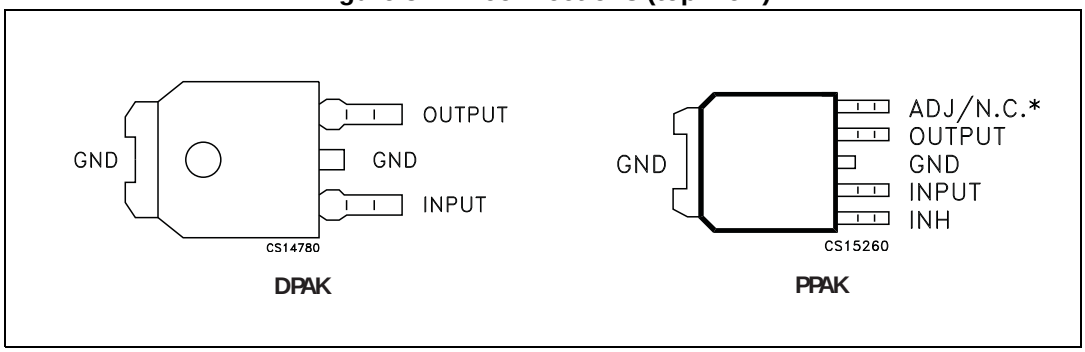

* Not connected for fixed version.

3 Typical application

Figure 4. Application circuit

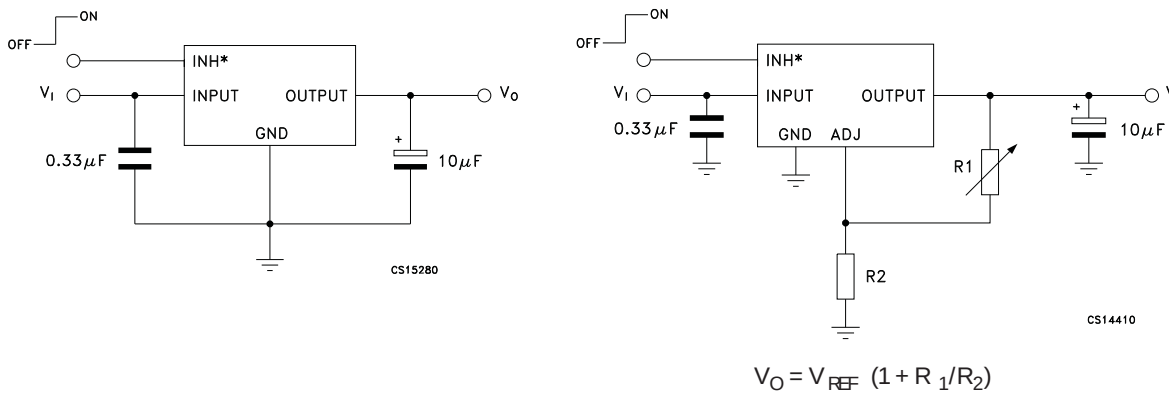

$V_O = V_{REF}\ (1 + R_1/R_2)$

* Only for version with inhibit function.

4 Maximum ratings

Table 2. Absolute maximum ratings

Symbol	Parameter	Value	Unit
V_I	DC input voltage	30 (1)	V
V_O	DC output voltage	-0.3 to 20	V
V_{INH}	Inhibit input voltage	-0.3 to 20	V
I_O	Output current	Internally limited	mA
P_D	Power dissipation	Internally limited	mW
T_{STG}	Storage temperature range	-55 to 150	°C
T_{OP}	Operating junction temperature range	-40 to 125	°C

1. Above 14 V the device is automatically in shut-down.

Note: Absolute maximum ratings are those values beyond which damage to the device may occur. Functional operation under these conditions is not implied.

Table 3. Thermal data

Symbol	Parameter	DPAK	PPAK	Unit
R_{thJA}	Thermal resistance junction-ambient	100	100	°C/W
R_{thJC}	Thermal resistance junction-case	8	8	°C/W

5 Electrical characteristics

I_O = 10 mA, T_J = 25 °C, V_I = 3.8 V, V_{INH} = 2 V (*Note 3*), C_I = 330 nF, C_O = 10 µF, unless otherwise specified.

Table 4. Electrical characteristics of LD29150#18

Symbol	Parameter	Test conditions	Min.	Typ.	Max.	Unit
V_O	Output voltage	I_O = 10 mA to 1.5 A, V_I = 3 to 7.3 V T_J = - 40 to 125 °C	1.782	1.8	1.818	V
			1.764		1.836	
ΔV_O	Load regulation	I_O = 10 mA to 1.5 A		0.2	1.0	%
ΔV_O	Line regulation	V_I = 3 to 13 V		0.06	0.5	%
SVR	Supply voltage rejection	f = 120 Hz, V_I = 3.8 ± 1 V, I_O = 0.75 A (*Note 1*)	62	72		dB
V_{DROP}	Dropout voltage	I_O = 250 mA, T_J = - 40 to 125 °C (*Note 2*)		0.1		V
		I_O = 0.75 A, T_J = - 40 to 125 °C (*Note 2*)		0.2		
		I_O = 1.5 A, T_J = - 40 to 125 °C (*Note 2*)		0.4	0.7	
I_q	Quiescent current	I_O = 0.75 A, T_J = - 40 to 125 °C		15	40	mA
		I_O = 1.5 A, T_J = - 40 to 125 °C		30	80	
		V_I = 13 V, V_{INH} = GND, T_J = - 40 to 125°C		130	180	µA
I_{sc}	Short circuit current	V_I - V_O = 5.5 V		2.2		A
V_{IL}	Control input logic low	OFF MODE, (*Note 3*), T_J = - 40 to 125°C			0.8	V
V_{IH}	Control input logic high	ON MODE, (*Note 3*), T_J = - 40 to 125 °C	2			V
I_{INH}	Control input current	T_J = - 40 to 125 °C, V_{INH} = 13 V		5	10	µA
eN	Output noise voltage	B_P = 10 Hz to 100 kHz, I_O = 100 mA (*Note 1*)		72		μV_{RMS}
T_{SHDN}	Thermal shutdown			150		°C

Note: 1 Guaranteed by design.

2 Dropout voltage is defined as the input-to-output differential when the output voltage drops to 99 % of its nominal value with V_O + 1 V applied to V_I.

3 Only for version with Inhibit function.

I_O = 10 mA, T_J = 25 °C, V_I = 4.5 V, V_{INH} = 2 V (*Note 3*), C_I = 330 nF, C_O = 10 µF, unless otherwise specified.

Table 5. Electrical characteristics of LD29150#25

Symbol	Parameter	Test conditions	Min.	Typ.	Max.	Unit
V_O	Output voltage	I_O = 10 mA to 1.5 A, V_I = 3.5 to 8 V T_J = - 40 to 125 °C	2.475	2.5	2.525	V
			2.45		2.55	
ΔV_O	Load regulation	I_O = 10 mA to 1.5 A		0.2	1.0	%
ΔV_O	Line regulation	V_I = 3.5 to 13 V		0.06	0.5	%
SVR	Supply voltage rejection	f = 120 Hz, V_I = 4.5 ±1 V, I_O = 0.75 A (*Note 1*)	55	70		dB
V_{DROP}	Dropout voltage	I_O = 250 mA, T_J = - 40 to 125 °C (*Note 2*)		0.1		V
		I_O = 0.75 A, T_J = - 40 to 125 °C (*Note 2*)		0.2		
		I_O = 1.5 A, T_J = - 40 to 125 °C (*Note 2*)		0.4	0.7	
I_q	Quiescent current	I_O = 0.75 A, T_J = - 40 to 125 °C		15	40	mA
		I_O = 1.5 A, T_J = - 40 to 125 °C		30	80	
		V_I = 13 V, V_{INH} = GND, T_J = - 40 to 125°C		130	180	µA
I_{sc}	Short circuit current	V_I - V_O = 5.5 V		2.2		A
V_{IL}	Control input logic low	OFF MODE, (*Note 3*), T_J = - 40 to 125 °C			0.8	V
V_{IH}	Control input logic high	ON MODE, (*Note 3*), T_J = - 40 to 125 °C	2			V
I_{INH}	Control input current	T_J = - 40 to 125 °C, V_{INH} = 13 V		5	10	µA
eN	Output noise voltage	B_P = 10 Hz to 100 kHz, I_O = 100 mA (*Note 1*)		100		μV_{RMS}
T_{SHDN}	Thermal shutdown			150		°C

Note: *1* *Guaranteed by design.*

2 *Dropout voltage is defined as the input-to-output differential when the output voltage drops to 9 9% of its nominal value with V_O + 1 V applied to V_I.*

3 *Only for version with Inhibit function.*

I_O = 10 mA, T_J = 25 °C, V_I = 5.3 V, V_{INH} = 2 V (*Note 3*), C_I = 330 nF, C_O = 10 µF, unless otherwise specified.

Table 6. Electrical characteristics of LD29150#33

Symbol	Parameter	Test conditions	Min.	Typ.	Max.	Unit
V_O	Output voltage	I_O = 10 mA to 1.5 A, V_I = 4.3 to 8.8 V T_J = - 40 to 125 °C	3.267	3.3	3.333	V
			3.234		3.366	
ΔV_O	Load regulation	I_O = 10 mA to 1.5 A		0.2	1.0	%
ΔV_O	Line regulation	V_I = 4.3 to 13 V		0.06	0.5	%
SVR	Supply voltage rejection	f = 120 Hz, V_I = 5.3 ±1 V, I_O = 0.75 A (*Note 1*)	52	67		dB
V_{DROP}	Dropout voltage	I_O = 250 mA, T_J = - 40 to 125 °C (*Note 2*)		0.1		V
		I_O = 0.75 A, T_J = - 40 to 125 °C (*Note 2*)		0.2		
		I_O = 1.5 A, T_J = - 40 to 125 °C (*Note 2*)		0.4	0.7	
I_q	Quiescent current	I_O = 0.75 A, T_J = - 40 to 125 °C		15	40	mA
		I_O = 1.5 A, T_J = - 40 to 125 °C		30	80	
		V_I = 13 V, V_{INH} = GND, T_J = - 40 to 125°C		130	180	µA
I_{sc}	Short circuit current	V_I - V_O = 5.5 V		2.2		A
V_{IL}	Control input logic low	OFF MODE, (*Note 3*), T_J = - 40 to 125 °C			0.8	V
V_{IH}	Control input logic high	ON MODE, (*Note 3*), T_J = - 40 to 125 °C	2			V
I_{INH}	Control input current	T_J = - 40 to 125 °C, V_{INH} = 13 V		5	10	µA
eN	Output noise voltage	B_P = 10 Hz to 100 kHz, I_O = 100 mA (*Note 1*)		132		μV_{RMS}
T_{SHDN}	Thermal shutdown			150		°C

Note: 1 *Guaranteed by design.*

2 *Dropout voltage is defined as the input-to-output differential when the output voltage drops to 99 % of its nominal value with V_O + 1 V applied to V_I.*

3 *Only for version with Inhibit function.*

I_O = 10 mA, T_J = 25 °C, V_I = 7 V, V_{INH} = 2 V (*Note 3*), C_I = 330 nF, C_O = 10 µF, unless otherwise specified.

Table 7. Electrical characteristics of LD29150#50

Symbol	Parameter	Test conditions	Min.	Typ.	Max.	Unit
V_O	Output voltage	I_O = 10 mA to 1.5 A, V_I = 6 to 10.5 V T_J = - 40 to 125 °C	4.95	5	5.05	V
			4.9		5.1	
ΔV_O	Load regulation	I_O = 10 mA to 1.5 A		0.2	1.0	%
ΔV_O	Line regulation	V_I = 6 to 13 V		0.06	0.5	%
SVR	Supply voltage rejection	f = 120 Hz, V_I = 7 ±1 V, I_O = 0.75 A (*Note 1*)	49	64		dB
V_{DROP}	Dropout voltage	I_O = 250 mA, T_J = - 40 to 125 °C (*Note 2*)		0.1		V
		I_O = 0.75 A, T_J = - 40 to 125 °C (*Note 2*)		0.2		
		I_O = 1.5 A, T_J = - 40 to 125 °C (*Note 2*)		0.4	0.7	
I_q	Quiescent current	I_O = 0.75 A, T_J = - 40 to 125 °C		15	40	mA
		I_O = 1.5 A, T_J = - 40 to 125 °C		30	80	
		V_I = 13 V, V_{INH} = GND, T_J = - 40 to 125°C		130	180	µA
I_{sc}	Short circuit current	V_I - V_O = 5.5 V		2.2		A
V_{IL}	Control input logic low	OFF MODE, (*Note 3*), T_J = - 40 to 125 °C			0.8	V
V_{IH}	Control input logic high	ON MODE, (*Note 3*), T_J = - 40 to 125 °C	2			V
I_{INH}	Control input current	T_J = - 40 to 125 °C, V_{INH} = 13 V		5	10	µA
eN	Output noise voltage	B_P = 10 Hz to 100 kHz, I_O = 100 mA (*Note 1*)		200		μV_{RMS}
T_{SHDN}	Thermal shutdown			150		°C

Note: 1 *Guaranteed by design.*

2 *Dropout voltage is defined as the input-to-output differential when the output voltage drops to 99 % of its nominal value with V_O + 1 V applied to V_I.*

3 *Only for version with Inhibit function.*

I_O = 10 mA, T_J = 25 °C, V_I = 3.23 V, V_{INH} = 2 V (*Note 3*), C_I = 330 nF, C_O = 10 µF adjust pin tied to output pin.

Table 8. Electrical characteristics of LD29150#ADJ

Symbol	Parameter	Test conditions	Min.	Typ.	Max.	Unit
V_I	Minimum operating input voltage	I_O = 10 mA to 1.5 A, T_J = - 40 to 125 °C	2.5			V
ΔV_O	Load regulation	I_O = 10 mA to 1.5 A		0.2	1.0	%
ΔV_O	Line regulation	V_I = 2.5 V to 13 V, I_O = 10 mA		0.06	0.5	%
V_{REF}	Reference voltage	I_O = 10 mA to 1.5 A, V_I = 2.5 to 4.5 V T_J = - 40 to 125 °C (*Note 2*)	-1%	1.23	+1%	V
			-2%		+2%	
SVR	Supply voltage rejection	f = 120 Hz, V_I = 3.23 ±1 V, I_O = 0.75 A (*Note 1*)	45	75		dB
I_q	Quiescent current	I_O = 0.75 A, T_J = - 40 to 125 °C		15	40	mA
		I_O = 1.5 A, T_J = - 40 to 125 °C		30	80	
		V_I = 13 V, V_{INH} = GND, T_J = - 40 to 125°C		130	180	µA
I_{ADJ}	Adjust pin current	T_J = - 40 to 125 °C (*Note 1*)			1	µA
I_{sc}	Short circuit current	V_I - V_O = 5.5 V		2.2		A
V_{IL}	Control input logic low	OFF MODE, (*Note 3*),T_J = - 40 to 125 °C			0.8	V
V_{IH}	Control input logic high	ON MODE, (*Note 3*), T_J = - 40 to 125 °C	2			V
I_{INH}	Control input current	T_J = - 40 to 125 °C, V_{INH} = 13 V		5	10	µA
eN	Output noise voltage	B_P = 10 Hz to 100 kHz, I_O = 100 mA (*Note 1*)		50		μV_{RMS}
T_{SHDN}	Thermal shutdown			150		°C

Note: 1 Guaranteed by design.

2 Reference voltage is measured between output and GND pin, with ADJ PIN tied to V_{OUT}.

3 Only for version with Inhibit function.

6 Typical characteristics

Figure 5. Output voltage vs. temperature

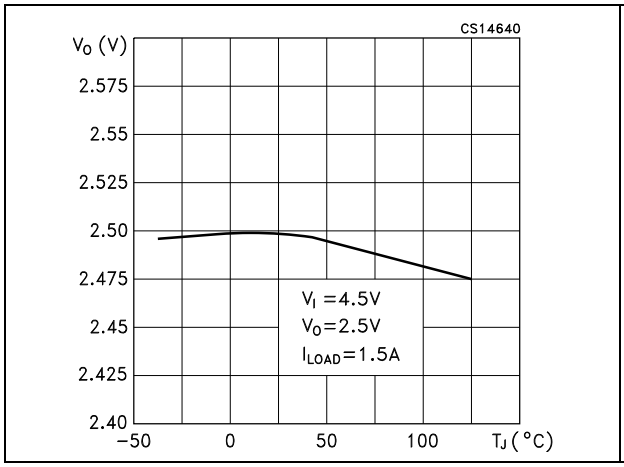

Figure 6. Reference voltage vs. temperature

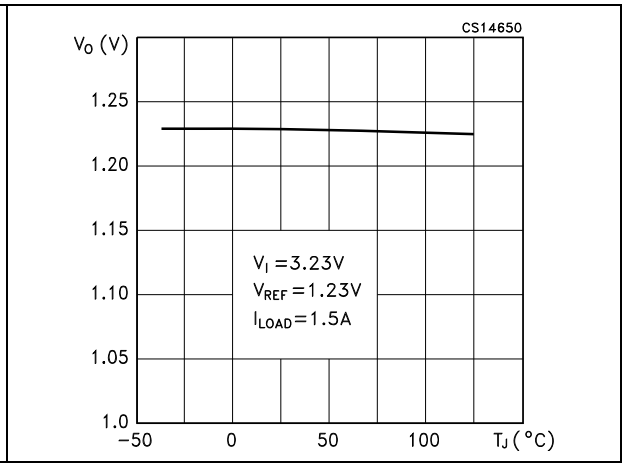

Figure 7. Dropout voltage vs. temperature

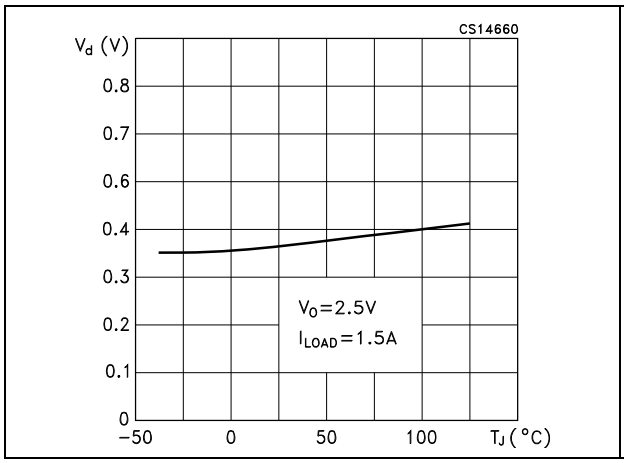

Figure 8. Dropout voltage vs. output current

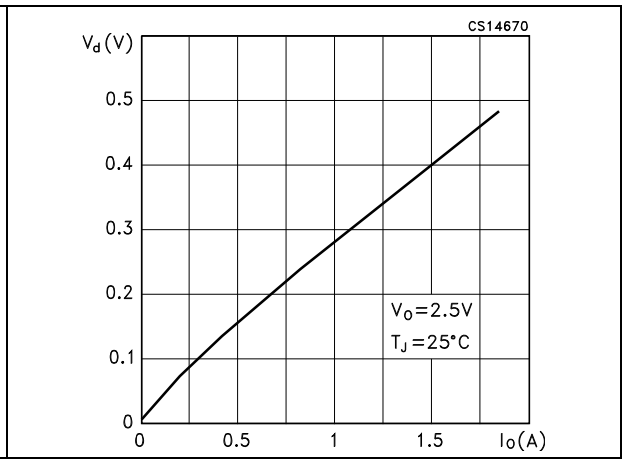

Figure 9. Quiescent current vs. output current (V_I = 13 V)

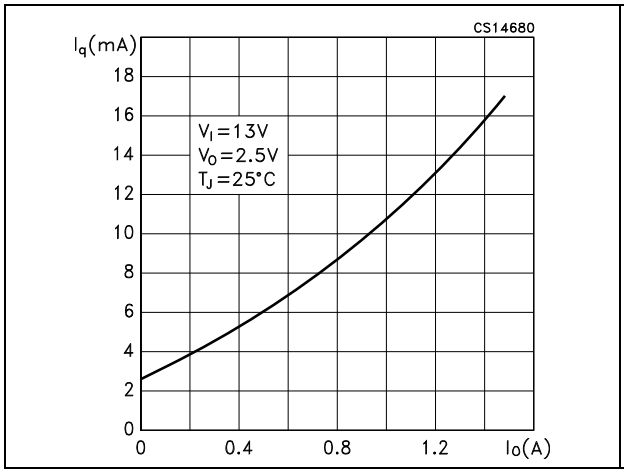

Figure 10. Quiescent current vs. output current (V_I = 4.5 V)

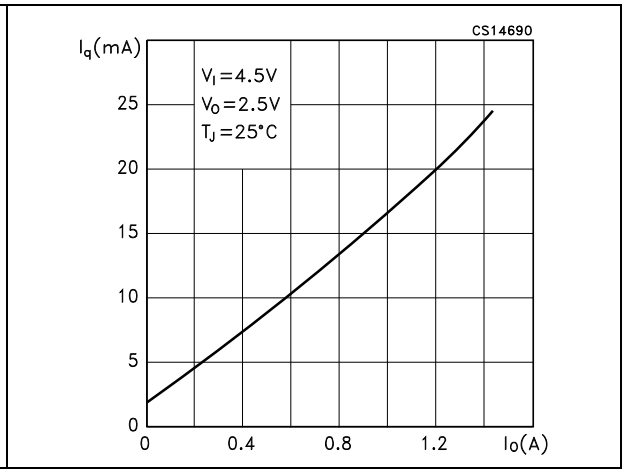

Figure 11. Quiescent current vs. supply voltage

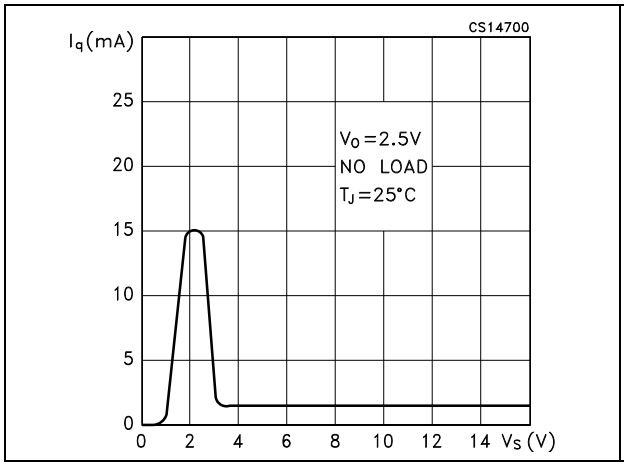

Figure 12. Quiescent current vs. temperature (I_O = 10 mA)

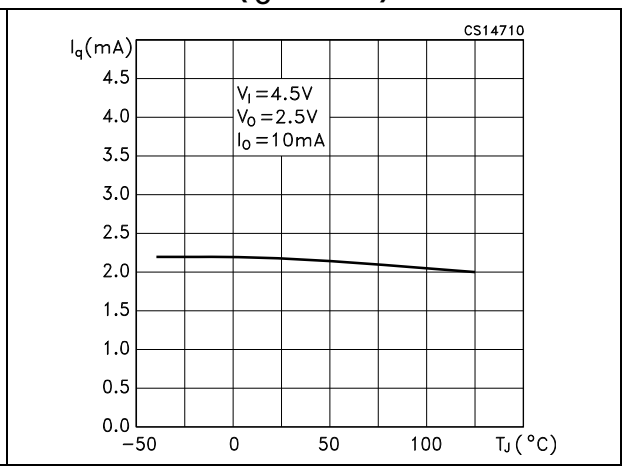

Figure 13. Quiescent current vs. temperature (I_O = 1.5 A)

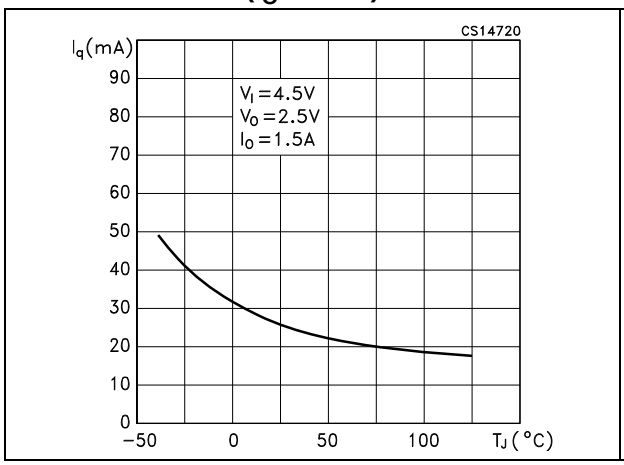

Figure 14. Short circuit current vs. temperature

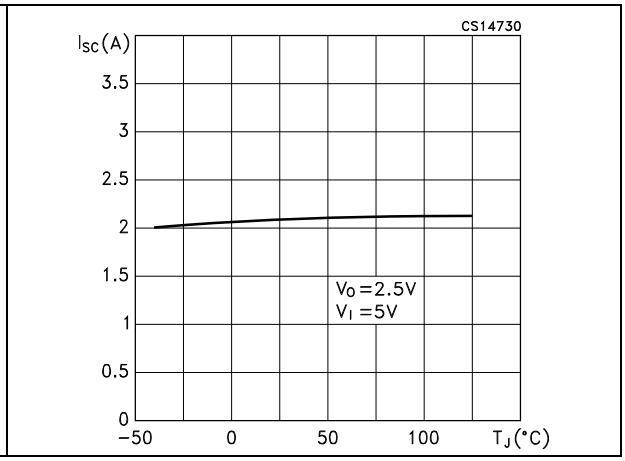

Figure 15. Adjust pin current vs. temperature

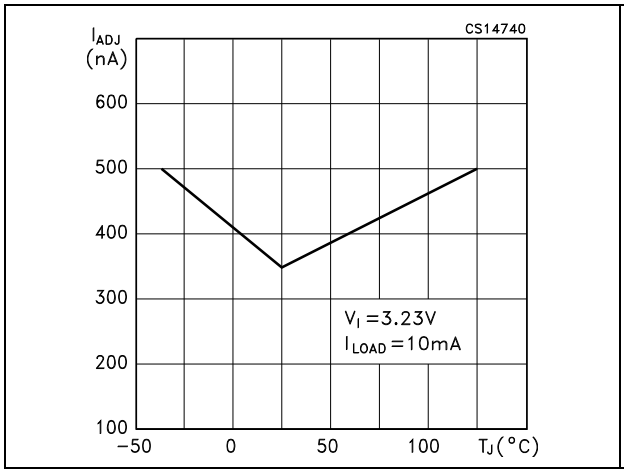

Figure 16. Supply voltage rejection vs. temperature

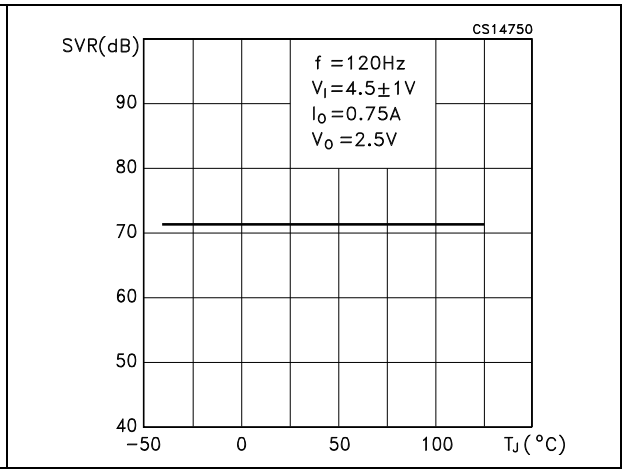

Figure 17. Output voltage vs. input voltage

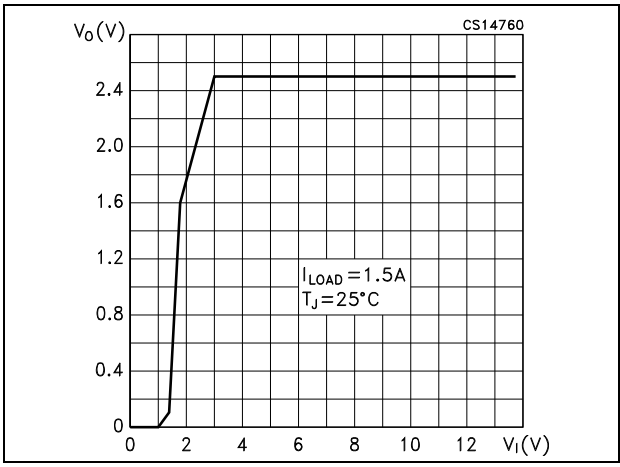

Figure 18. Stability vs. C_O

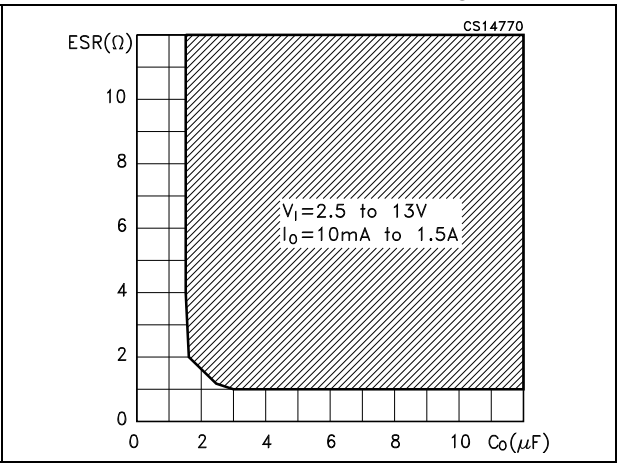

Figure 19. Line transient

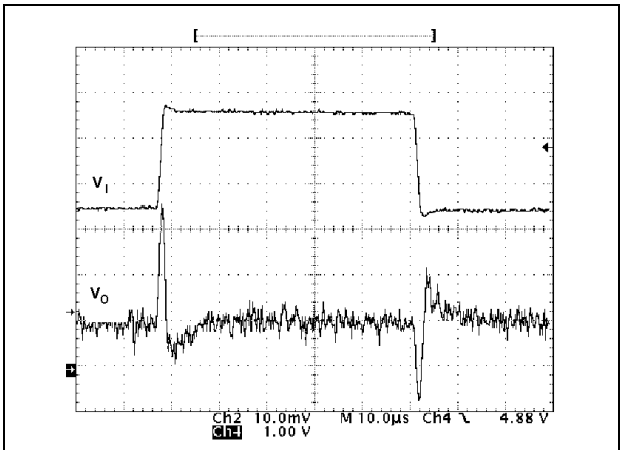

V_I=3.5 to 5.5V, I_O=10mA, V_O=2.5V, C_O=10µF

Figure 20. Load transient

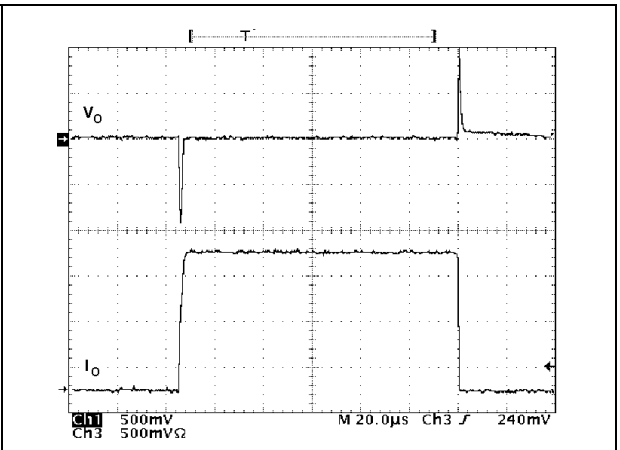

V_I=5V, I_O=10mA to 1.5A, V_O=2.5V, C_O=10µF

Figure 21. Start-up time 10 mA

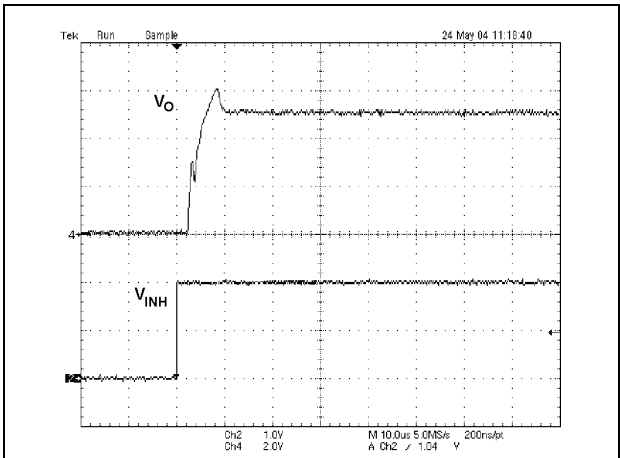

C_O=10µF, I_O=10mA, V_{INH}=2V, V_O=5V, V_I=7V

Figure 22. Start-up time 1.5 A

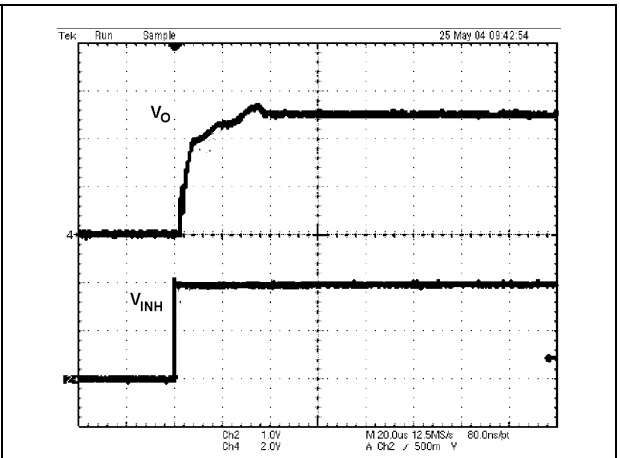

C_O=10µF, I_O=1.5A, V_{INH}=2V, V_O=5V, V_I=7V

7 Package information

In order to meet environmental requirements, ST offers these devices in different grades of ECOPACK® packages, depending on their level of environmental compliance. ECOPACK® specifications, grade definitions and product status are available at: *www.st.com*. ECOPACK® is an ST trademark.

7.1 DPAK package information

Table 9. DPAK mechanical data

Dim.	mm		
	Min.	Typ.	Max.
A	2.20		2.40
A1	0.90		1.10
A2	0.03		0.23
b	0.64		0.90
b4	5.20		5.40
c	0.45		0.60
c2	0.48		0.60
D	6.00		6.20
D1		5.10	
E	6.40		6.60
E1		4.70	
e		2.28	
e1	4.40		4.60
H	9.35		10.10
L	1.00		1.50
(L1)		2.80	
L2		0.80	
L4	0.60		1.00
R		0.20	
V2	0°		8°

Figure 23. DPAK outline

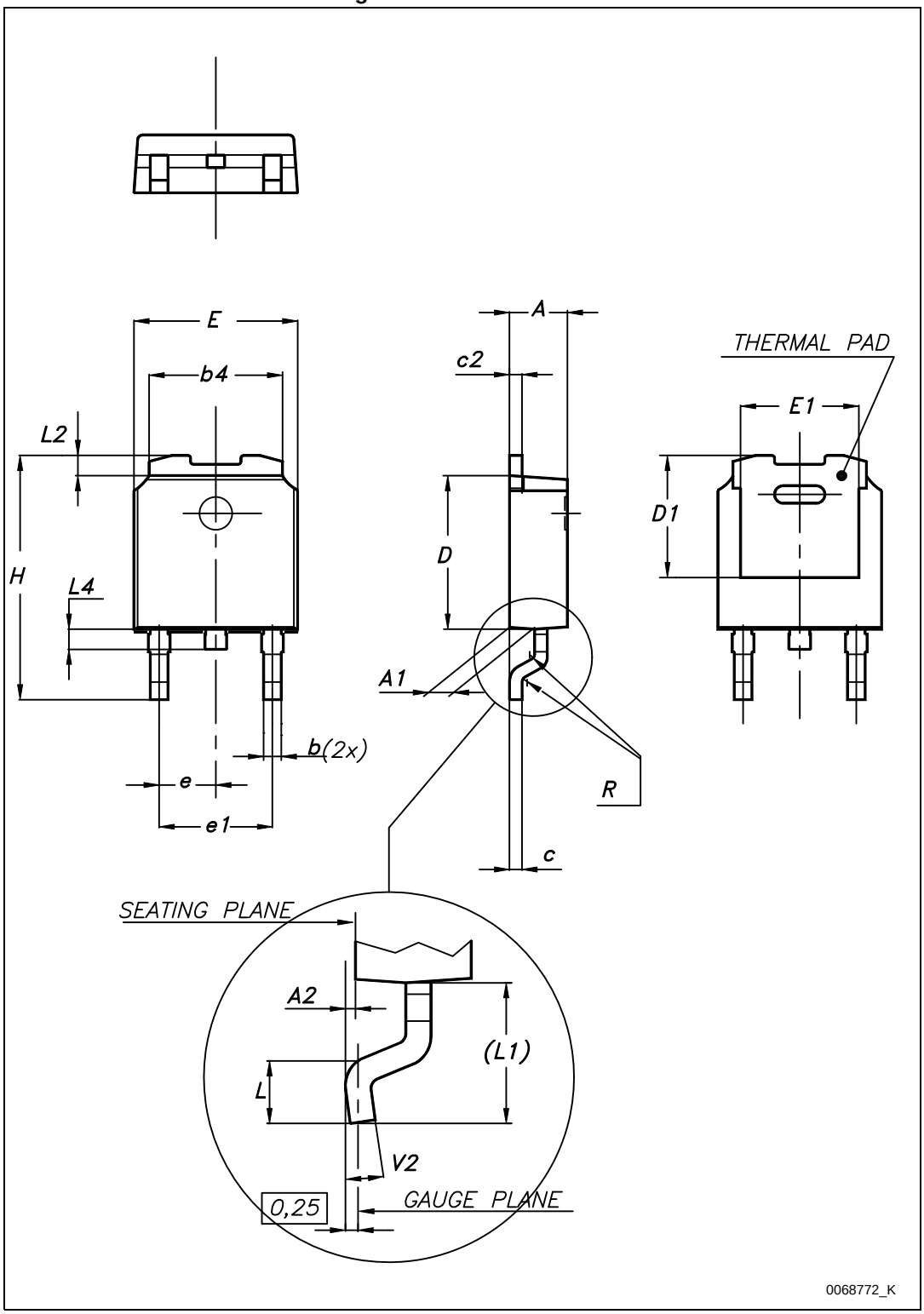

Figure 24. DPAK footprint [a]

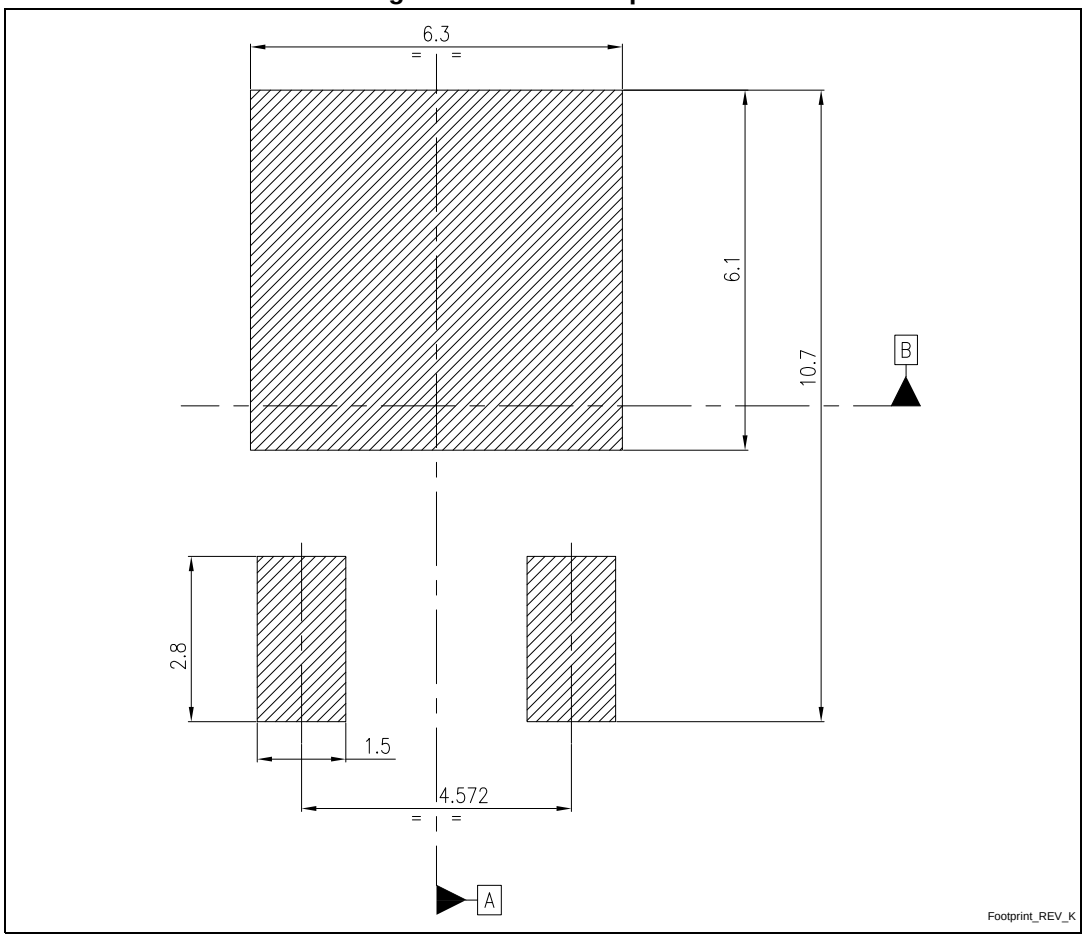

a. All dimensions are in millimeters

7.2 PPAK package information

Table 10. PPAK mechanical data

Dim.	mm		
	Min.	Typ.	Max.
A	2.2		2.4
A1	0.9		1.1
A2	0.03		0.23
B	0.4		0.6
B2	5.2		5.4
C	0.45		0.6
C2	0.48		0.6
D	6		6.2
D1		5.1	
E	6.4		6.6
E1		4.7	
e		1.27	
G	4.9		5.25
G1	2.38		2.7
H	9.35		10.1
L2		0.8	1
L4	0.6		1
L5	1		
L6		2.8	
R		0.20	
V2	0°		8°

Figure 25. PPAK outline

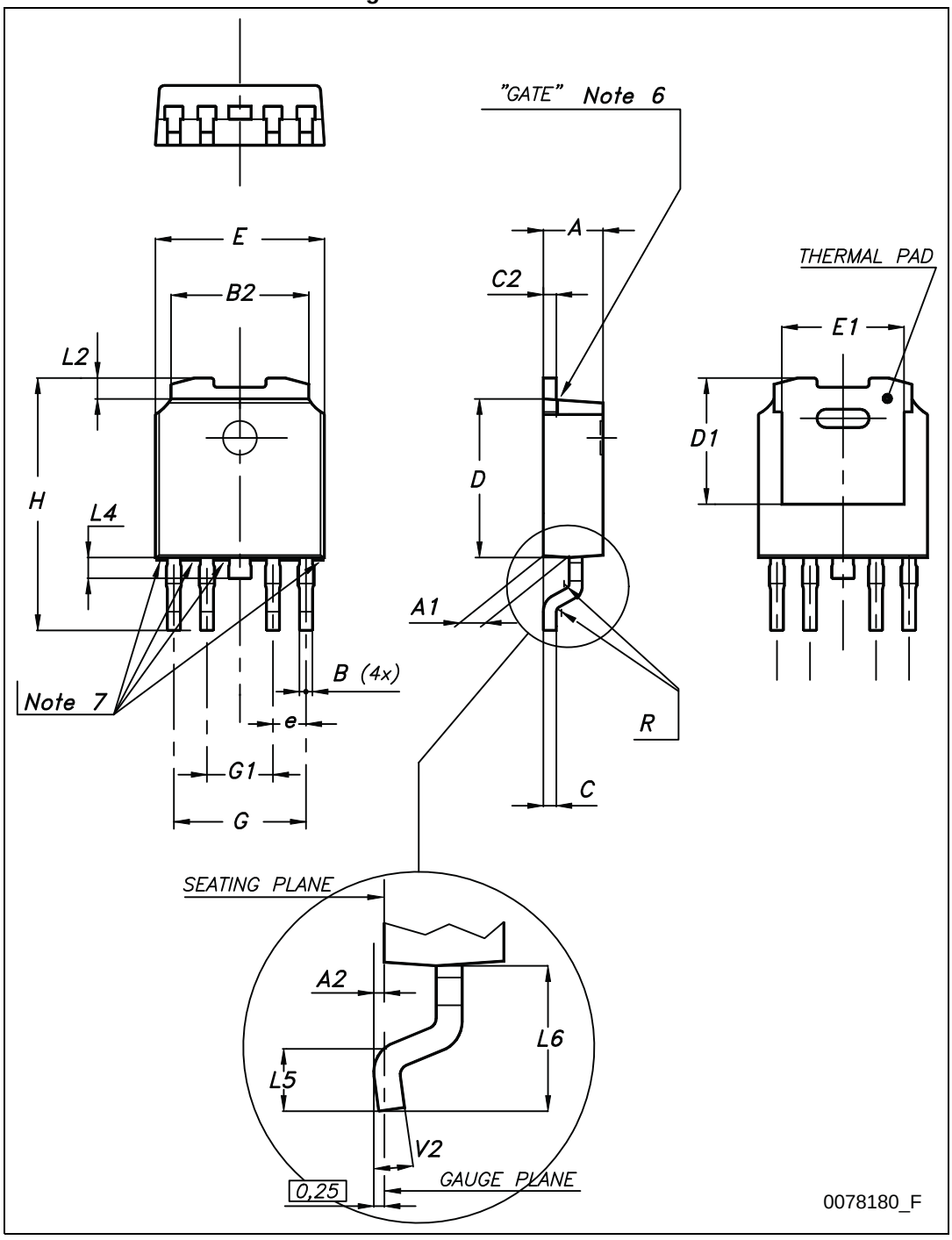

8 Packaging information

8.1 PPAK and DPAK packaging information

Table 11. PPAK and DPAK tape and reel mechanical data

Tape			Reel		
Dim.	mm		Dim.	mm	
	Min.	Max.		Min.	Max.
A0	6.8	7	A		330
B0	10.4	10.6	B	1.5	
B1		12.1	C	12.8	13.2
D	1.5	1.6	D	20.2	
D1	1.5		G	16.4	18.4
E	1.65	1.85	N	50	
F	7.4	7.6	T		22.4
K0	2.55	2.75			
P0	3.9	4.1	Base qty.		2500
P1	7.9	8.1	Bulk qty.		2500
P2	1.9	2.1			
R	40				
T	0.25	0.35			
W	15.7	16.3			

Figure 26. Tape for PPAK and DPAK

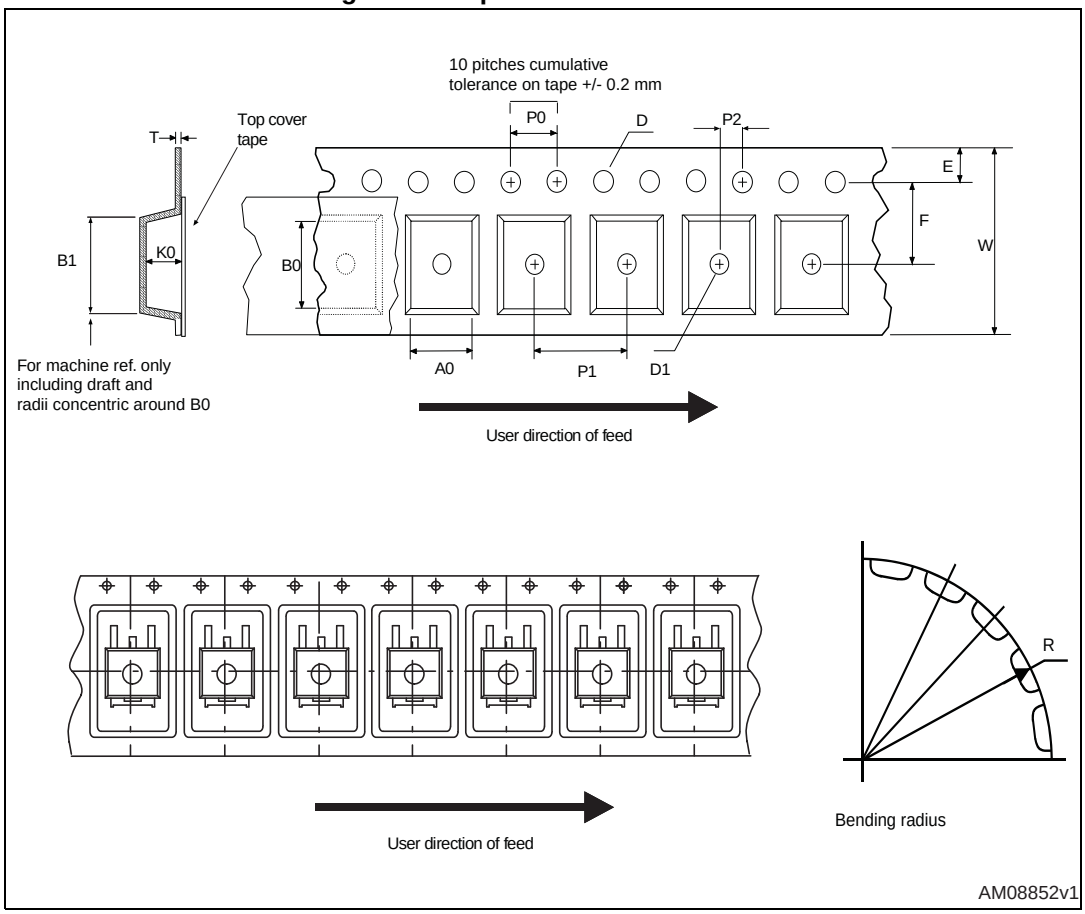

Figure 27. Reel for PPAK and DPAK

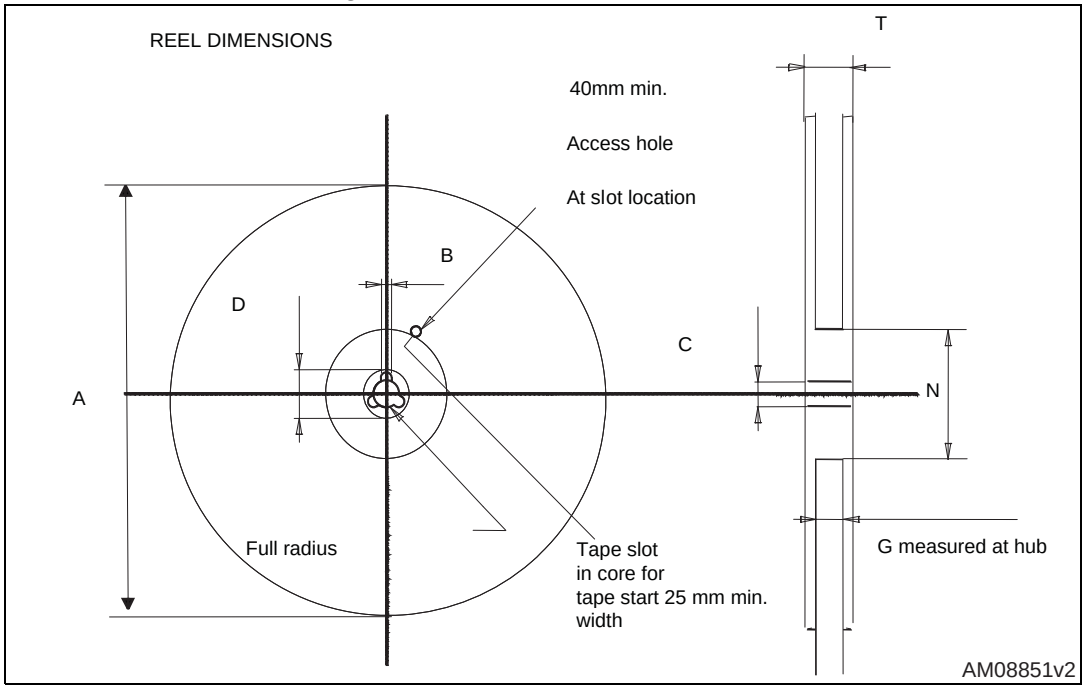

9 Revision history

Table 12. Document revision history

Date	Revision	Changes
17-Jun-2004	5	Add figures 20 and 21, PPAK, TO-220 and TO-220FP mechanical data updated.
19-Jul-2004	6	Remove Package TO-220FP4.
08-Nov-2004	7	Mistake Figure 7.
21-Mar-2005	8	Add V_O and V_{INH} on Table 2.
21-Oct-2005	9	Order Codes Has Been Updated.
17-Oct-2006	10	Add new package P²PAK.
13-Nov-2006	11	Add row T_{SHDN} on tables of the electrical characteristics.
11-May-2007	12	Order codes updated.
15-Feb-2008	13	Added: *Table 1 on page 1*.
28-Jul-2009	14	Modified: *Table 1 on page 1*.
22-Sep-2010	15	Modified: *Table 1 on page 1*.
27-Oct-2010	16	Updated: DPAK mechanical data *on page 25*.
07-May-2012	17	Modified: pin connections for PPAK, P²PAK and DPAK *Figure 3 on page 4*.
06-Sep-2012	18	Updated: figure for P²PAK in cover page.
30-Oct-2013	19	Changed the LD29150XX to LD29150. Updated: Description in cover page. Updated *Section 5: Electrical characteristics* and *Section 7: Package mechanical data*. Added *Section 8: Packaging mechanical data*. Minor text changes.
30-Aug-2017	20	Removed P²PAK package option (order code LD29150P2T33R)

IMPORTANT NOTICE – PLEASE READ CAREFULLY

STMicroelectronics NV and its subsidiaries (“ST”) reserve the right to make changes, corrections, enhancements, modifications, and improvements to ST products and/or to this document at any time without notice. Purchasers should obtain the latest relevant information on ST products before placing orders. ST products are sold pursuant to ST’s terms and conditions of sale in place at the time of order acknowledgement.

Purchasers are solely responsible for the choice, selection, and use of ST products and ST assumes no liability for application assistance or the design of Purchasers’ products.

No license, express or implied, to any intellectual property right is granted by ST herein.

Resale of ST products with provisions different from the information set forth herein shall void any warranty granted by ST for such product.

ST and the ST logo are trademarks of ST. All other product or service names are the property of their respective owners.

Information in this document supersedes and replaces information previously supplied in any prior versions of this document.

© 2017 STMicroelectronics – All rights reserved