LA Varistor Series

The LA Series of transient voltage surge suppressors are radial-lead varistors (MOVs) that are designed to be operated continuously across AC power lines. These UL recognized varistors require very little mounting space, and are offered in various standard lead form options.

The LA Series varistors are available in four model sizes: 7mm, 10mm, 14mm and 20mm; and have a $V_{M(AC)RMS}$ voltage range from 130V to 1000V, and an energy absorption capability up to 360J. Some LA series model numbers are available with clamping voltage selections, designated by a model number suffix of either A or B. The "A" selection is the standard model; the "B" selection provides a lower clamping voltage.

See LA Series Device Ratings and Specifications table for part number and brand information.

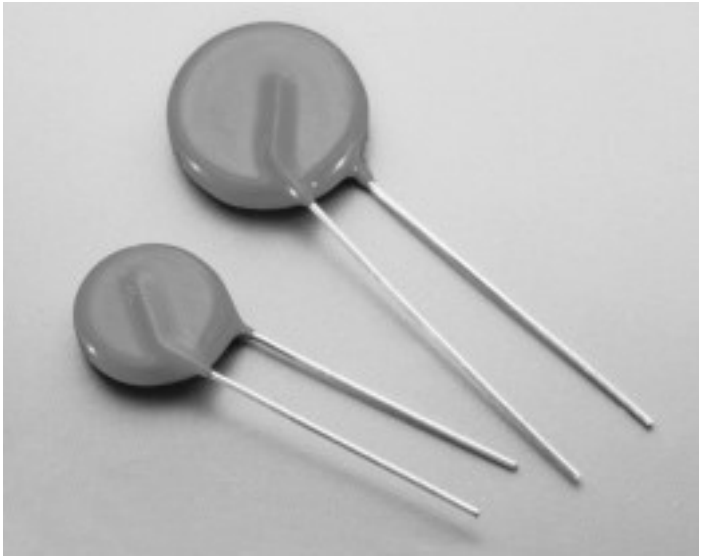

Features

- Lead-free and RoHS compliant option available. Please see the device and ratings specifications table for more information.
- Energy Absorption Capability (W_{TM}) . . . . . Up to 360J
- Wide Operating Voltage Range $V_{M(AC)RMS}$ . . . . . 130V to 1000V
- No Derating Up to 85°C Ambient
- Available in Tape and Reel or Bulk Pack

AGENCY APPROVALS: Standard and Lead-free parts recognized under the components program of Underwriters Laboratories. Certified by CSA, VDE and CECC.

AGENCY FILE NUMBERS: UL E75961, E56529, E135010; CSA LR91788; VDE 116895E; CECC 42201-006.

NEW LEAD-FREE AND RoHS COMPLIANT PARTS AVAILABLE

ALSO SEE LITTELFUSE ULTRAMOV™ AND C-III VARISTOR SERIES

RoHS Pb LA Varistor Series

Absolute Maximum Ratings For ratings of individual members of a series, see Device Ratings and Specifications chart

	LA SERIES	UNITS
Continuous:		
Steady State Applied Voltage:		
AC Voltage Range ($V_{M(AC)RMS}$)	130 to 1000	V
DC Voltage Range ($V_{M(DC)}$)	175 to 1200	V
Transients:		
Peak Pulse Current (I_{TM})		
For 8/20µs Current Wave (See Figure 2)	1200 to 6500	A
Single Pulse Energy Range		
For 10/1000µs Current Wave (W_{TM})	11 to 360	J
Operating Ambient Temperature Range (T_A)	-55 to 85	°C
Storage Temperature Range (T_{STG})	-55 to 125	°C
Temperature Coefficient (V) of Clamping Voltage (V_C) at Specified Test Current	<0.01	%/°C
Hi-Pot Encapsulation (Isolation Voltage Capability)	2500	V
(Dielectric must withstand indicated DC voltage for one minute per MIL-STD 202, Method 301)		
Insulation Resistance	1000	MΩ

CAUTION: Stresses above those listed in "Absolute Maximum Ratings" may cause permanent damage to the device. This is a stress only rating and operation of the device at these or any other conditions above those indicated in the operational sections of this specification is not implied.

VARISTOR

Device Ratings and Specifications

RoHS Pb LEAD-FREE AND RoHS COMPLIANT MODELS		STANDARD MODELS		MODEL SIZE DISC DIA.	MAXIMUM RATING (85°C)				SPECIFICATIONS (25°C)				
					CONTINUOUS		TRANSIENT						
					V_{RMS}	V_{DC}	ENERGY 10 x 1000µs	PEAK CURRENT 8 x 20µs	VARISTOR VOLTAGE AT 1mA DC TEST CURRENT		MAXIMUM CLAMPING VOLTAGE 8 x 20µs		TYPICAL CAPACITANCE f = 1MHz
PART NUMBER	BRANDING	PART NUMBER	BRANDING	(mm)	$V_{M(AC)}$ (V)	$V_{M(DC)}$ (V)	W_{TM} (J)	I_{TM} (A)	V_{NOM} MIN (V)	V_{NOM} MAX (V)	V_C (V)	I_{PK} (A)	C (pF)
V130LA1P	P1301	V130LA1	1301	7	130	175	11	1200	184	255	390	10	180
V130LA2P	P1302	V130LA2	1302	7	130	175	11	1200	184	228	340	10	180
V130LA5P	P1305	V130LA5	1305	10	130	175	20	2500	184	228	340	25	450
V130LA10AP	P130L10	V130LA10A	130L10	14	130	175	38	4500	184	228	340	50	1000
V130LA20AP	P130L20	V130LA20A	130L20	20	130	175	70	6500	184	228	340	100	1900
V130LA20BP	P130L20B	V130LA20B	130L20B	20	130	175	70	6500	184	220	325	100	1900
V140LA2P	P1402	V140LA2	1402	7	140	180	12	1200	198	242	360	10	160
V140LA5P	P1405	V140LA5	1405	10	140	180	22	2500	198	242	360	25	400
V140LA10AP	P140L10	V140LA10A	140L10	14	140	180	42	4500	198	242	360	50	900
V140LA20AP	P140L20	V140LA20A	140L20	20	140	180	75	6500	198	242	340	100	1750
V150LA1P	P1501	V150LA1	1501	7	150	200	13	1200	212	284	430	10	150
V150LA2P	P1502	V150LA2	1502	7	150	200	13	1200	212	268	395	10	150
V150LA5P	P1505	V150LA5	1505	10	150	200	25	2500	212	268	395	25	360
V150LA10AP	P150L10	V150LA10A	150L10	14	150	200	45	4500	212	268	395	50	800
V150LA20AP	P150L20	V150LA20A	150L20	20	150	200	80	6500	212	268	395	100	1600
V150LA20BP	P150L20B	V150LA20B	150L20B	20	150	200	80	6500	212	243	360	100	1600
V175LA2P	P1752	V175LA2	1752	7	175	225	15	1200	247	303	455	10	130
V175LA5P	P1755	V175LA5	1755	10	175	225	30	2500	247	303	455	25	350
V175LA10AP	P175L10	V175LA10A	175L10	14	175	225	55	4500	247	303	455	50	700
V175LA20AP	P175L20	V175LA20A	175L20	20	175	225	90	6500	247	303	455	100	1400
V230LA4P	P2304	V230LA4	2304	7	230	300	20	1200	324	396	595	10	100
V230LA10P	P230L	V230LA10	230L	10	230	300	35	2500	324	396	595	25	250
V230LA20AP	P230L20	V230LA20A	230L20	14	230	300	70	4500	324	396	595	50	550
V230LA40AP	P230L40	V230LA40A	230L40	20	230	300	122	6500	324	396	595	100	1100

RoHS Pb LA Varistor Series

Device Ratings and Specifications (Continued)

RoHS Pb LEAD-FREE AND RoHS COMPLIANT MODELS		STANDARD MODELS		MODEL SIZE DISC DIA. (mm)	MAXIMUM RATING (85°C)				SPECIFICATIONS (25°C)				
					CONTINUOUS		TRANSIENT		VARISTOR VOLTAGE AT 1mA DC TEST CURRENT		MAXIMUM CLAMPING VOLTAGE 8 x 20µs		TYPICAL CAPACITANCE f = 1MHz
					V_{RMS}	V_{DC}	ENERGY 10 x 1000µs	PEAK CURRENT 8 x 20µs					
PART NUMBER	BRANDING	PART NUMBER	BRANDING		$V_{M(AC)}$	$V_{M(DC)}$	W_{TM}	I_{TM}	V_{NOM} MIN	V_{NOM} MAX	V_C	I_{PK}	C
					(V)	(V)	(J)	(A)	(V)		(V)	(A)	(pF)
V250LA2P	P2502	V250LA2	2502	7	250	330	21	1200	354	473	730	10	90
V250LA4P	P2504	V250LA4	2504	7	250	330	21	1200	354	429	650	10	90
V250LA10P	P250L	V250LA10	250L	10	250	330	40	2500	354	429	650	25	220
V250LA20AP	P250L20	V250LA20A	250L20	14	250	330	72	4500	354	429	650	50	500
V250LA40AP	P250L40	V250LA40A	250L40	20	250	330	130	6500	354	429	650	100	1000
V250LA40BP	P250L40B	V250LA40B	250L40B	20	250	330	130	6500	354	413	620	100	1000
V275LA2P	P2752	V275LA2	2752	7	275	369	23	1200	389	515	775	10	80
V275LA4P	P2754	V275LA4	2754	7	275	369	23	1200	389	473	710	10	80
V275LA10P	P275L	V275LA10	275L	10	275	369	45	2500	389	473	710	25	200
V275LA20AP	P275L20	V275LA20A	275L20	14	275	369	75	4500	389	473	710	50	450
V275LA40AP	P275L40	V275LA40A	275L40	20	275	369	140	6500	389	473	710	100	900
V275LA40BP	P275L40B	V275LA40B	275L40B	20	275	369	140	6500	389	453	680	100	900
V300LA2P	P3002	V300LA2	3002	7	300	405	25	1200	420	565	870	10	70
V300LA4P	P3004	V300LA4	3004	7	300	405	25	1200	420	517	775	10	70
V300LA10P	P300L	V300LA10	300L	10	300	405	46	2500	420	517	775	25	180
V300LA20AP	P300L20	V300LA20A	300L20	14	300	405	77	4500	420	517	775	50	400
V300LA40AP	P300L40	V300LA40A	300L40	20	300	405	165	6500	420	517	775	100	800
V320LA7P	P3207	V320LA7	3207	7	320	420	25	1200	462	565	850	10	65
V320LA10P	P320L	V320LA10	320L	10	320	420	48	2500	462	565	850	25	170
V320LA20AP	P320L20	V320LA20A	320L20	14	320	420	80	4500	462	565	850	50	380
V320LA40BP	P320L40	V320LA40B	320L40	20	320	420	150	6500	462	540	810	100	750
V385LA7P	P3857	V385LA7	3857	7	385	505	27	1200	558	682	1025	10	60
V385LA10P	P385L	V385LA10	385L	10	385	505	51	2500	558	682	1025	25	160
V385LA20AP	P385L20	V385LA20A	385L20	14	385	505	85	4500	558	682	1025	50	360
V385LA40BP	P385L40	V385LA40B	385L40	20	385	505	160	6500	558	682	1025	100	700
V420LA7P	P4207	V420LA7	4207	7	420	560	30	1200	610	748	1120	10	55
V420LA10P	P420L	V420LA10	420L	10	420	560	55	2500	610	748	1120	25	140
V420LA20AP	P420L20	V420LA20A	420L20	14	420	560	90	4500	610	748	1120	50	300
V420LA40BP	P420L40	V420LA40B	420L40	20	420	560	160	6500	610	720	1060	100	600
V460LA7P	P4607	V460LA7	4607	7	460	615	37	1200	702	858	1130	10	55
V480LA7P	P4807	V480LA7	4807	7	480	640	35	1200	670	825	1240	10	50
V480LA10P	P480L	V480LA10	480L	10	480	640	60	2500	670	825	1240	25	120
V480LA40AP	P480L40	V480LA40A	480L40	14	480	640	105	4500	670	825	1240	50	270
V480LA80BP	P480L80	V480LA80B	480L80	20	480	640	180	6500	670	790	1160	100	550
V510LA10P	P510L	V510LA10	510L	10	510	675	63	2500	735	910	1350	25	100
V510LA40AP	P510L40	V510LA40A	510L40	14	510	675	110	4500	735	910	1350	50	250
V510LA80BP	P510L80	V510LA80B	510L80	20	510	675	190	6500	735	860	1280	100	500
V575LA10P	P575L	V575LA10	575L	10	575	730	65	2500	805	1000	1500	25	90
V575LA40AP	P575L40	V575LA40A	575L40	14	575	730	120	4500	805	1000	1500	50	220
V575LA80BP	P575L80	V575LA80B	575L80	20	575	730	220	6500	805	960	1410	100	450
V625LA10P	P625L	V625LA10	625L	10	625	825	67	2500	900	1100	1650	25	80
V625LA40AP	P625L40	V625LA40A	625L40	14	625	825	125	4500	900	1100	1650	50	210
V625LA80BP	P625L80	V625LA80B	625L80	20	625	825	230	6500	900	1100	1650	100	425
V680LA10P	P680L	V680LA10	680L	10	680	875	75	2500	990	1240	1875	25	65
V680LA80AP	P680L80	V680LA80A	680L80	14	680	875	145	4500	990	1240	1875	50	190
V680LA100BP	P680L100	V680LA100B	680L100	20	680	875	260	6500	990	1130	1700	100	380

RoHS Pb LA Varistor Series

Device Ratings and Specifications (Continued)

RoHS Pb LEAD-FREE AND RoHS COMPLIANT MODELS		STANDARD MODELS		MODEL SIZE DISC DIA. (mm)	MAXIMUM RATING (85°C)				SPECIFICATIONS (25°C)				
					CONTINUOUS		TRANSIENT						
					V_{RMS}	V_{DC}	ENERGY 10 x 1000µs	PEAK CURRENT 8 x 20µs	VARISTOR VOLTAGE AT 1mA DC TEST CURRENT		MAXIMUM CLAMPING VOLTAGE 8 x 20µs		TYPICAL CAPACITANCE f = 1MHz
PART NUMBER	BRANDING	PART NUMBER	BRANDING		$V_{M(AC)}$	$V_{M(DC)}$	W_{TM}	I_{TM}	V_{NOM} MIN	V_{NOM} MAX	V_C	I_{PK}	C
					(V)	(V)	(J)	(A)	(V)		(V)	(A)	(pF)
V660LA10P	P660L	V660LA10	660L	10	660	850	70	2500	940	1210	1820	25	70
V660LA50AP	P660L50	V660LA50A	660L50	14	660	850	140	4500	940	1210	1820	50	200
V660LA100BP	P660L100	V660LA100B	660L100	20	660	850	250	6500	940	1100	1650	100	400
V1000LA80AP	P1000L8	V1000LA80A	1000L80	14	1000	1200	220	4500	1425	1800	2700	50	130
V1000LA160BP	P1000L16	V1000LA160B	1000L160	20	1000	1200	360	6500	1425	1600	2420	100	250

NOTE: Average power dissipation of transients not to exceed 0.25W, 0.4W, 0.6W or 1W for model sizes 7mm, 10mm, 14mm and 20mm, respectively.

Power Dissipation Ratings

Should transients occur in rapid succession, the average power dissipation is the energy (watt-seconds) per pulse times the number of pulses per second. The power so developed must be within the specifications shown on the Device Ratings and Specifications table for the specific device. The operating values of a MOV need to be derated at high temperatures as shown in Figure 1. Because varistors only dissipate a relatively small amount of average power they are not suitable for repetitive applications that involve substantial amounts of average power dissipation.

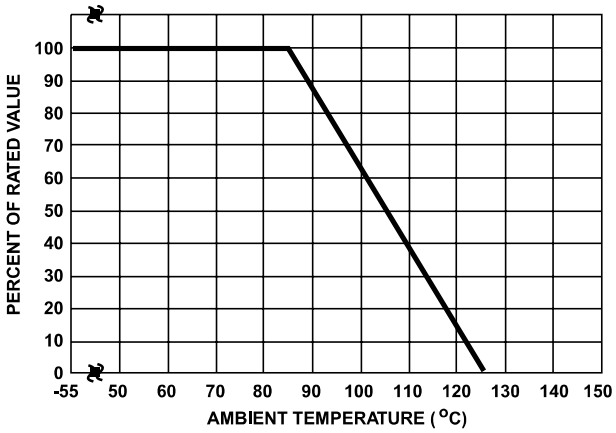

FIGURE 1. CURRENT, ENERGY AND POWER DERATING CURVE

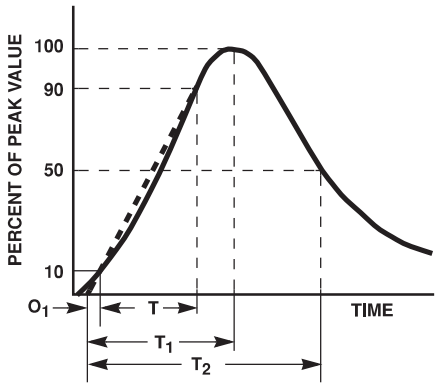

O_1 = Virtual Origin of Wave
T = Time From 10% to 90% of Peak
T_1 = Virtual Front time = 1.25 • t
T_2 = Virtual Time to Half Value (Impulse Duration)
Example: For an 8/20µs Current Waveform:
8µs = T_1 = Virtual Front Time
20µs = T_2 = Virtual Time to Half Value

FIGURE 2. PEAK PULSE CURRENT TEST WAVEFORM

RoHS Pb LA Varistor Series

Transient V-I Characteristics Curves

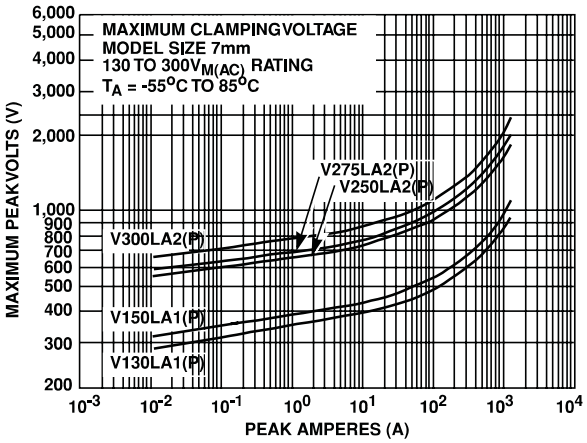

FIGURE 3. CLAMPING VOLTAGE FOR V130LA1(P) - V300LA2(P)

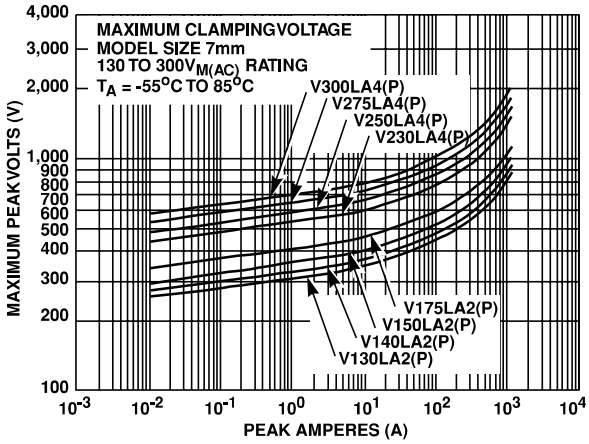

FIGURE 4. CLAMPING VOLTAGE FOR V130LA2(P) - V300LA4(P)

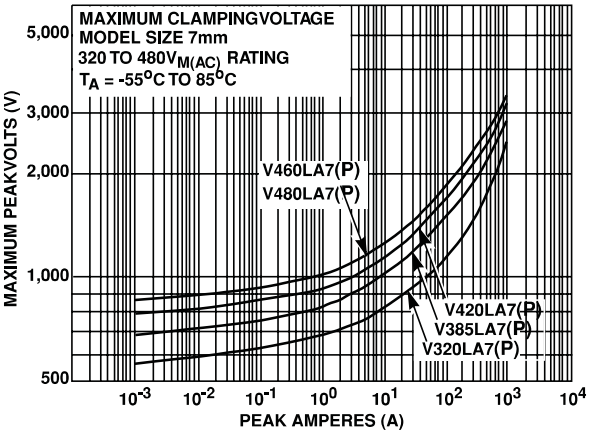

FIGURE 5. CLAMPING VOLTAGE FOR V320LA7(P) - V480LA7(P)

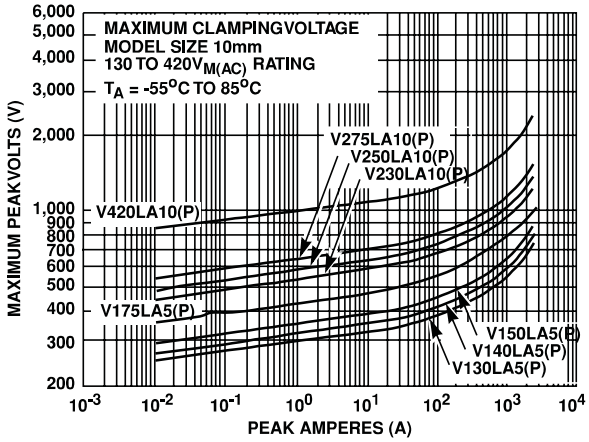

FIGURE 6. CLAMPING VOLTAGE FOR V130LA5(P) - V420LA10(P)

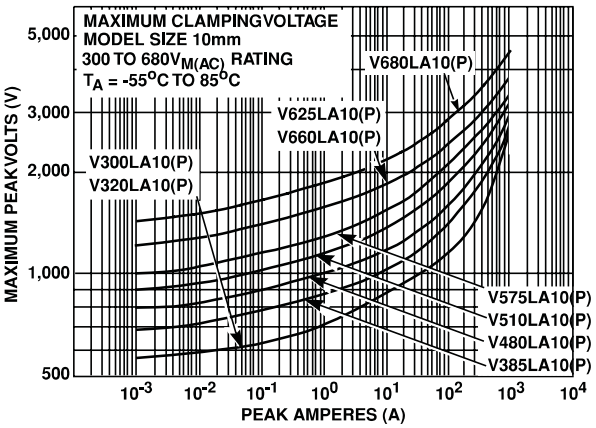

FIGURE 7. CLAMPING VOLTAGE FOR V300LA10(P) - V680LA10(P)

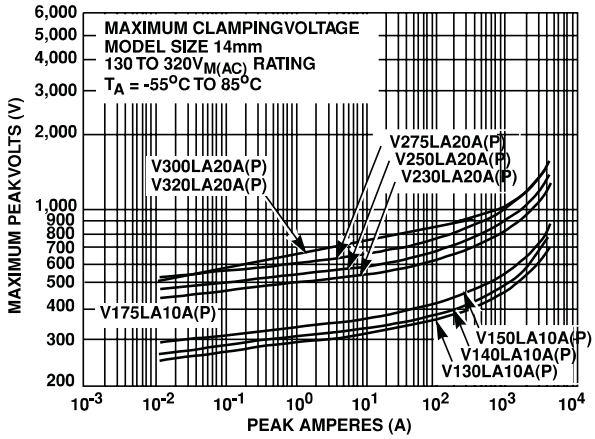

FIGURE 8. CLAMPING VOLTAGE FOR V130LA10A(P) - V320LA20A

RoHS Pb LA Varistor Series

Transient V-I Characteristics Curves (Continued)

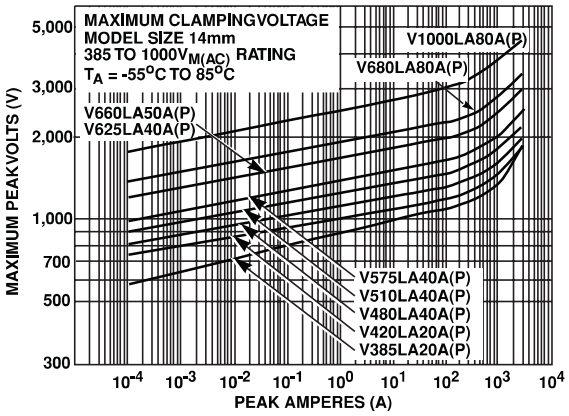

FIGURE 9. CLAMPING VOLTAGE FOR V385LA20A(P)-V1000LA80A(P)

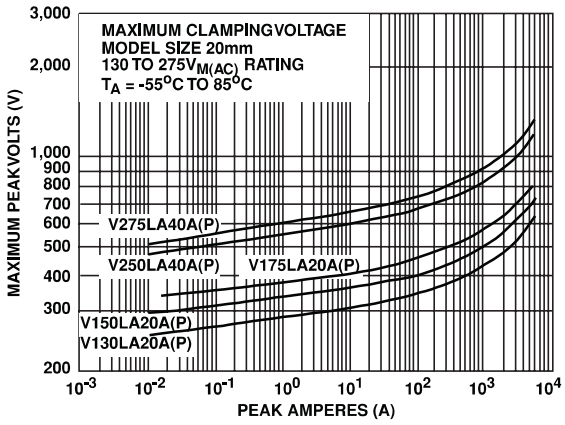

FIGURE 10. CLAMPING VOLTAGE FOR V130LA20A(P)-V275LA40A(P)

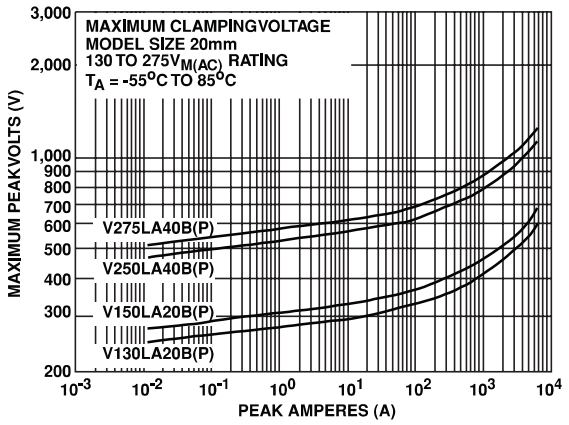

FIGURE 11. CLAMPING VOLTAGE FOR V130LA20B(P)-V275LA40(P)

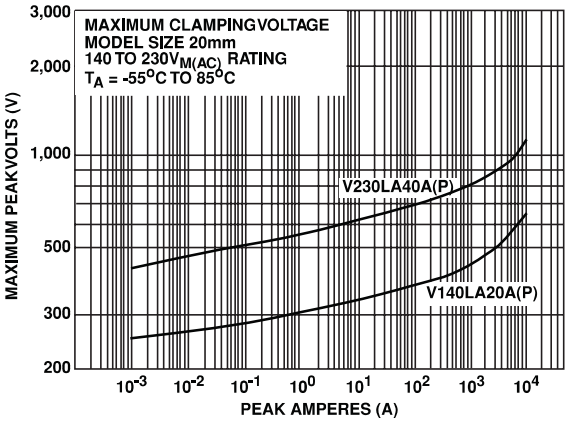

FIGURE 12. CLAMPING VOLTAGE FOR V140LA20A(P)-V230LA40A(P)

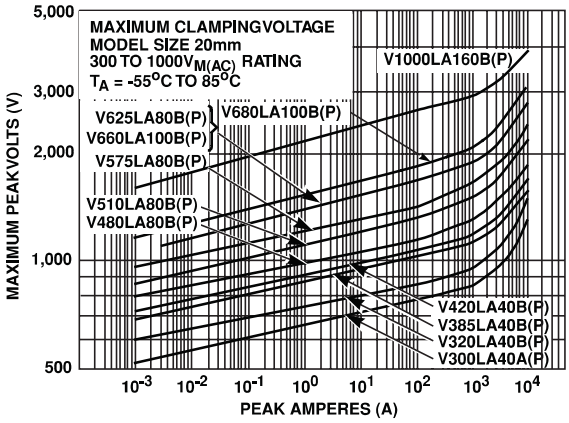

FIGURE 13. CLAMPING VOLTAGE FOR V300LA40A-V1000LA160B

RoHS Pb LA Varistor Series

Pulse Rating Curves

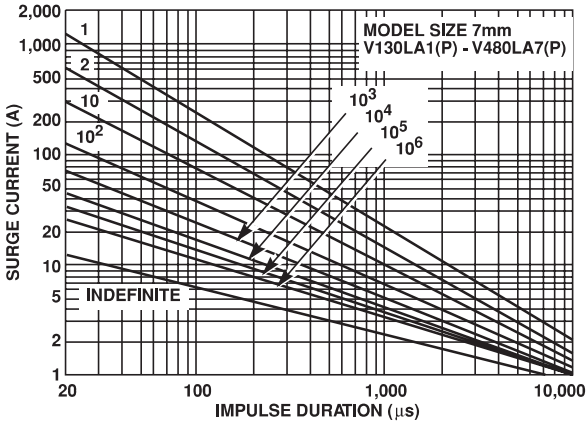

FIGURE 14. SURGE CURRENT RATING CURVES FOR V130LA1(P) - V480LA7(P)

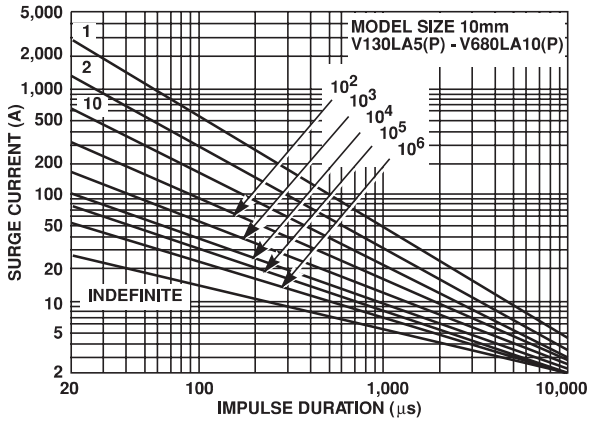

FIGURE 15. SURGE CURRENT RATING CURVES FOR V130LA5(P) - V680LA10(P)

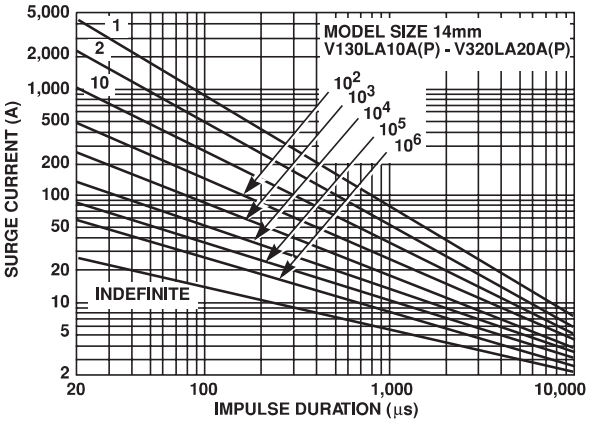

FIGURE 16. SURGE CURRENT RATING CURVES FOR V130LA10A(P) - V320LA20A(P)

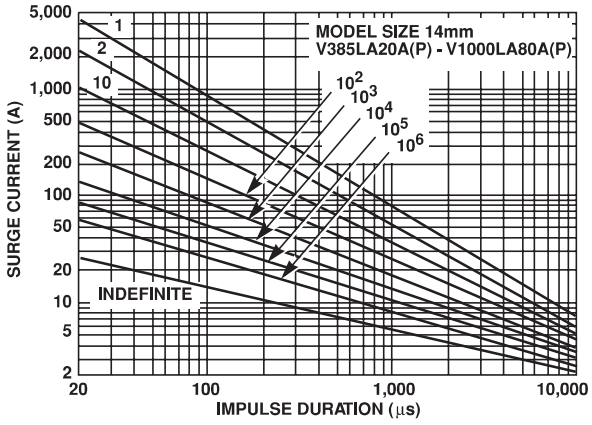

FIGURE 17. SURGE CURRENT RATING CURVES FOR V385LA20A(P) - V1000LA80A(P)

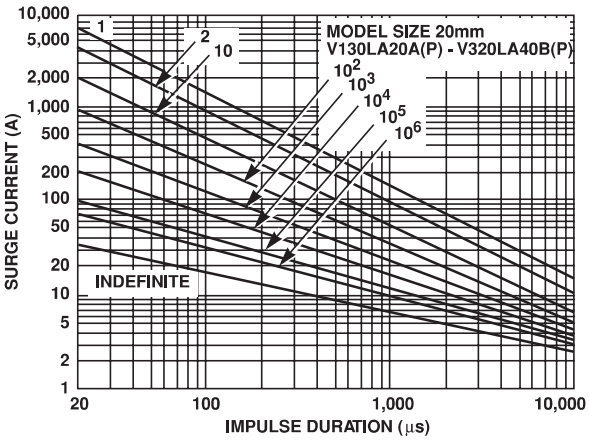

FIGURE 18. SURGE CURRENT RATING CURVES FOR V130LA20A(P) - V320LA40B(P)

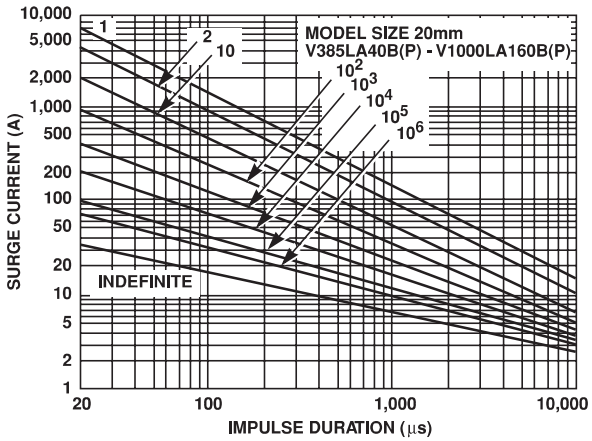

FIGURE 19. SURGE CURRENT RATING CURVES FOR V385LA40B(P) - V1000LA160B(P)

NOTE: If pulse ratings are exceeded, a shift of $V_{N(DC)}$ (at specified current) of more than ±10% could result. This type of shift, which normally results in a decrease of $V_{N(DC)}$, may result in the device not meeting the original published specifications, but does not prevent the device from continuing to function, and to provide ample protection.

RoHS Pb LA Varistor Series

Tape and Reel Specifications

7mm Devices

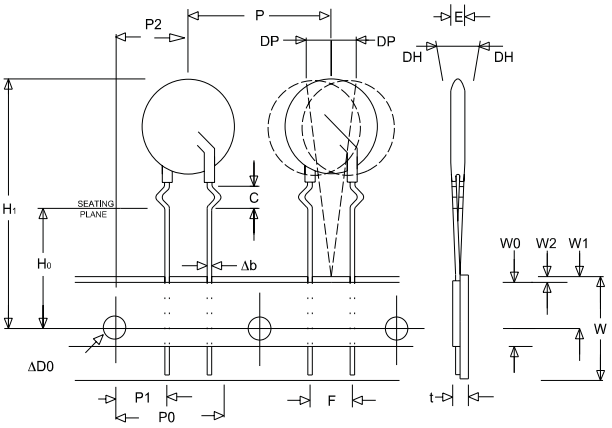

Crimped Leads "LT"

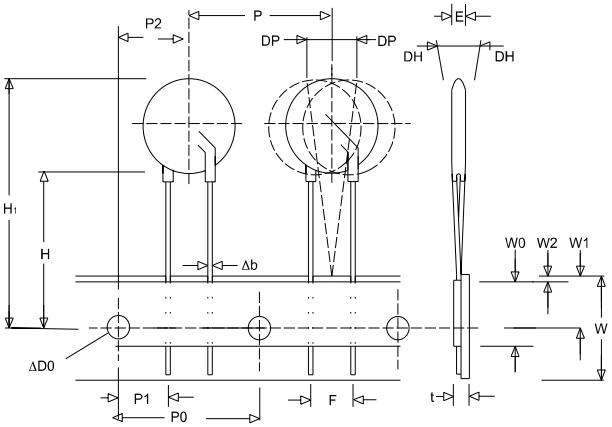

Straight Leads "LS"

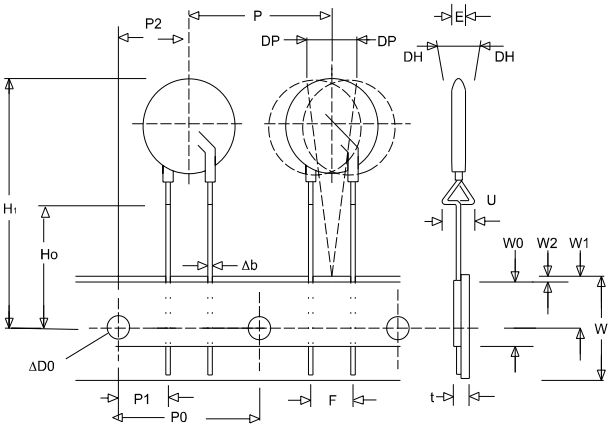

Under-crimped Leads "LU"

10, 14 and 20mm Devices

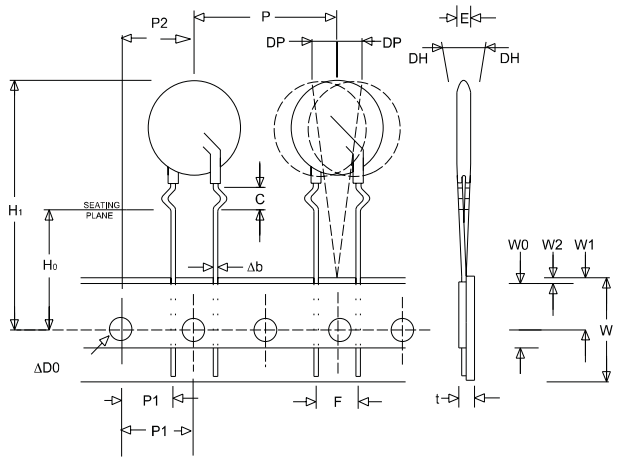

Crimped Leads "LT"

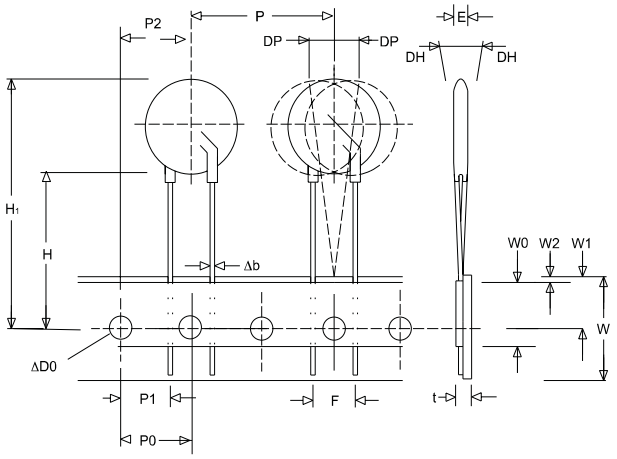

Straight Leads "LS"

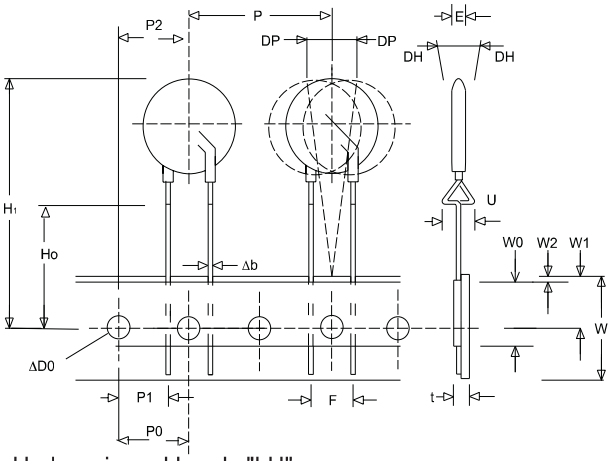

Under-crimped Leads "LU"

RoHS Pb LA Varistor Series

SYMBOL	PARAMETER	MODEL SIZE			
		7mm	10mm	14mm	20mm
P	Pitch of Component	12.7 ± 1.0	25.4 ± 1.0	25.4 ± 1.0	25.4 ± 1.0
P_0	Feed Hole Pitch	12.7 ± 0.2	12.7 ± 0.2	12.7 ± 0.2	12.7 ± 0.2
P_1	Feed Hole Center to Pitch	3.85 ± 0.7	8.85 ± 0.7	8.85 ± 0.7	8.85 ± 0.7
P_2	Hole Center to Component Center	6.35 ± 0.7	12.7 ± 0.7	12.7 ± 0.7	12.7 ± 0.7
F	Lead to Lead Distance	5.0 ± 0.8	7.5 ± 0.8	7.5 ± 0.8	7.5 ± 0.8
h	Component Alignment	2.0 Max	2.0 Max	2.0 Max	2.0 Max
W	Tape Width	18.0 + 1.0 18.0 - 0.5	18.0 + 1.0 18.0 - 0.5	18.0 + 1.0 18.0 - 0.5	18.0 + 1.0 18.0 - 0.5
W_0	Hold Down Tape Width	12.0 ± 0.3	12.0 ± 0.3	12.0 ± 0.3	12.0 ± 0.3
W_1	Hole Position	9.0 + 0.75 9.0 - 0.50	9.0 + 0.75 9.0 - 0.50	9.0 + 0.75 9.0 - 0.50	9.0 + 0.75 9.0 - 0.50
W_2	Hold Down Tape Position	0.5 Max	0.5 Max	0.5 Max	0.5 Max
H	Height from Tape Center to Component Base	18.0 + 2.0 18.0 - 0.0	18.0 + 2.0 18.0 - 0.0	18.0 + 2.0 18.0 - 0.0	18.0 + 2.0 18.0 - 0.0
H_0	Seating Plane Height	16.0 ± 0.5	16.0 ± 0.5	16.0 ± 0.5	16.0 ± 0.5
H_1	Component Height	32.0 Max	36.0 Max	40.0 Max	46.5 Max
D_0	Feed Hole Diameter	4.0 ± 0.2	4.0 ± 0.2	4.0 ± 0.2	4.0 ± 0.2
t	Total Tape Thickness	0.7 ± 0.2	0.7 ± 0.2	0.7 ± 0.2	0.7 ± 0.2
U	Under-crimp Width	8.0 Max	8.0 Max	8.0 Max	8.0 Max
p	Component Alignment	3° Max 1.00mm	3° Max 1.00mm	3° Max 1.00mm	3° Max

NOTE: Dimensions are in mm.

Tape and Reel Data

- Conforms to ANSI and EIA specifications
- Can be supplied to IEC Publication 286-2
- Radial devices on tape are supplied with crimped leads, straight leads, or under-crimped leads
- 7mm parts are available on tape and reel up to 480 VAC only
- 10mm parts are available on tape and reel up to 510 VAC only
- 14mm and 20mm parts are available on tape and reel up to 550 VAC only

RoHS Pb LA Varistor Series

Tape and Reel Ordering Information

Crimped leads are standard on LA types supplied in tape and reel and are denoted by the model letter "T". Model letter "S" denotes straight leads and letter "U" denotes special under-crimped leads.

Example:

STANDARD MODEL	CRIMPED LEADS	STRAIGHT LEADS	UNDER-CRIMPED LEADS
V130LA2	V130LT2	V130LS2	V130LU2

Standard Bulk Pack Quantity

VARISTOR VOLTAGE MODEL	STANDARD BULK PACK QUANTITY			
	VARISTOR MODEL SIZE			
	7mm	10mm	14mm	20mm
130-275	1500	1000	700	500
300-460	1500	700	600	400
510-680	1500	700	500	400

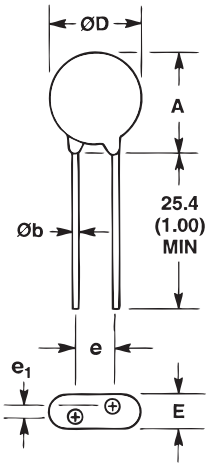

SYMBOL	VOLTAGE MODEL	VARISTOR MODEL SIZE							
		7mm		10mm		14mm		20mm	
		MIN	MAX	MIN	MAX	MIN	MAX	MIN	MAX
A	V130LA- V320LA	- -	12 (0.472)	- -	16 (0.630)	- -	20 (0.787)	- -	26.5 (1.043)
	V385LA- V1000LA	- -	13 (0.0512)	- -	17 (0.689)	- -	20.5 (0.807)	- -	28 (1.102)
ØD	All	- -	9 (0.354)	- -	12.5 (0.492)	- -	17 (0.669)	- -	23 (0.906)
e	All	4 (0.157)	6 (0.236)	6.5 (0.256)	8.5 (0.335)	6.5 (0.256)	8.5 (0.335)	6.5 (0.256) (Note 2)	8.5 (0.335) (Note 2)
e_1	V130LA- V320LA	1.5 (0.059)	3.5 (0.138)	1.5 (0.059)	3.5 (0.138)	1.5 (0.059)	3.5 (0.138)	1.5 (0.059)	3.5 (0.138)
	V385A- V1000LA	2.5 (0.098)	5.5 (0.217)	2.5 (0.098)	5.5 (0.217)	2.5 (0.098)	5.5 (0.217)	2.5 (0.098)	5.5 (0.217)
E	V130LA- V320LA	- -	5.6 (0.220)	- -	5.6 (0.220)	- -	5.6 (0.220)	- -	5.6 (0.220)
	V385LA- V510LA	- -	7.3 (0.287)	- -	7.3 (0.287)	- -	7.3 (0.287)	- -	7.3 (0.287)
	V550LA- V680LA	- -	8.3 (0.327)	- -	8.3 (0.327)	- -	8.3 (0.327)	- -	8.3 (0.327)
	V1000LA	- -	- -	- -	- -	- -	10.8 (0.425)	- -	10.8 (0.425)
Øb	All (Note 3)	0.585 (0.023)	0.685 (0.027)	0.76 (0.030)	0.86 (0.034)	0.76 (0.030)	0.86 (0.034)	0.76 (0.030) (Note 2)	0.86 (0.034) (Note 2)

NOTES:

1. Dimensions in millimeters, inches in parentheses.
2. 10mm (9mm min, 11mm Max) ALSO AVAILABLE; See Additional Lead Style Options
3. 1000V parts supplied with lead wire of diameter 1.00 ± 0.05 (0.039 ± 0.002).

RoHS Pb LA Varistor Series

Additional Lead Style Options

Radial lead types can be supplied with combination preformed crimp and trimmed leads. This option is supplied to the dimensions shown.

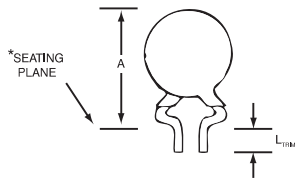

*Seating plane interpretation per IEC-717

CRIMPED AND TRIMMED LEAD

SYMBOL	VARISTOR MODEL SIZE							
	7mm		10mm		14mm		20mm	
	MIN	MAX	MIN	MAX	MIN	MAX	MIN	MAX
A	- -	15 (0.591)	- -	19.5 (0.768)	- -	22.5 (0.886) (NOTE 2)	- -	29.0 (1.142)
L_{TRIM}	2.41 (0.095)	4.69 (0.185)	2.41 (0.095)	4.69 (0.185)	2.41 (0.095)	4.69 (0.185)	2.41 (0.095)	4.69 (0.185)

NOTE:
1. Dimensions in millimeters, inches in parentheses.
2. 'A' max for V1000LC80A(P) = 24.00 (0.945")

- To order this crimped and trimmed lead style, standard radial type model numbers are changed by replacing the model letter "A" with "C".

Example:

STANDARD CATALOG MODEL	ORDER AS:
V130LA2	V130LC2

For crimped leads without trimming and any variations to the above, contact Littelfuse.

- For 10/±1mm lead spacing on 20mm diameter models only; append standard model numbers by adding "X10".

Example:

STANDARD CATALOG MODEL	ORDER AS:
V130LA20A	V130LA20AX10

LA series varistors for Hi-Temperature operating conditions:

- Phenolic Coated LA Series devices are available with improved maximum operating maximum temperature 125°C.
- These devices also have improved temperature cycling performance capability.
- Ratings and Specifications are as per standard LA Series except Hi-Pot encapsulation Isolation Voltage Capability = 500V.
- To order: add X1347 to part number (e.g. V230LA20AX1347)
- Marked identifier will contain 'P' to denote Phenolic.
- These devices are not UL, CSA, VDE or CECC certified.
- Contact factory for further details.

Ordering Information

LA series Varistors are shipped standard in bulk pack with straight leads and lead spacing outlined in the package dimensions on page 4-13. Contact your Littelfuse sales representative to discuss the non-standard options outlined below.

For Lead-free and RoHS compliant parts add the letter 'P' after the base part number and before any option as shown in the ordering example below.
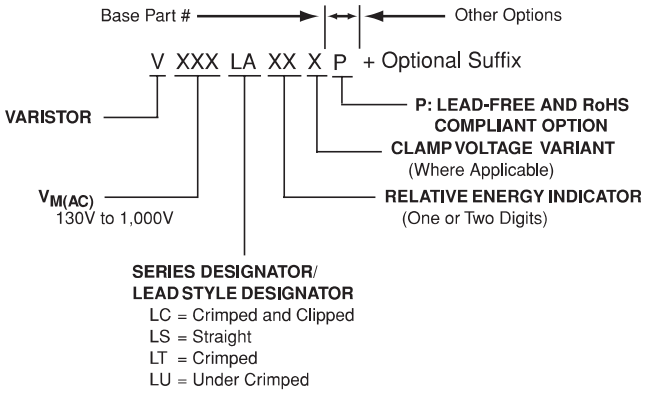
ex: V130LA2P
V420LA20APX1347