THE EUROPEAN MASTER SELECTION 1982

The total number of standard Semiconductor products available from Motorola exceeds 15 000 device types. To most of our customers this total presents an overwhelming choice.

The European Master Selection lists approximately 4000 preferred devices that respond to the majority of customer needs in Europe.

Nevertheless, please note that all our other products are also available, and details can be obtained on request from your Motorola Sales Office or nearest Distributor.

This information has been carefully checked and is believed to be entirely reliable. However, no responsibility is assumed for inaccuracies. Motorola reserves the right to make changes to any products herein to improve reliability, function or design. Motorola does not assume any liability arising out of the application or use of any product or circuit described herein. No license is conveyed under patent rights in any form. When this document contains information on a new product, specifications herein are subject to change without notice.

© MOTOROLA INC. 1982
„All rights reserved"

Printed in Switzerland

TRADEMARKS

BASIC-M, BET, Bullseye, Chiro-Scan, CRTBUG, Designer's, DISCACHE, Duowatt, Econocap, EpiBase, Epicap, EXbug, EXORbug, EXORbus, EXORciser®, EXORdisk, EXORmacs, EXORprint, EXORset, EXORtape, EXORterm, FIVEBUG, Isothermal, Iso-Volts, JBUG, LILbug, LINK, Link II, MACROCELL I, MACROCELL II, Macro-T, Macro-X, MACSbug, MATEC, MDOS, MDTL, MECL, MECL 10 000, MECL II, MECL III, MECL10KH, MHTL, MICRObug, Micromodule, Micro-T, MIDA, MIKbug or MIKBUG, MiniBloc, MINIbug or MINIBUG, Mini-T, MOKEP, MOSAIC I, MOSAIC II, MOTEST, MOZORB, MTTL, Multi-Pak, ONEbug, PowerBase, PRObug, QUIL, RMS09, RMS68K, SOIC, Straightshooter, SUPERBRIDGE, SUPERbug, SUPERio, SUPERlead, SUPERlink, SUPERload, SUPERmon, SUPERPOWER, SUPERutil, Surmetic, Switchmode, SYMbug, TEXbug, Thermopad, Thermopad II, Thermowatt, TMOS, TRIMFET, TV BUG, Unibloc, Uniwatt, VERSAbug, VERSAbus, VERSAdos, VERSAmodule, VERSAnet, XDOS, X-ducer

TABLE OF CONTENTS

MICROCOMPUTER DEVELOPMENT SYSTEMS 1

BOARD LEVEL PRODUCTS 2

MOS INTEGRATED CIRCUITS
- Microcomputer Components 3
- Memory Circuits 4
- CMOS Logic Circuits 5

BIPOLAR INTEGRATED CIRCUITS
- Linear Circuits 6
- Linear Interface Circuits 7
- LSI 8
- Bipolar Memories 9
- Logic Circuits 10

TELECOMMUNICATION CIRCUITS 11

CONSUMER LINEAR CIRCUITS
- TV and Radio 12
- Appliance 13
- Automotive 14

DISCRETE COMPONENTS
- Power Transistors—Bipolar and MOSFETs 15
- Thyristors and Triggers 16
- Rectifiers 17
- Zeners 18
- Small-Signal Transistors 19
- RF Transistors and Modules 20
- Tuning and HF Diodes 21
- Optoelectronics 22

PACKAGED DEVICES FOR HYBRID CIRCUITS 23

HI-REL PROGRAM 24

Alphanumeric Index 25

Microcomputer Development Systems

. . . an extensive array of hardware and software to meet a wide range of customer needs.

Table of Contents

	Page
The EXORmacs System	1- 2
The EXORciser System	1- 6
The EXORterm	1- 6
EXORciser/EXORterm Conversion Systems	1- 8
The EXORset and Other Low-Cost Systems	1- 9
Software Support for 8-bit Systems	1-10
Non-Resident Software	1-11
Peripherals	1-12

EXORmacs

M68000 Development System

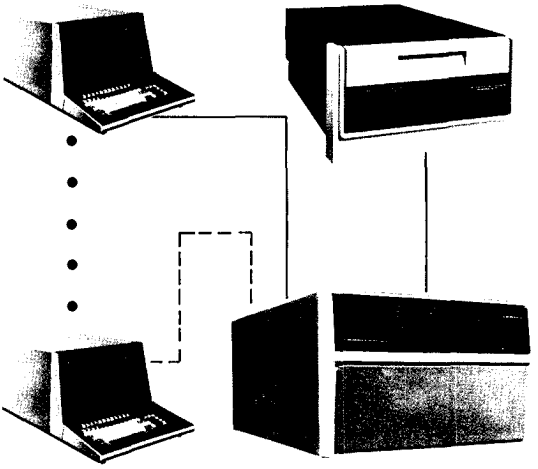

- Complete Development System for MC68000 MPU
- Up to Eight User Stations
- Multi-Processor Bus Arbitration
- Multitasking Real-Time Operating System
- Resident Pascal High-Level Language
- Diagnostic Firmware
- Up to 192 Megabyte Fixed/Removable Hard Disk
- And Up To 2 Megabyte Dual Drive Floppy Disk
- Provisions For Future 32-Bit Microprocessors
- Optional Cross-Development Software For 8-Bit MPUs

EXORmacs is a state-of-the-art development system for designing and developing advanced 16-bit microprocessor based systems using Motorola families of microprocessors, microcomputers, and peripheral parts. It is also ideally suited for developing applications using the VERSAmodule family of 16-bit board level application products and accessories.

Designed for flexibility and ease of use, EXORmacs takes advantage of the power and features of the MC68000 microprocessor unit (MPU). EXORmacs reduces system cost and development time by incorporating features which support 16-bit and future 32-bit microprocessor designs, as well as providing high-level language support through Pascal. With additional terminals and multiple-channel communications modules, up to eight users may simultaneously develop M68000 programs.

EXORmacs Basic System Configurations

M68KMACSH2

EXORmacs Hard Disk Based Basic System — 220 Volts

M68KMACSF2

EXORmacs Floppy Disk Based System — 220 Volts

Each system includes:

- Hardware Chassis — with Power Supply and 15-slot Backplane
  - Resident Module Complement
  - MC68000 MPU/MMU Module
  - DEbug Module
  - Two 128K Byte Dynamic RAM Modules
  - Disk Controller Module
    - Universal Disk Controller (with M68KMACSH2)
    - or
    - Floppy Disk Controller (with M68KMACSF2)
- Software
  - Operating System (VERSAdos-E)
  - CRT Editor
  - Macro Assembler
  - Linkage Editor
  - Pascal Compiler
  - Symbolic Debug
- Peripherals
  - EXORterm 155 Display Console
  - 16/16 Megabyte Hard Disk
  - or
  - 1 Megabyte Floppy Disk

EXORmacs Expansion Components

For Multiuser Applications

Description	Part Number
Display Console (one per user)	M68SXD10255
Multichannel Communications Module (supports up to four users)	M68KMCCM
128K Byte Dynamic RAM Module	M68K128DP
Hard Disk System 16 Mbyte removable/ 16 Mbyte fixed 16 Mbyte removable/ 80 Mbyte fixed	 M68KHDS32-2 M68KHDS96-2
Hard Disk Expansion Drive 16 Mbyte removable/ 16 Mbyte fixed 16 Mbyte removable/ 80 Mbyte fixed	 M68KHDE32-2 M68KHDE96-2
Floppy Disk System 1 Mbyte	M68KFD2102
Floppy Disk Expansion Drive 1 Mbyte	M68KFD2102E
Remote Development Station	M68KRDS2-1

For System Expansion

M68000 User System Emulation (USE) Module	M68KUSE
64K Byte Dynamic RAM Module	M68K64DP
32K Byte Dynamic RAM Module	M68K32DP
VERSAbus Adapter Module	M68KVAM
VERSAbus Extender Module	M68KEXTM
VERSAbus Wirewrap Module	M68KWW
Real-time VERSAbus State Analyzer	M68KBSA
180 Characters Per Second Matrix Printer	M68PRT200N2

Single/Multiple User System Configurator

Step 1. Select number of concurrent terminals

Number of Users	Terminals	Multichannel Communications Modules MCCM #1	MCCM
1	First EXORterm 155 Included in BASIC SYSTEM		
2	Order 2nd EXORterm 155		
3	Order 3rd EXORterm 155		
4	Order 4th EXORterm 155	USE #1	
5	Order 5th EXORterm 155		
6	Order 6th EXORterm 155		USE #2
7	Order 7th EXORterm 155		
8	Order 8th EXORterm 155		

Step 2. Select mass storage

Number of Users	1 MB Floppy	2 MB Floppy	32 MB Drive (16/16)	32 MB Drive + 96 MB Drive (128 MB Total)	192 MB (Two-96 MB Drives)
1	Most Economical	Recommended	Recommended	For Future Growth and/or Large User Data Bases	
2	For Hard Disk-Based Systems Desiring Auxilliary Floppy Disk Storage				
3		Not Recommended			
4				Recommended	
5			Limited Space Per User		
6					
7					
8					

Step 3. Select memory (total bytes on-line RAM)

Number of Users	256K	384K	512K	640K	768K	896K	1M
1	Minimum						
2	Requirements Depend on User Activity	Recommended					
3			Recommended	Improves System Thruput	For Expansion		
4							
5							
6	Not Recommended			Recommended			
7							
8							

Modular Assemblies for EXORmacs Development Systems

Resident Modules

MPU Module

Contains the MC68000 MPU chip, its clock system, a four-segment Memory Management Unit (MMU), primary and secondary map switching logic, and firmware that provides module diagnostics. The MMU allows the system to allocate memory under control of the VERSAdos Operating System, and provides multitasking operation. This real-time multitasking operation system helps speed program development by allowing concurrent tasks.

DEbug Module

Houses MACSbug Firmware, bus arbitration logic, a parallel printer port, the RS-232C terminal port, and a downline load RS-232C host port.

256K Byte Dynamic Memory

Two 128K byte Dynamic RAM Modules provide EXORmacs with 128K 16-bit words of RAM, including byte parity. Parity is read during memory access, providing the MC68000 MPU with soft error status such that a memory re-try may be initiated. The base address may be set by the user through switch inputs. The chassis can support up to eight RAM modules providing the user with a megabyte of directly addressable resident memory.

Universal Disk Controller

The Universal Disk Controller supports up to two 96 megabyte hard disk subsystems and up to two megabytes of floppy disk mass storage. An MC68120 Intelligent Peripheral Controller handles data requests from the M68000 system, and provides self contained module diagnostics for the disk system. The use of this multiprocessing technique offers increased system performance. This yields more efficient utilization of multiple users time. An industry standard interface that provides a transfer rate of up to 1.25 megabytes/second is used. This controller is supplied with M68KMACSH2 only, and requires two EXORmacs card slots.

Floppy Disk Controller

The intelligent Floppy Disk Controller Module uses an MC6801 microcomputer to handle data requests from the M68000 system, and provides self-contained module diagnostics for the floppy disk. The use of this multiprocessing technique offers increased system performance, which results in more efficient utilization of the user's time. This controller requires one EXORmacs card slot, is supplied with the M68KMACSF2 only, and supports up to two megabytes of floppy disk mass storage.

System Expansion Modules

Multichannel Communications Module (MCCM) — M68KMCCM

An intelligent communications controller is required to provide the I/O interface between each user terminal and the EXORmacs chassis. The MCCM provides this interface for four users through individual serial RS-232C ports. It also provides a parallel printer port for these four users to share.

Each Communications Module will support four EXORterm 155's which provide editing and debug capabilities for EXORmacs.

For Expanding Systems Performance

VERSAbus Adapter Module — M68KVAM

The VERSAbus Adapter Module (VAM) provides an interface between the extensive line of 8-bit EXORbus Modules and the 16-bit VERSAbus. The EXORbus module can be mechanically inserted into a VAM. This enables VERSAbus to use various I/O modules, memory and Micromodules designed for the EXORbus. By using two VAMs at one address, a 16-bit parallel data transfer capability is possible.

User System Emulator Module — M68KUSE

Working with EXORmacs, the MC68000 User System Emulator (USE) provides a complete software and hardware systems development capability. It extends the debug power of the EXORmacs system into the user target system, and allows the user to specify whether the development system or his own target system should respond to a given address. The User System Emulator allows evaluation of prototype system hardware and software in the earliest stages of development, even before target system prototype memory and input/output facilities are built.

VERSAbus Dynamic Memory Modules

VERSAbus Dynamic Memory Modules offer a wide choice of RAM storage elements. These memory modules are supplied with byte parity, providing auto re-try on soft errors in the EXORmacs Development System.

128K Byte Dynamic RAM with parity (M68K128DP)
64K Byte Dynamic RAM with parity (M68K64DP)
32K Byte Dynamic RAM with parity (M68K32DP)

Auxiliary Modules

The VERSAbus ***Extender Module*** provides a convenient means for the routine testing or trouble-shooting of EXORmacs modules. The module under test may be mechanically inserted into the Extender Module card guides, thus raising it to a convenient level for servicing.

The VERSAbus ***Wirewrap Module*** permits the user to construct and incorporate his custom circuits into an EXORmacs system. Features include standard pin spacing for 14, 16, 18, 22, 40 and 64-pin wirewrap sockets.

M68000 System Development Software

The M68000 software development package provides designers with cost-effective tools for application design and implementation. A versatile CRT-oriented Text Editor aids in program preparation and modification. Pascal, FORTRAN (optional) and a Structured Macro Assembler permit the designer to choose the language or languages that best fit his requirements.

A flexible Linkage Editor permits development to proceed in a modular top-down process by combining separately-written modules, into an executable unit. Finally, a powerful symbolic debugger aids the designer during program checkout, permitting debugging at the source level even for those programs written in multiple languages.

Real-Time Operating System

The M68000 Real-time Operating System (VERSAdos) provides complete real-time, multitask support for the EXORmacs User. Features included in the VERSAdos are:

- Real-time multitasking executive
- Device independent I/O
- Floppy and hard disk support
- Sequential, random, and index sequential file capabilities.

VERSAdos Utilities

VERSAdos Utilities provide valuable tools for creating and maintaining files. For example:

BACKUP creates a new copy of a diskette or cartridge with an exact image or a reorganization option. COPY allows individual files to be duplicated. LIST provides a method of examining the contents of a file. RENAME provides a means of changing a file name or protection code. A new disk is set up for VERSAdos with the INIT Utility. DELETE is used to eliminate files. DIRECTORY shows the user the names of files that are on a disk.

CRT Text Editor

The EXORmacs CRT-oriented Text Editor runs under the supervision of the Operating System and provides the capability to create and modify source programs. The editor supports both command and cursor editing, utilizing the cursor, control characters and function keys of the EXORterm 155.

Structured Assembler

The M68000 Structured Macro Assembler translates source statements into relocatable machine code, assigns storage locations to instructions and data, performs auxiliary assembler actions designated by the programmer, and optionally produces a cross-reference listing. The M68000 resident assembler includes macro and conditional assembly capabilities plus certain control constructs that permit structured programming at the assembly language level.

Pascal Compiler

Pascal is a block structured high order language that promotes good programming technique, is self-documenting, and simplifies program writing. Extensions provided by Motorola include: Absolute Address specification for variables, alphanumeric labels, string operations, EXIT statement, OTHERWISE clause as part of the CASE statement, non-decimal integers, optional run-time error checking, run-time file assignment, plus separate compilation and linking of individual modules. The code produced is ROMable, re-entrant, and position independent.

FORTRAN Compiler (Optional)

Motorola's FORTRAN exceeds ANSI FORTRAN 77 subset language specification, providing real-time processing capabilities. FORTRAN's strengths are its arithmetic and mathematical capabilities. The FORTRAN Compiler generates relocatable object code which is ROMable, position independent, and permits linkage to assembly language routines.

Linkage Editor

The Linkage Editor provides the capability of merging two or more separately-compiled object units into a loadable object module file. It determines segment attributes, calculates address space, searches libraries to resolve external references, and relocates object code. The Linkage Editor provides a report that contains a Module Map, a table of externally defined symbols, and a list of any unresolved or multiply-defined symbols.

Symbolic Debug

The SYMbug debugging package is used to debug programs written in assembly language or any of Motorola's high-level languages. Information provided by the language processors and Linkage Editor permits the user, via SYMbug, to:

- Symbolically examine, insert, and modify program elements such as instructions, numeric values, coded information.
- Symbolically control execution, including the insertion of breakpoints.
- Symbolically search programs and data for specific elements and sub-elements.
- Symbolically create Macro Commands that allow user-defined formats and commands.

EXORciser For 8-Bit Prototype Development

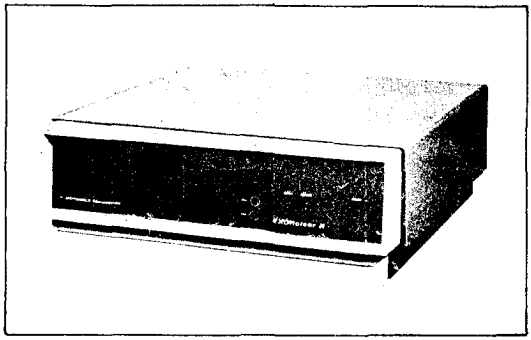

The EXORciser is an expandable development system that allows emulation of any 8-bit Motorola microprocessor or microcomputer configuration, from the simplest to the most elaborate. It comes with an MPU Module that provides system timing and a DEbug Module that contains system firmware. Both MC68B00 or MC68B09 MPU versions are offered in the EXORciser Development System.

With optional accessories, the EXORciser design and diagnostic functions can be extended to other members of the Motorola family of microprocessors and microcomputers.

The EXORciser with a USE (User System Emulator) option can be used to test and evaluate equipment external to its chassis. By removing the microprocessing unit from the user's system and connecting the USE cable from the EXORciser into the MPU's socket, the EXORciser with its EXbug firmware can be used to debug and troubleshoot microprocessor systems.

The basic EXORciser consists of a rugged cabinet with a built-in power supply, and a prewired bus-oriented 14-slot Backplane with MPU and DEbug Modules. Together these elements form a development microcomputer, with the capability of adapting the unit to a specific design problem by adding optional I/O and memory modules. Additional Motorola memory modules for the EXORciser can be selected to suit varying system configurations; for example, to meet the increased memory requirements of sophisticated high order language based systems. The concept of add-on modules permits the user to match the functional requirements of the systems being developed. Using one slot each for a floppy disk and printer function, ten slots remain for memory and I/O expansion. The EXORciser is a system that is never out-of-date, being at all times upgradable when new and expanded microcomputer functions become available.

EXORterm 220 for Program Development

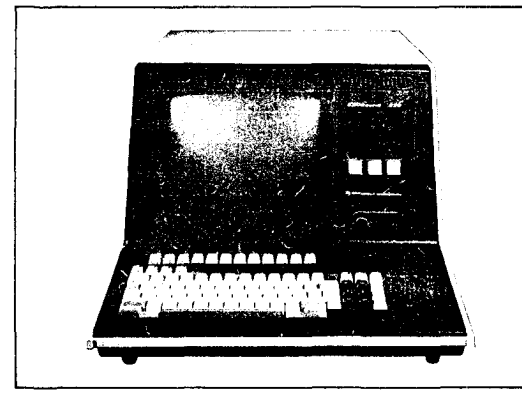

The EXORterm 220 Development System adds video display and keyboard entry facilities to the capabilities of the basic EXORciser, making it particularly useful for software development. It consists of an integral card cage that contains an MPU and DEbug Module, with provision for six more standard EXORciser modules for system design flexibility.

EXORterm 220 contains a high-quality CRT with a full 1920-character screen and easily readable 7 x 9 ASCII characters. A 59-key detachable keyboard incorporates 12 special keys that can be encoded to invoke functions unique to a user's system. Its serial communications link has speeds to 9600 baud for information exchange.

The EXORciser/EXORterm card cage is compatible with that of the EXORciser, thereby offering the EXORterm user the same wide selection of accessory boards. When the system is used in conjunction with a floppy disk system and printer, two of the six available Backplane slots are devoted to interface modules for these peripherals, leaving four slots for the expansion of memory, I/O, and/or accessory functions.

EXORciser/EXORterm Options for System Configuration

It would be convenient to own a single, complete development system — one that would help design every microcomputer that could conceivably be required, from the smallest to the largest. But that would be expensive. That's why the EXORciser contains only the basic electronics required for all systems, regardless of size. The remaining circuitry is offered as modular options, to be purchased if and when demanded by system design. This expandable feature assures maximum utility at low cost. It also eliminates equipment obsolescence, since new modules with greater capabilities are constantly being developed as microcomputer technology advances.

EXORcisers and EXORterms are offered without memory to emphasize flexibility in meeting individual configurations. The memory, I/O, and auxiliary modules expand the development system capabilities over a wide range of varying design requirements.

The Basic System

Description	EXORciser	EXORterm 220
For MC6800 System Development with USE option	M6800 EXOR32U M6800 EXOR56U	M6800 TERM56 –
For MC6809 System Development	M6809 EXOR32 M6809 EXOR56	M6809 TERM56
Add-on Module to convert MC6809 EXORciser to USE capability	M6809USE	–

EXORciser/EXORterm Expansion Modules

Memory Modules	Number of Bytes					
	2K	8K	16K	32K	18K	64K
Static RAM	X					
Parity (2 MHz)		X	X			
Dynamic RAM		X				
Parity (2 MHz)			X	X	X	X
Hidden Refresh (1 MHz)			X	X	X	X
EPROM/RAM (unpopulated)			X			

I/O Add-Ons

PIA Module **MEX6821-2**
Four 8-bit I/O ports, for parallel-oriented peripherals*

ACIA Module **MEX6850**
Asynchronous communication

ACIA/SSDA Module **MEX6850-2**
Asynchronous/ synchronous communication*

Peripherals for System Enhancement

(for descriptions, see page 52).

Display Terminal, EXORterm 155	Printer: PRT 200

Support Modules

CRT Controller **MEX6845**
Provides the interface to raster scan CRT displays for terminals in stand-alone or cluster configuration*

Data Link Controller **MEX6854**
Provides data communications interface for both primary and secondary stations in stand-alone, polling, and loop configurations*

General Purpose Interface Adapter **MEX68488**
Provides a means for controlling and moving data to and from complex systems of multiple instruments* using IEEE-488 communication protocol.

Auxiliary Modules

Wirewrap Module **MEX68WW**
For prototype development.

Extender Module **MEX68XT**
For access to any development module from outside the EXORciser chassis.

*up to 2 MHz capability.

Accessories for System Diagnosis and Manufacturing

The EXORciser/EXORterm and their basic options are very versatile development instruments. Through emulation of a user system, they take the guesswork out of hardware and software design. And with these additional modular options, they become highly sophisticated post-design centers.

SYSTEM ANALYZER **MEX68SA2 (6800) M6809SA (6809)**

This unique instrument can be used to enhance the capabilities of the EXORciser as a design tool, or as an independent, portable, low-cost unit for field service of bus-compatible equipment.

In field service applications, the System Analyzer derives operating power and I/O signals directly from the system under test. It can stop the system at any point in its program, step through the program, change the contents of the system memory, and monitor and record the MPU's operation during a selected portion of the program without shutting down the operation.

In EXORciser applications, it complements the system's inherent program development capabilities. In conjunction with the EXORciser and USE, it offers the most powerful combination of development and diagnostic tools available for microcomputer work.

PROM PROGRAMMER **M68PP4**

This module plugs into the EXORciser or EXORset and is compatible with EXbug firmware and disk operating systems. The PROM Programmer is designed to program a variety of MOS PROMs, EPROMs and bipolar PROMs. It can verify data from the PROM, transfer data from the PROM to the development system RAM memory, and transfer blocks of data from one memory location to another. Programming time depends upon the PROM used.

Software on MDOS and XDOS diskette for both M6800 and M6809-based systems is included with the PROM Programmer.

EXORciser/EXORterm Conversion Systems

Through hardware and corresponding software options, the EXORciser can be transformed into a dedicated design and evaluation tool for microprocessors such as the MC6801, MC6802 and MC68000.

MC6801 Development System **MEX6801**

This product upgrades M6800 or M6809 EXORcisers and EXORterms for development of MC6801-based systems. All three modes of MC6801 operation — single-chip, expanded multiplexed and expanded non-multiplexed — are supported by this system.

This system is fully compatible with all current EXORciser supporting hardware and software and includes the USE function. It allows real-time emulation of the MC6801 application hardware and facilitates the debugging of software.

MC6805 Family Development System **MEX6805, MEX6805R2**

These products adapt M6800 or M6809-based EXORcisers and EXORterms to the development of systems based on the MC6805P2 and MC6805R2/U2 microcomputers. Included in the support system are the printed circuit board module, extended cables for USE for both HMOS MC6805 versions, and an MDOS diskette containing the M6805 Cross Macro Assembler and FIVEbug (the system debug/monitor program).

A two-processor philosophy is utilized, in which an MC6805 microcomputer on the module operates in concert with an MC6800 or MC6809 microprocessing unit in the host EXORciser.

MC146805E2 Development System **MEX146805**

This 8-bit CMOS system provides an M6800 or M6809-based EXORciser with the capability to debug MC146805E2 applications in the actual hardware and software configuration of the user's final system.

It emulates all MC146805E2 inputs and examines all the corresponding outputs via software control, or controls the inputs and outputs via external user hardware. Thus, this development system offers an economical and expedient means for developing new applications prior to committing the programs to the final production masks. This system requires 24K bytes of RAM and an EXORdisk II or III in addition to the EXORciser or EXORterm.

MC141000/1200 Development System **MEX141000M**

This 4-bit CMOS system is functionally similar to the 8-bit CMOS system, except that it is designed for simulating the MC141000/1200 microcomputer on an M6800-based EXORciser. It also requires 24K bytes of RAM and EXORdisk.

MC6802/MC6846 Support Module **MEX6802-46**

The MC6802-6846 may be used with the EXORciser/EXORterm development tools to develop hardware and software for the MC6802 and MC6846 two-chip microcomputer. Later it can be used as the system microcomputer module. During development, the MC6802-MC6846 Module replaces the MPU Module in the EXORciser.

Low Cost Development and Evaluation Systems

EXORset 33

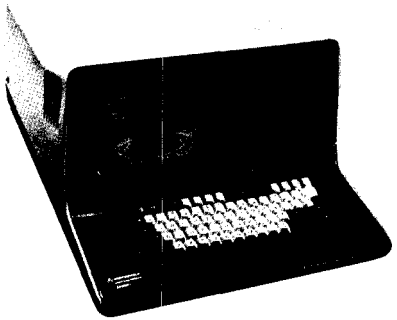

This very reasonably-priced, self-contained, desk top system provides a productive means of efficient and fast software development. EXORset fills the gap between low-cost evaluation kits and high-end development systems. EXORset offers these unique features in one system:

- MC6809 high-performance processor — The expanded instruction set, addressing modes and architecture of the MC6809 allows sophisticated programming techniques such as structured programming, position-independent codes, re-entrant routines, and real-time operation.
- Full ASCII keyboard with 16 user-assigned function keys.
- Dual mini-floppy disk drives and controller board — Together these drives provide 320K bytes of mass storage. Resident disk-drive firmware provides entry points for insertion of special disk handling routines.
- Dual double-sided, soft-sectored mini-diskettes.
- 9″ CRT display — 22 lines of 80 characters (or 16 lines of 40). Simultaneously displays a full 320 x 256 dot graphic image.
- 56K RAM and 12 sockets for 24K of EPROM/ROM.
- Complete software development package
  System monitor firmware, operating system, Macro Assembler, CRT-oriented Text Editor, Diagnostics, Interactive Compiler.
- High-level language, BASIC-M — Easy to learn and ideal for program design because of its conversational nature, BASIC-M (compatible with standard BASIC) provides real-time condition and interrupt monitoring.
- The Pascal high-level language is optionally available to give the EXORset user the power and versatility of this block-structured language.
- Standard parallel printer interface.
- Fully compatible with EXORciser/EXORterm systems and Micromodules — Two Micromodule-compatible connectors are available for user applications.

MC6801 Evaluation Module — MEX6801EVM
MC68701 Programming Module — MEX6801EVM1

As configured, the MC68701 MCU may be evaluated in the single-chip mode by attaching an RS-232C compatible terminal to the serial port of the module. Thus, the minimum functioning system consists of only the MC6801 MCU and two level translators, MC1488 and MC1489.

In the expanded mode, the user may add an ACIA, PTM, 4K bytes of RAM or 2K EPROM and a programmable gate array for address configuration. For additional programming flexibility, the expanded mode allocates 8K bytes of off-board program space.

The Evaluation Module provides the user with the ability to evaluate the MC6801 microcomputer using the LILbug debug monitor via the serial I/O port and RS-232C interface.

The MC68701 Programming Module is populated with an MC68701 device and 2K bytes of RAM to provide programming capability for the MC68701 EPROM device. It may also be used to evaluate the MC6801.

MC68000 Design Module — MEX68KDM

The MC68000 Design Module provides the user with an easy means of designing with and evaluating the MC68000 microprocessor. This module provides a debug monitor (MACSbug), 32K bytes of RAM, two 16-bit parallel I/O ports, three 16-bit programmable timers, two ACIA serial RS-232C ports, and a wirewrap user's area.

The Module may be used in one of three configurations. First it may be used as a stand-alone, where the user provides his own power supply and RS-232C terminal. Secondly, it may be used in an existing EXORciser or EXORterm System in the non-expanded bus mode. Finally, it may be used in a card cage with other EXORbus memory or I/O boards in the expanded mode.

An EXORbus interface card is provided to allow the Design Module to read or write data to an external memory or I/O card in either the upper or lower byte positions.

Resident System Software

8-Bit Assemblers, Editors and Monitors

M6800 and M6809 Development System Software Package

Supplied with the Motorola floppy disk subsystem, EXORdisk, is a basic software development package consisting of the Motorola Disk Operating System (MDOS), CRT Editor, Macro Assembler and Linking Loader.

M6800/M6801 and M6809 Downline Loaders

The Download Utility permits loading programs that are developed on a host system into an EXORciser and Micromodule system. Key features include position independence, user specification of ACIA addresses and control codes, software selection of transmission codes, comprehensive error checking and reporting, and an optional entry point for user-developed Debug/Monitor programs.

M6809 Real-time Multitasking System

The M6809 Real-time Executive (RMS09) provides a multitask control capability for the M6809. The RMS09 is ROMable and may be used with Micromodule 19 or other similar hardware.

EXORset Development System Software Package

The following software package is delivered on mini-diskettes with EXORset:

- XDOS Operating System — Compatible with MDOS
- CRT-oriented Text Editor — Simplifies program entry and modification
- Macro Assemblers — Processes source program statements written in M6800, M6801, M6805, and M6809 assembly language.
- Diagnostics — Disk file of check-out routines
- BASIC-M Interactive Compiler — Universal programming language with bit manipulation and trace.
- Pascal Compiler (optional)

8-Bit High-Level Languages and Cross Assemblers

Resident MPL Compiler

A high-level, user-oriented system programming language for the MC6800 and MC6809 MPU's, MPL is a block-structured language with features chosen for applicability to the microprocessor environment. This compiler is designed to operate in an EXORterm or EXORciser floppy disk-based environment with MDOS.

M6800/M6809 FORTRAN

Resident FORTRAN is a high-level programming language widely used for scientific and engineering problem solving. This FORTRAN Compiler, which is a subset of the ANSI standard FORTRAN IV, translates the source program into a relocatable object module. The Linking Loader converts the relocatable object code into an executable object file.

M6800 Real-Time FORTRAN Compiler

This FORTRAN Compiler enables the user to write real-time software in a high-level language for use in M6800-based Micromodule systems. It also contains an execution-time operating system, allowing several queues of tasks to be performed, with an ability to respond to real-time interrupts and to generate delays.

M6800 Resident BASIC Interpreter

The Resident BASIC Interpreter provides another problem-solving tool to the M6800 microcomputer family of products. BASIC is high-level programming language widely-used for education, general-purpose, and certain business-related applications. Decimal arithmetic, string variables and arrays, string functions, and printer output are several of the features.

M6809 BASIC-M Interactive Compiler

The BASIC-M Interactive Compiler provides an extension over standard BASIC in two major directions. It improves considerably the capabilities of the BASIC programming language and generates executable codes that can be used independently of the compiler itself. The compiler is available for M6809-based EXORciser, EXORterm, and EXORset development systems.

M6809 Pascal

M6809 Pascal produces relocatable object modules that may be linked with other separately compiled Pascal modules and/or assembly language modules. The object code is position independent, re-entrant and ROMable. Both a Compiler which produces a relocatable object module, and an Interpreter version are available for M6809-based EXORciser systems. A Pascal compiler is optionally available for EXORset.

M68000 Pascal Compiler on M6809

The M68000 Cross Pascal Compiler further extends the powerful software development capabilities of the M6809-based EXORciser, by permitting the compilation of M68000 programs written in Pascal.

RESIDENT SYSTEM SOFTWARE (continued)

Cross Macro Assemblers

Cross Macro Assemblers are provided for the following MPU/MCU on the 6800/6809-based EXORciser and EXORterm.

M6800* (M6802, M6808)
M6801* (M68701, M6803)
M6805* (M146805)
M6809* (M6809E)
*Includes Linking Loader

Motorola also offers Cross Assemblers for the M141000/1200 Development Systems. These assemblers permit the user to develop his software on an M6800-based EXORciser.

Debug Aids

M6809 Symbolic Debugger

The M6809 Symbolic Debugger (SYMbug) permits software developers to debug programs at the source level, and relieves the user of the task of remembering a large number of details about his program. It allows the programmer to examine and modify program elements, to control execution, to trace program execution, and to create macro commands. SYMbug is available on M6809 based EXORciser or EXORterm development systems.

Non-Resident Software Options

Cross-computer software allows the use of a mainframe computer to develop programs for, and to simulate M6800, M6809 or M68000 hardware during the development of microcomputer systems. The following software routines simplify the use of such computers in program development.

- Cross Assembler — Translates assembly language mnemonics and directives into microprocessor machine language.
- Cross Simulator — Simulates the execution of machine language instructions for the microprocessor, and optionally provides a count of the elapsed cycles of simulation.
- MPL Cross Compiler — Translates the high-level user-oriented system language called MPL into microprocessor assembly language. MPL is a block-structured language especially suitable for implementing control type applications.
- Pascal Compiler — Pascal is a powerful general purpose block-structured language that meets a wide variety of programming needs. Motorola Pascal includes extensions that make it easier to use Pascal when implementing software for a microprocessor-oriented environment.

Cross Computer Software

For MC68000 . . .	Simulator — for IBM 370 Macro Assembler — for IBM 370, PDP 11 Pascal — for IBM 370
For MC6809 . . .	Macro Assembler — for IBM 370, PDP 11
For MC6800 . . .	Macro Assembler and Simulator for IBM 370 Sigma 9 Nova CDC6000 Honeywell 6000 PDP 11 MPL for IBM 370 Sigma 9 CDC6000 Honeywell 6000

Peripherals

Use of appropriate peripheral devices can generate savings by affording faster program development. Each Motorola peripheral is supplied with the necessary circuitry to perform the necessary development system interface function.

EXORterm 155

EXORterm 155 is a video terminal which facilitates the exchange of data between the user and the development system via a high quality video interface in combination with keyboard entry and a serial communications link using speeds up to 9600 baud.

EXORterm 155 uses LSI components of the M6800 family to provide control of the display attributes, communication facility, terminal switch/indicator control, and keyboard inputs. The keyboard provides cursor control keys and special keys to invoke functions unique to the EXORciser and EXORmacs Operating Systems. These keys can also be used by the designer for special routines. An additional Text Edit mode feature permits multiuser editing.

EXORterm 155 may be connected for either RS-232C or 20/60 mA current loop operation. Like the EXORterm Development System, this display console contains a high-quality CRT with a full 1920-character screen and 7 x 9 ASCII characters.

THE EXORdisk

The EXORdisk is a dual floppy disk storage system with its own package of development software. EXORdisk is designed to support either MDOS (the EXORciser Disk Operating System) or VERSAdos (the EXORmacs Disk Operating System). It facilitates high-speed data transfers through fast headsettling time and logical sector arrangement. An interface card connects this storage system to the EXORmacs, EXORciser or EXORterm Development Systems.

EXORdisk is available in various storage capacities. EXORdisk II offers 512K bytes of storage. It is a single-sided/single-density dual drive system with up to 256K bytes of memory per diskette. EXORdisk III is a double-sided/single-density dual drive system with total storage of 1 million bytes. An expansion unit is available for EXORdisk III which adds one additional disk drive and interconnecting cable to increase storage to 2 million bytes.

Hard Disk

The longer, more complex programs written for advanced 16-bit processors like the MC68000 make much higher data transfer speed and larger storage capacity a necessity. New Hard Disk systems offer the EXORmacs user a choice of high speed mass storage.

For multiuser operation in the EXORmacs system, Hard Disk is required to provide rapid storage and retrieval for a large number of files. Hard Disk storage greatly enhances and increases file access performance over a floppy disk-based system.

Dot-Matrix Printers

Motorola dot-matrix printers are equipped with an interface module and/or an interconnection cable assembly that specifically adapts them to the various Motorola microcomputer development systems, including the EXORmacs, EXORciser, EXORterm and EXORset. In addition these interface accessories permit the printers to be used with Motorola Micromodules to provide more complete availability of microcomputer system components. Printer specifications are as follows:

FUNCTION	PRT200	PRT100
Print Speed (cps)	180	80
Lines-per-Minute (80 characters)	90	28
Bidirectional Printing	Yes	No
Dot-Matrix	7 x 7	9 x 7
ASCII Character Set	96	96
Tractor Feed	Yes	Yes
Condensed Print (10-16.5 cpi)	—	Yes

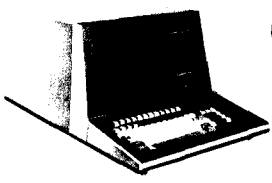

EXORterm

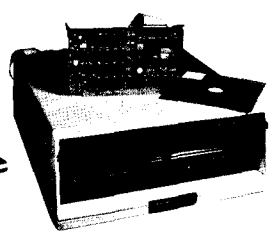

EXORdisk

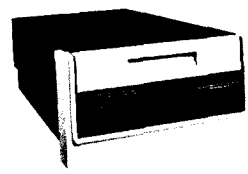

Hard Disk

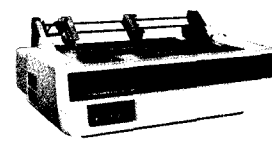

Dot-Matrix Printer

Board-Level Products

VERSAmodules

VERSAmodules represent a new class of modular subsystems with which to implement a complete high-performance microcomputer system. Based on the 16-bit MC68000 microprocessor, and VERSAbus, Motorola's new high-speed system-interconnect bus, VERSAmodule microcomputer systems rival the performance category of medium range minicomputers.

Micromodules

An extensive set of compatible board-level, 8-bit microcomputer subsystems with which to configure complete systems with widely varying capabilities — quickly, efficiently and cost-effectively.

Memory Systems

Our products include standard add-in memory boards for the most popular micro/minicomputers, add-on mass memory systems for mini/maxi computers, and custom, one-of-a-kind, designs to customer specifications. Our capabilities range from microprocessor-based systems and memory boards to multimegabyte mass memory systems.

Table of Contents

	Page
Monoboard Microcomputers	2-2
Basic Microprocessor Assemblies	2-3
Data Converters	2-4
Input/Output Modules	2-4
Memory Modules	2-4
Auxiliary Modules	2-7
Software/Firmware Support	2-8
Packaging Hardware	2-9
CRT Display Monitor	2-9
Monoboard Microcomputer	2-10
Packaging Accessories	2-12
Board Selector Guide	2-13

Micromodules

The Micromodule family consists of an extensive complement of board-type products that permit rapid implementation of 8-bit microcomputers. It is headed by a selection of differently configured, single-board microcomputers, requiring additionally only an appropriate power supply, enclosure (see page 61), and a user application program for implementation. These boards vary in capabilities and applications due to difference in the on-board microprocessor, as well as I/O and memory content. System capabilities may be further expanded through the addition of supplemental Micromodule memory boards.

Complementing these monoboard microcomputers is a line of support modules (page 56) that permit expansion of the basic microcomputer to systems offering broadly expanded capabilities.

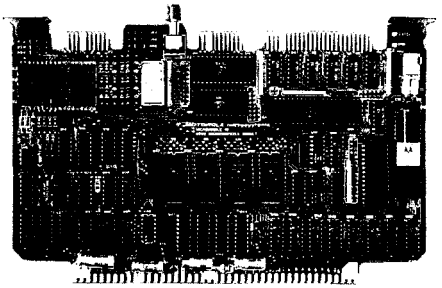

The photograph of Micromodule 19, utilizing the MC6809MPU, is representative of the composition of Motorola Monoboard Microcomputers. Variations consist primarily in I/O and on-board memory configuration.

Part No.	Parallel Input/Output	Serial I/O			Memory		MPU	Clock (MHz)	Options
		RS-232C	RS-422	20 mA	ROM	RAM			
M68MM01	3 PIAs/60 Lines				To 4K	1K	6800	1	
M68MM01A2	2 PIAs/40 Lines	1 ACIA		Use MM11*	To 8K	1K	6800	1	
M68MM01B	1 PIA/20 Lines 1 PTM				To 4K	128	6802	1	Not Expandable
M68MM01B1A	1 PIA/20 Lines 1 PTM	1 ACIA		Use MM11*	To 4K	384	6802	1	Cassette I/O
M68MM01D	Printer Port 1 PTM	1 ACIA	(OPT.) †	Use MM11*	To 10K		6800	1, 1.5	Use 2K RAMs in ROM Sockets
M68MM17	1 PIA/20 Lines 1 PTM	2 ACIA		Use MM11*	To 40K		6809	1	Use RAMs In ROM Sockets
M68MM19/19A	1 PIA/20 Lines 1 PTM	1 ACIA or SSDA	(OPT.) †	Use MM11*	To 16K	2K	6809	1(MM19) 2(MM19A)	Replace ACIA with SSDA †

PIA = 16 Programmable I/O Data Lines and 4 Control Lines
PTM = Three 16-bit Programmable Counter/Timers
ACIA = Asynchronous Communications
SSDA = Synchronous Communications

† = Option-requires slight board modification
* = Option-requires additional Micromodule (MM11) (RS-232C to 20 mA Current Loop Adapter)

Quick-Selection Guide — Memory Expansion Boards

Part Number/Name		EPROM/ROM	RAM		
			Static	Dynamic Refresh	Hidden Refresh
M68MM04	16K EPROM/ROM Module	1 to 16K			
M68MM04A	ROM/EPROM Module	1 to 64K	(2 to 32K)*		
M68MM06	2K Static RAM Module		2K		
M68MM09	4K Static CMOS RAM Module		4K**		
MEX6815-3	8K Dynamic RAM Module			8K	
MEX6816-1HR	16K Dynamic RAM Module w/Hidden Refresh				16K†
MEX68RR	EPROM/RAM Module	1 to 16K	512		

*Using Pin Compatible RAMs **With On-Board Battery Backup †32K, 48K and 64K versions available.

MC6809 — Based Monoboard Microcomputers

Parallel/Serial I/O with Timer **M68MM19,A**

Features advanced MC6809 8-bit microprocessor with high-level language capability and up to 2 MHz operation. 2K bytes of on-board static RAM is accessible from external DMA. Four sockets are wired to receive 2K or 4K EPROMs, ROMs or pin-compatible RAMs. Contains one MC6821 PIA (with strap-selectable I/O buffering), one MC6850 ACIA, replaceable with SSDA, optional RS-232C, RS-422, or RS-423 serial interface, and one MC6840 PTM with three 16-bit programmable timers. On-board dynamic memory refresh control logic and DMA control logic provides versatile memory interface.

Parallel/Serial I/O with Timer **M68MM17**

This module allows economical usage of MC6809 processing power in cost-sensitive applications. It features five 28-pin sockets for user-provided RAM/ROM/EPROM devices up to 8K bytes each. Serial I/O is available through two RS-232C standard ports. A buffered parallel I/O port (MC6821-based) is also provided. Timing and counting functions are accommodated with an MC6840 triple 16-bit programmable timer/counter. This module is configured for 1 MHz system operation.

MC6800/MC6802 — Based Microcomputers

Parallel I/O **M68MM01**

Microcomputer board designed primarily for parallel I/O applications. Timed by a 1 MHz crystal-controlled clock, the board contains 1K bytes of static RAM and has unpopulated sockets for four 1K EPROMs or ROMs. Dynamic refresh circuitry permits use of external add-on dynamic memory boards. The board mounts three Peripheral Interface Adapters (MC6821 PIAs) with 60 lines available for parallel I/O applications.

Parallel/Serial I/O **M68MM01A2**

Similar to above, but uses one MC6850A synchronous Communications Interface Adapter in place of one of the PIA circuits. This reduces parallel I/O to 40 lines, but adds RS-232C serial interface capability.

Parallel/Serial I/O with Timers **M68MM01B**
M68MM01B1A

Similar to 01A2 but sacrifices the second PIA (parallel I/O reduced to 20 lines) in favor of MC6840 PTM device with three 16-bit binary programmable timers. M68MM01B has no EXORbus interface and no additional on-board RAM, but 1B1A does have 256 bytes of additional RAM. Both have sockets for up to 4K of EPROM. Type 1B1A also features audio tape cassette interface circuitry.

Serial/Timer I/O with Printer **M68MM01D**

Similar to 1B1A, but converts the PIA circuit to a dedicated parallel printer interface. The on-board ACIA may be replaced with a Synchronous Serial Data Adapter (MC6852) device to provide a synchronous interface. Five sockets are available for 2K EPROMs, ROMs or pin-compatible RAMs.

Basic Microprocessor Assemblies

These subsystems provide the basic processing functions of a microcomputer. When combined with additional Micromodules, they offer a wide range of performance options.

Central Processing Unit **M68MM02**

Contains MPU and Timing/Control functions. This M6800-based microprocessor board has 1 MHz crystal-controlled clock. Includes timing and control for three-state and Halt operations and on-board dynamic memory refresh control logic.

Arithmetic Processing Unit **M68MM14, 14A**

Basic arithmetic processor features AM9511 APU capable of the four major arithmetic functions, plus square roots, logarithms and exponentiation, as well as fixed-point 16 and 32-bit operation, floating point 32-bit operation, and float-to-fixed and fixed-to-float conversions. Sample execution time for 32-bit floating point "multiply" is 49 μs (MM14A). 1 MHz and 2 MHz operation.

Microprocessor Support Modules

Quick-Selection Guide — Data Converters, Analog

Part Number/Name		A/D		D/A	
		High Level 12-Bit	Low Level 16-Bit	Voltage	Current
M68MM05A	High-Level, 12-Bit	8 Channel Differential			
M68MM05B	High-Level, 12-Bit	16 Channel Single Ended			
M68MM15A	High-Level, 12-Bit	8 Channel Differential 16 Channel Single Ended			
M68MM15A1	High-Level, 12-Bit	16 Channel Differential 32 Channel Single Ended			
M68MM15B	Low-Level, 16-Bit		1 Channel Isolated Expandable to 16 channels		
M68MM15BEX	Low-Level Expander		1-4 Channel Expander		
M68MM05C	Quad 12-Bit D/A			4 Channel	
M68MM15CV	Voltage D/A			1-4 Channel	
M68MM15CI	Current D/A				1-4 Channel

Quick Selection Guide — I/O Modules, Digital — Parallel

Part Number/Name		TTL Level		Relay Output	Opto Isolated	
		Input	Output		Input	Output
M68MM03	32/32 Input/Output	32	32			
MEX6820,6821-2	(2MHz) Input/Output	2 PIAs/40 I/O				
M68MM13A	Digital Output			16		
M68MM13B	Digital Output			32		
M68MM13C	Optically Isolated Digital Input				24 (voltage in)	
M68MM13D	Optically Isolated Digital Input				24 (switch closures)	
M68MM23	Optically Isolated Input/Output				1 to 16 AC or DC I/O	

Quick Selection Guide — I/O Modules, Digital — Serial

Part Number/Name		Interface				IEEE 488-1978 Bus
		RS-232C	RS-422	RS-423	20 mA	
M68MM07	Quad Communications	4*	4*	4*	4*	
MEX6850	ACIA	1			1	
MEX6850-2	2MHz ACIA/SSDA	**	**	**	**	
M68MM11	RS-232C to TTY Adapter	RS-232C to 20 mA Translator				
M68MM12/ 12-1***	GPIB Listener/Talker/ Controller					Listener/Talker Controller
M68MM12A/ 12A1***	GPIB Listener/Talker					Listener/Talker
M68DIM2A	Display Interface	Composite Video at 0.5V, 75 Ω (Compatible with M68MDM1 CRT)				

*ACIA or SSDA and Interface are User Options.
**SSDA and Interface must be installed by the user.
***M68MM12/12A for 6800-based systems
M68MM12-1/12A1 for 6809-based systems

Memory — I/O Modules, Digital Serial/Parallel

Part Number	Name
M68MM16/16A	Combo ROM/RAM — I/O Module 1 PIA, 1 PTM, 1 ACIA, 2K RAM, To 32K ROM/EPROM

Microprocessor Support Modules

Data Converters

Analog-to-Digital

Micromodules 15A/A1 accept analog input voltages ranging from 625 mV to 10 volts full scale, and convert them with nominal 12-bit resolution into a digital representation. Micromodule 15A provides 16 single-ended or 8 differential input channels while Micromodule 15A1 offers 32 single-ended or 16 differential input channels.

The module comprises analog input multiplexers; means (strappable option) for operating with single-ended, pseudo-differential or true-differential inputs; means (strappable option) for choosing unipolar 5 or 10 volt full scale or choosing bipolar ±5 or ±10 volt full scale input levels. A software programmable gain amplifier offering gain factors of X1, X2, X4, or X8, an A/D converter of nominal 12-bit resolution, a 5-volt to ±15-volt dc to dc converter, and TTL-compatible buffers for the system address, control, and data busses are also provided.

M68MM05A, B

Similar to above, but has only 8-channel differential (MM5A) or 16-channel single-ended (MM5B) analog inputs. Input range is (strappable) ±10 mV to ±10 V and gain range is resistor programmable from 1 to 1000 V/V. Unipolar full scale inputs of 0 to 5 V and 0 to 10 V, and bipolar inputs of ±2.5 V, ±5 V and ±10 V are jumper selectable.

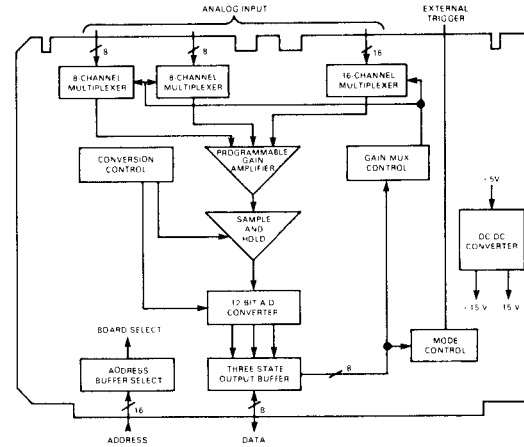

High-Level 12-Bit **M68MM15A, A1**

Low-Level, 16-Bit **M68MM15B**

Highly sensitive A/D converter with 15-bit (plus sign) resolution designed for inputs from thermocouples or strain gauges, using dual-slope integration with auto zero. Input channels expandable to a maximum of 16, with a conversion time of 133.33 ms (max). Features include isolated floating inputs with common-mode voltage of ±500 Vdc, switch selectable linearization, and on-board cold-junction compensation. A 4-channel expander is available as M68MM15BEX.

Digital-to-Analog

4-Channel, Voltage Output **M68MM05C**

Four independently selectable 12-bit input channels providing full-scale output voltages of 0–10 V, 0–5 V, ±2.5 V, ±5 V and ±10 V (jumper selectable). Operates on single 5 V supply due to on-board +15 V dc-to-dc converter.

4-Channel
Current/Voltage Output **M68MM15CV, CI**

Four 12-bit D/A channels with strap selectable full-scale outputs of 0-10 V, 0-5 V, ±10 V and ±5 V (each channel) for Module 15 CV, and 4 to 20 mAdc output for Module CI. Input may be in natural binary or in two's complement code.

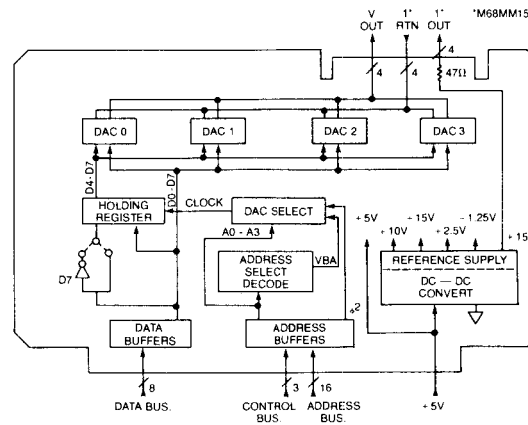

Input/Output Modules

Digital, Parallel

Universal PIA-Controlled I/O **MEX6820, 21-2**

Contains two versatile MC6821 PIAs with a total of four separate 8-bit I/O ports for peripheral interfacing. Each I/O port has four interrupt lines, two of which may be used as peripheral control lines. On-board circuitry allows switch selectable base-memory address locations for each PIA.

32-In/32-Out Expansion Module **M68MM03**

32 bits of parallel input + 32 bits of parallel output, in four contiguous 8-bit bytes.

This I/O expansion module can transfer 4 bytes of information between a microcomputer and an external system, thus speeding up the data transfer cycle. Using the MC6800 MPU index register or the MC6809 D register, all 32 input bits can be read and stored in 20 machine cycles, while only 18 machine cycles (16 for MC6809) are required to load and latch the 32 output bits. Inputs and outputs are TTL compatible.

16/32 Channel Relay Output **M68MM13A, B**

Micromodules 13A and 13B provide 16 or 32 digital relay terminated (on-board) output channels, respectively, used to isolate the microcomputer from the system being controlled. Each output (contact closure) is isolated from the microcomputer bus up to 600 Vdc and from channel-to-channel up to 300 Vdc. Varistors are used to protect each reed relay contact by suppressing high voltage transients such as those encountered in inductive circuits.

24-Channel Optically Isolated Digital Input Modules **M68MM13C, D**

These modules have 24 optically isolated byte-organized (groups of eight) input channels that provide a high degree of isolation between the microcomputer and the equipment being monitored. User-supplied channel input voltages of 17 volts or greater are read as a logical 1; voltages of 4 volts or less represent a logical 0. Micromodule 13D has an on-board power supply to provide a wetting current for applications where the input to a channel is a switch (or relay) closure rather than a voltage. On-board address selection permits each board to be placed anywhere in memory.

Digital, Serial

Quad Serial I/O **M68MM07**

This module mounts four MC6850 Asynchronous Communications Interface Adapters (ACIAs) or user-installed MC6852 Synchronous Serial Data Adapters (SSDAs) with a strap-option selected baud rate for each of the four ports. Strap option also selects RS-232C, RS-422, RS-423 or 20 mA interface for each port.

ACIA Modules **MEX6850, 50-2**

Mounts one MC6850 ACIA and offers both TTY and RS-232C data terminal interface with either 1 MHz (MEX6850) or 2 MHz (MEX6850-2) operation. Features eight switch-selectable baud rates between 110 and 9600 baud. MEX6850 has its RS-232C output configured as a modem; 6850-2 as a terminal.

Interface Bus (GPIB) Modules **M68MM12, -1/12A, A1**

. . . provide the hardware necessary for implementing an interface to the General Purpose Interface Bus (GPIB) — the IEEE STD 488-1978 — for use with Micromodule-based systems.

Micromodule 12A and 12A1 provide the Listener/Talker functions of the GPIB, allowing the user's system to send and receive data bytes, request service and respond to parallel and serial polls. To these functions, Micromodule 12 and 12-1 add the Controller function, permitting the user's system to send commands and conduct serial and parallel polls.

Optional M6800 and M6809 software routines for use with both modules are also available. With minor modifications, this software may be used in most cases to fulfill the application requirements.

Micromodules 12 and 12A are bus compatible and system compatible with MC6800 and MC6802-based monoboards, with other memory and I/O Micromodules, and all MC6800 Development Systems. Micromodules 12-1 and 12A1 are compatible with MC6809-based systems.

Memory Modules

Static RAMs

2K Static Array **M68MM06**

Consists of two 1K-byte NMOS memory packages, together with EXORbus buffers and facilities for on-board and off-board address select.

4K CMOS RAM with Battery Backup **M68MM09**

Low-power CMOS RAM with on-and-off-board address select. On-board battery with minimum 4-day retention capability.

Dynamic RAM

16K RAM with Parity **MEX6816-1HR**

16K bytes of dynamic NMOS memory with switch selectable base-memory address for the array. Memory refreshes without processor timing interruption.

Combination Memory/IO

Memory, I/O Expansion Module **M68MM16**

This memory and I/O Expansion Module allows economical addition of small increments of ROM, RAM, serial I/O and parallel I/O to systems configured with 6800- or 6809-based monoboard microcomputers. It provides four sockets for up to 32K bytes of ROM/EPROM, or pin-compatible RAM devices. 2K bytes of static RAM is also supplied. A full 20 lines of buffered parallel I/O is provided as a printer interface or for other parallel I/O requirements. A single serial port based on an ACIA is also provided with user selection of RS-232C, RS-422, or RS-423 interface. A triple 16-bit programmable timer/counter is also included. This module is useable in either 1 or 2 MHz systems.

Prewired Memory Boards

ROM/RAM Combination **MEX68RR**

Unpopulated board wired to accept up to 16K bytes of ROM/PROM in four 4K-byte arrays and up to 512 bytes of RAM in 128 byte increments.

ROM/EPROM Array **M68MM04A**

Sockets for up to sixteen 1K, 2K or 4K EPROMs or ROMs or pin-compatible RAMs.

Auxiliary Support Modules

Power-Fail Detect Module **M68MM10A, B**

Provides a power-fail detect sequence; $\overline{\text{NMI}}$, $\overline{\text{PWRFAIL}}$ and $\overline{\text{RESET}}$ whenever the line voltage drops cycles or goes below an adjustable level. These signals can be used in a system to protect critical data in battery backed up RAM (e.g., MM09 or MM19).

M68MM10B adds a CMOS Time-of-Day Clock, Calendar and RAM (50 bytes) function with on-board battery backup.

Time of Day Clock Module **M68MM10C**

Provides battery backed up Time-of-Day Clock, Calendar and RAM (50 bytes) functions.

Universal Support Module **MEX68USM**

Allows the user to design a unique module to implement the M6800 family of parts. The complete development system bus is available for the user to implement by header, platforms, wirewrap sockets, or switch selection. Three I/O edge connectors provide 120 lines accessible at plated-through holes.

Four hexadecimal address select switches allow the user to generate a fully decoded chip select; two header areas provide a "don't care" option on each address line.

Wirewrap Module **MEX68WW**

Permits the user to construct and incorporate his custom circuits into a Micromodule or EXORciser system. Incorporates power bus and the ground bus printed wiring runs. The module has standard pin spacing and provisions for 14, 16 and 24-pin wirewrap sockets and for two 50-pin wirewrap flatribbon cable connectors.

Extender Board **MEX68XT**

Allows the user to extend a micromodule board out of the chassis for troubleshooting and debugging.

Firmware/Software

Micromodule M68MM08A is a ROM containing the MICRObug monitor/debug functions, and is intended for use with Monoboard Microcomputer M68MM01A2, which contains its own serial communications port. Micromodule MM08A which includes an MEX6850 Asynchronous Communications Interface Adapter (ACIA) module can be used with Micromodules M68MM01 or M68MM02 (which do not themselves contain serial I/O).

User interactive program provides both hardware and software development and debugging.

Real-Time FORTRAN (6800)
M68RTFR02M — MDOS Diskette

Resident Real-Time FORTRAN is a high level programming language which provides the programmer with the capability of writing real-time software for the 6800 MPU. In addition to the scientific and engineering problem-solving features normally found in FORTRAN, Real-Time FORTRAN also contains an execution-time operating system. Driver routines are also included for the various digital and analog input-output Micromodules. The Real-Time FORTRAN Compiler translates the source program into a relocatable object module which the linking loader converts into an executable object unit. The Real-Time FORTRAN Compiler requires 48K bytes of memory for compilation in an EXORciser or EXORterm 220.

Real-Time Executive (6809)
M6809RMS09 — MDOS Diskette

The 6809 Real-Time Executive provides a multitask control capability for 6809-based systems. RMS09 is relocatable and ROMable and may be used with Micromodule 19 or other similar systems. Some features of RMS09 are:

- Interrupt handling
- Timer support
- Services up to 255 tasks with task scheduling based on priority levels
- Support for I/O control
- Provides for interactive system control task
- Task oriented debugger with trace capability available for optional inclusion
- Permits resource sharing

Resident ROM BASIC Interpreter for use with MICRObug
M68BASRC2 — seven programmed EPROMs
M68BASRM2 — The above EPROMs on EPROM Module

The MICRObug Resident BASIC Interpreter allows the user to take advantage of the high-level BASIC language in developing his Micromodule programs.

BASIC-M Compiler
M6809BASICM-MDOS Diskette

The M6809 BASIC-M Interactive Compiler is an easy-to-learn and easy-to-use high-level language which provides the power to solve a wide variety of problems with particular emphasis on real-time, process control and business-related applications. BASIC-M has a number of facilities commonly associated with other higher level languages, plus enhancements specifically oriented toward microprocessors. This BASIC-M package requires 48K bytes of RAM for compilation in EXORciser or EXORterm 220.

Software Module

MDOS Diskette (6800)	**M68MM12SWM/12ASWM**
MDOS Diskette (6809)	**M68MM12-1SWM/12A1SWM**

This source-code software provides the user with the source-code that can be used to implement the GPIB protocol. In addition, a how-to-use training program and demonstration program are also provided.

SUPERbug Firmware (M6809) **M68MM19SB**

SUPERbug is the combination of two separate Program Modules.

Module I — 4K program containing SUPERlink, SUPERio, and SUPERutil

- SUPERlink —
  A program linkage and RAM allocation manager which allows physically disassociated, position-independent Software/Firmware Micromodules to intercommunicate.
- SUPERio —
  An extensive, device-independent macro input/output support package.
- SUPERutil —
  contains the various routines utilized by SUPERmon which are fully available to the user.

Module II — a 2K relocatable monitor routine, contains SUPERmon.

- SUPERmon —
  A high performance system monitor and debugger in a separate 2K Program Module. This module is intended for use during the debug phase of development and may be removed from the final production configuration.

Packaging/Hardware

Chassis, Card Cages and Power Supplies

Bringing a modularized microcomputer system on line is simple with these accessories designed to match the Micromodule architecture and your end use. A variety of chassis with integral power supply, and card cages with separate power supply are available to tailor the system to your requirements . . .

5, 10, and 14 Slot Chassis M68MMLS, SC, FLC

Micromodule chassis with Power Supply for standard RETMA 19″ rack mounting. Available in two pre-wired ready-to-use top-load models: long 10-card chassis, (LC), and short 5-card model, (SC). A front-load, 14-slot chassis (FLC) is also available. All versions use 15 A (@ 5 V) triple dc output power supply with specifications of M68MMPS2-1, below.

5 and 10 Slot Card Cages M68MMCC10, 5

Two card cages, with 10-card (CC10) or 5-card (CC5) capacity. Cages may be mounted in five possible orientations and have accommodations for power connection.

Triple Power Supply M68MMPS2-1

Triple Output Power Supply designed to handle voltage and current requirements for up to 14 Micromodules. Offers 15 A output at 5 Volts for five-volt MPU system, plus separate +12 V and −12 V outputs (2.5 and 1.5 A, respectively) for associated memory systems and other accessories. Dimensioned for mounting on either side of card cages.

Mounting Hardware

Rack mount slide kits are available for all three chassis types:

M68MMLK — Used with the long chassis, M68MMLC
M68MMSK — Used with the short chassis, M68MMSC
M68MMFLK — Used with the front-load chassis, M68MMFLC

CRT Monitor

5″ Display Monitor M68M1000-155

Display Monitor offers sharp picture detail with 650 line horizontal resolution, small spot size. The compact chassis has circuitry on two removable boards. Components are all solid-state (except the picture tube), drawing less than one amp at 12 Vdc. The M68M1000-155 interfaces directly with M68DIM6 Display Interface Module.

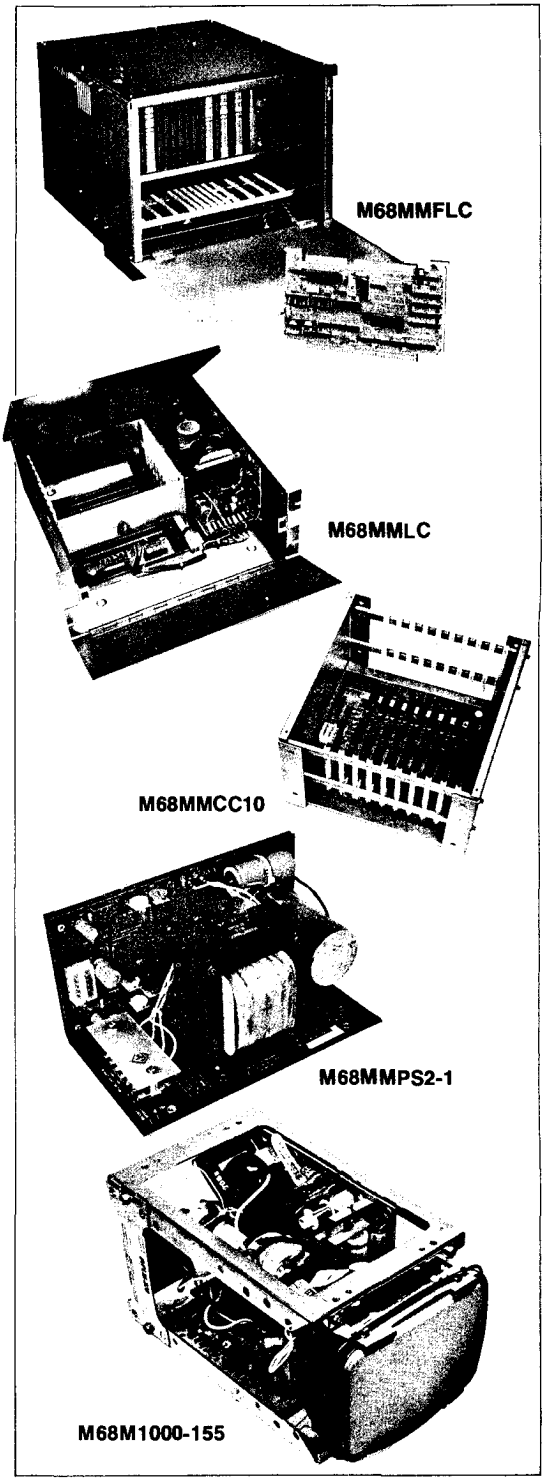

VERSAmodules
Monoboard Microcomputers

M68KVM01A1 (32K)
M68KVM01A2 (64K)

The VERSAmodule Monoboard Microcomputer is a complete 16-bit microcomputer system on a board. The heart of the system is the MC68000 Microprocessor Unit, which represents a significant advancement in 16-bit microcomputer system architecture. Its architectural features are optimized for the support of advanced high-level languages such as Pascal, with the result that program development is quicker and easier than heretofore possible.

The recommended development system for VERSAmodule Microcomputer system development is the EXORmacs (see page). EXORmacs is a multiuser development system, floppy disk or hard disk based, and is provided with advanced software development tools including a Macro Assembler, Pascal Compiler, CRT Editor, and Linkage Editor. Since EXORmacs also provides the VERSAbus interconnect structure and the VERSAdos operating systems, VERSAmodule applications can be easily developed and checked out in the EXORmacs chassis, and then moved to the target system for final debug.

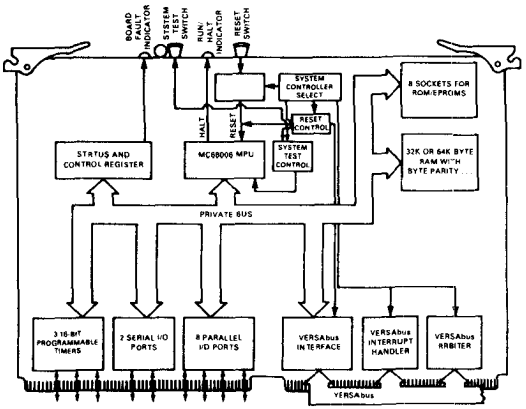

Features

1. MC68000 MPU with 8 MHz clock
2. VERSAbus interface
3. 2 serial I/O ports (RS-232C), one programmable synchronous/asynchronous and strappable for RS-422; second port async only; both terminal/modem selectable
4. 4 parallel I/O ports (each with 8 data and 2 handshake lines)
5. Triple 16-bit programmable timer
6. Backplane input/output connector
7. 8 sockets for up to 64K bytes of pin compatible 2-, 4-, or 8K-byte ROM or EPROM devices
8. 32K bytes (M68KVM01A1) or 64K bytes (M68KVM01A2) DRAM with byte parity
9. System test and reset switches, and board status indicators (LEDs)
10. VERSAbus interrupt handler
11. System controller functions:
    VERSAbus arbiter
    VERSAbus system clock, reset, etc.

System Configuration

The VERSAmodule product line offers a number of support accessories that permit immediate implementation of complete systems. The available support modules include Dynamic RAM modules with 32K, 64K, and 128K byte capacity, a Floppy Disk Controller module, a Multichannel Communications module, a Universal Intelligent Peripheral Controller module and a Universal Disk Controller System. Additional modules are planned.

All VERSAmodules are compatibly designed to operate with Motorola's versatile VERSAbus interconnect system which is designed for Multiprocessor operation, Direct Memory Access operations, Multi-Level Interrupt capability and Self-Test-control.

Together with packaging accessories including power supplies, card cages, and chassis, presently available VERSAmodules permit the configuration of microcomputers suitable for large-scale control, communications and general data processing applications.

Support Modules for System Implementation

Universal Disk Controller — UDC (two board set) M68KVM21

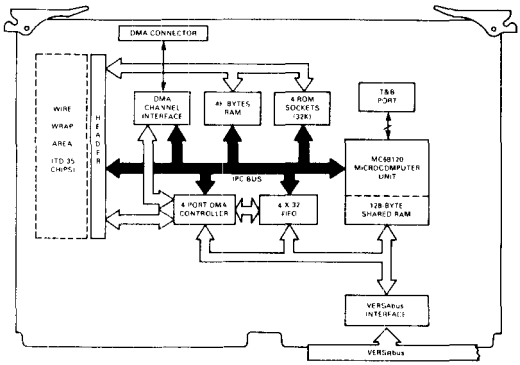

Universal Intelligent Peripheral Controller

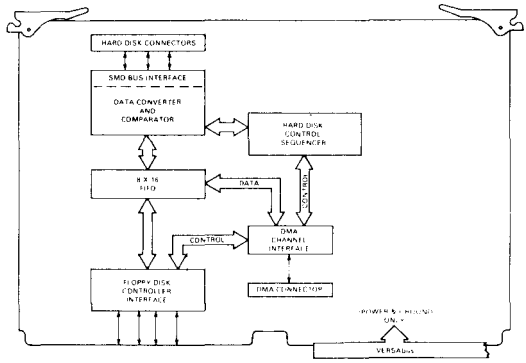

Disk Interface Module

Universal Disk Controller M68KVM21

The combination of the UIPC Module and the Disk Interface Module comprises a 2-board set known as the Universal Disk Controller (UDC). The UDC affords to VERSAmodule-based systems a compact, high-performance intelligent interface to both industry standard Hard Disk and Floppy Disk drives. The UDC has been qualified with hard disk drives of up to 300 megabyte capacity, and supports up to 4 floppy disk drives with a total of 2 megabyte storage.

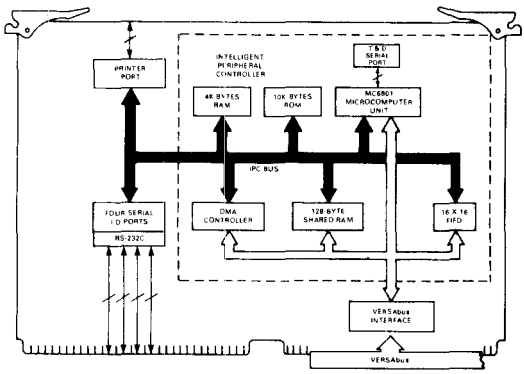

Multichannel Communications Module (MCCM) M68KVM30

- Four Asynchronous Serial I/O Ports
- RS-232C Serial Interface Standard, with programmable baud rates to 9.6K baud
- Industry standard parallel printer port
- VERSAbus Interface
- Intelligent Peripheral Controller (IPC) Architecture, including:
  8-bit Microcomputer Unit
  128 byte shared RAM for Command Packet Transfers
  High-speed FIFO buffer for data transfers
  DMA controller to Global RAM on VERSAbus
  Self-Test Firmware
  Test & Diagnostic Serial Port

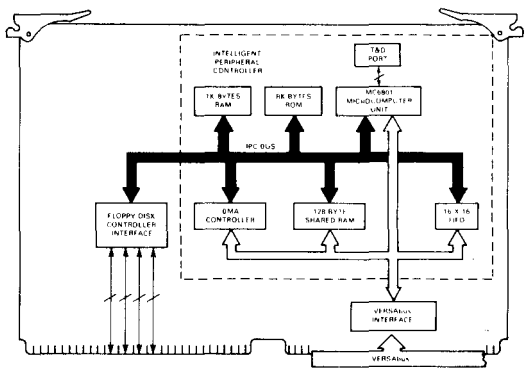

Floppy Disk Controller (FDC) Module M68KVM20

- Interface to two or four double-sided, single-density 8" Floppy Disk Drives
- VERSABus Interface
- Intelligent Peripheral Controller Architecture (See MCCM Features)

Dynamic RAM Module

M68KVM10-1 (32K)
M68KVM10-2 (64K)
M68KVM10-3 (128K)

VERSAbus-compatible dynamic memory module with 32K, 64K, and 128K-byte population options. May be used as ROM through strappable Write Disable function. A similar strap option enables or disables byte parity.

Packaging and Software

System Packaging Accessories

5¼″ Chassis with Power Supply
M68KVMCH1-1 (15A)
M68KVMCH1-2 (30A)

- 4-slot card cage, expandable to 12 slots in groups of 4
- Power supply (15 A or 30 A options)
- Forced air cooling
- 19″ rack mountable with slides provided
- 24″ depth

4-Slot Card Cage (stand-alone) **M68KVMCC1**

- Expandable to 12 slots in groups of 4

Power supplies **M68KVMPS1/M68MMPS1-1**

- Power fail detect feature
- Low power option (15 A @ 5 Vdc, ± 12 Vdc)
- High power option (30 A @ 5 Vdc, ± 12 Vdc, ± 15 Vdc)

VERSAbus Adapter Module

- Provides VERSAbus systems with the ability to utilize EXORbus family I/O modules including Micromodules

VERSAbus Extender Module

- Mechanical inserters and ejectors for module under test to extender module
- Full length card guides

VERSAbus Wirewrap Module

- Standard pin spacing for 14, 16, 18, 24, 40 and 64 pin wirewrap sockets

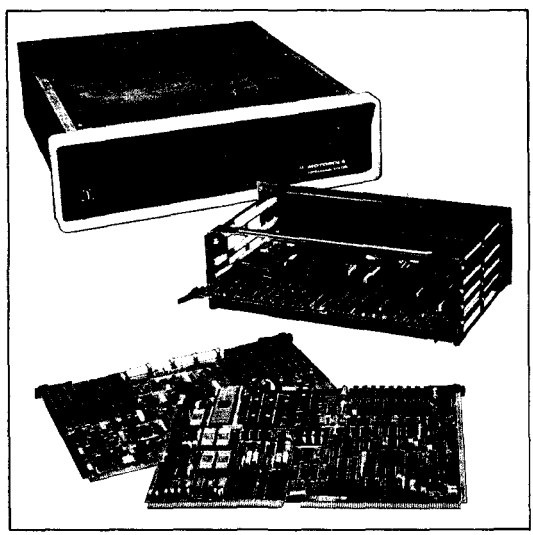

Software/Firmware Support

Motorola provides standard software and firmware packages to support the VERSAmodule Monoboard Microcomputer, within the categories of Real-Time Executives, Operating Systems, and Debuggers/Loaders. The principal features of these software products are as follows.

RMS68K — Real-Time Multitasking Executive Software

- Memory-Resident (ROMable)
- Physical (Channel) I/O
- Multitask Dynamic Scheduling
- Software and Hardware Interrupt Processing
- High-Speed Interrupt Response
- Intertask Communication and Task Synchronization
- Dynamic Allocation and Management of RAM
- User Trap Handling
- Exception Processing
- Time Delay, Periodic Task Activation, Time-Of-Day
- Easy Addition Of User-Written Device Drivers
- Upward Compatible To Real-Time Disk Operating System
- Compatible with EXORmacs System Software
- Customization via SYSGEN

VERSAdos — Real-Time Disk Operating System

- Provides All Real-Time Multitasking Software Features Of RMS68K, plus
- Device Independent I/O and Logical I/O
- Wait and Proceed Mode I/O
- Standard Device Drivers
- Multi-Level File Directories
- Shared File Access
- Dynamic or Contiguous File Space Allocation
- Random, Sequential, and Indexed Sequential File Access

VERSAbus — Debug/Monitor/Loader Firmware

- Initialization
- Display/Change Memory
- Display/Change Registers
- Set and Clear Breakpoints
- Block Initialize
- Block Move
- Search for a (Masked) Value
- TRACE with optional instruction count
- Downline Load

Memory Systems
Board Selector Guide

Host Computer	Motorola Device	Organization*	Access Time Typ (ns)	Parity
LSI-11,11/02,11/03 LSI-11/23, PDP-11/03	MMS1122N3032 MMS1132N3128 MMS1132P3128	32KX16 128KX16 128KX18	300 300 300	NO NO YES
PDP-11/04 through PDP-11/60. (Uses HEX SPC Slot.)	MMS1117-38PC MMS1117-48PC	64KX18 64KX18	300 350	YES YES
PDP-11/04, PDP-11/34 (Modified UNIBUS Compatible)	MMS1128P3064 MMS1128P3096	64KX18 96KX18	300 300	YES YES
PDP-11/04, PDP-11/24 PDP-11/34 (Modified & Extended UNIBUS Compatible)	MMS1119P3128 MMS1119P4128	128KX18 128KX18	300 350	YES YES
PDP-11/44	MMS1129E4512	1 Mbyte with EDAC (Error Detection and Correction)	350	NO
PDP-11/70	MMS1170E1064	256 Kbyte***	**	NO
VAX-11/750	MMS750AE1064 MMS750BE1256	256 Kbyte*** 1 Mbyte***	** **	NO NO
VAX-11/780	MMS780AE1032	256 Kbyte***	**	NO
SBC 80/—, SBC 86/— (MULTIBUS Compatible)	MMS8512E MMS8256E	512 Kbyte (with EDAC) 256 Kbyte (with EDAC)	350 350	NO NO
EXORmacs, VERSAmodule	MMS68KE4512	512 Kbyte (with EDAC)	350	NO

LSI, PDP, VAX, & UNIBUS are trademarks of Digital Equipment Corp.
MULTIBUS is a trademark of Intel.
* Only the most popular versions are listed. Depopulated models are also available in most series.
** Access Time is a function of DEC controller as well as listed array card.
*** These cards support EDAC. Actual circuitry is on DEC controller board.

Chapter 3

Microcomputer Components

Over 50 years of experience and innovation in electronics led to the development of Motorola's wide-ranging lines of NMOS, HMOS, and CMOS, microprocessors, and microcomponents. Motorola's microprocessor and microcomponents range from those that will replace several packs of logic to those that can replace many computers in computing power. Computing power is very important, but it is not the only consideration. At Motorola, quality and reliability are the other two considerations that go into every peripheral that we make. When a Motorola NMOS, HMOS, or CMOS component is designed into an application, it is the result of over 50 years of electronic know-how, innovation, and quality.

Table of Contents

	Page
Microcomputer Components	3-2
Supplementary Circuits for Microcomputer System Expansion	3-3
NMOS & HMOS Components	3-4
The 1st Generation: MC6800, MC6802, MC6808	3-4
The 2nd Generation: MC6801, MC6803, M6805 Family	3-5
The 3rd Generation: MC6809, MC68000	3-7
CMOS Processors	3-8
8-Bit Microprocessor and Single-Chip Microcomputers	3-8
4-Bit Single-Chip Microcomputers	3-9
1-Bit Microprocessor	3-9

Microcomputer Components

MPU/MCU Options for System Designs

Choice of Technology:

HMOS NMOS	CMOS (Very Low Power)	ECL (Very High Speed)
MC6800	MC14500B	MC10800
MC6801	MC141000	
MC68701	MC141200	
MC6802	MC146805E2	
MC6802NS	MC146805G2	
MC6803	MC146805F2	
MC6805P2		
MC6805P4		
MC6805R2		
MC6805U2		
MC68705P3		
MC68705R3		
MC68705U3		
MC6808		
MC6809		
MC6809E		
MC68000		
MC3870		

Choice of Processing Power:

1-Bit	4-Bit	8-Bit	16-Bit
MC14500B	MC141000	MC6800	MC68000
	MC141200	MC6801	(32-bit internal)
	MC10800	MC68701	
		MC6801U4	
		MC6802	
		MC6802NS	
		MC6803	
		MC6805P2	
		MC6805P4	
		MC6805R2	
		MC6805U2	
		MC68705P3	
		MC68705R3	
		MC68705U3	
		MC6808	
		MC3870	
		MC146805E2	
		MC146805G2	
		MC146805F2	
		MC6809 (16-bit internal)	
		MC6809E (16-bit internal)	

Choice of Functional Completeness:

MPU/CPU/ALU	MPU with On-Chip RAM	MCU MPU with On-Chip RAM, ROM & I/O
MC6800	MC6802	MC6801
MC6808	MC6802NS	MC68701
MC6809	MC6803	MC6801U4
MC6809E	MC146805E2	MC6805P2
MC68000		MC6805P4
MC14500B		MC6805R2
MC10800		MC6805U2
		MC68705P3
		MC68705R3
		MC68705U3
		MC3870
		MC141000
		MC141200
		MC146805G2
		MC146805F2

Choice of Language Orientation:

Low-Level Language	High-Level Language	Designer's Choice
MC6800	MC6809	MC14500B
MC6801	MC6809E	MC10800
MC68701	MC68000	
MC6802		
MC6802NS		
MC6803		
MC6805P2		
MC6805P4		
MC6805R2		
MC6805U2		
MC68705P3		
MC68705R3		
MC68705U3		
MC6808		
MC3870		
MC141000		
MC141200		
MC146805E2		
MC146805G2		
MC146805F2		

Supplementary Circuits for Microcomputer System Expansion

. . . for NMOS Systems

INTERFACE CIRCUITS

FOR 8-BIT SYSTEMS

For MC6800 Two-Phase Clock Generation — MC6875

For Parallel-Oriented Applications
- I/O-Timer-ROM — MC6846
- Peripheral Interface Adapter — MC6821
- Industrial Interface Adapter — MC6822
- Priority Interrupt Controller — MC6828
- Programmable Timer — MC6840
- General Purpose Interface Adapter — MC68488

For Serial Applications
- Enhanced Programmable Communication Interface – MC68661
- Multi Protocol Communication Controller – MC68652
- Polynominal Generator Checker – MC68653
- Asynchronous Communications Interface Adapter — MC6850
- Advanced Data Link Controller — MC6854
- Synchronous Serial Data Adapter — MC6852
- Digital Modem — MC6860
- Digital Modulator — MC6862

For Complex Peripheral Control
- Direct Memory Access Controller — MC6844
- Floppy Disk Controller — MC6843
- CRT Controller — MC6845
- Video Display Generator — MC6847
- Floating Point ROM — MC6839
- Memory Management Unit — MC6829
- Data Security Device — MC6859
- Real-Time Clock plus RAM — MC146818

For Dynamic Memory Control
- Dynamic Memory Controller — MC3480
- Address Multiplexer and Refresh Address Counters — MC3232A,MC3242A

For System Expansion
- Octal Buffer/Latch — MC6882A,B/MC3482A,B
- Hex Buffer Inverters — MC6885/MC8T95 through MC6888/MC8T98
- Quad Bus Transceivers — MC6880A/MC8T26A and MC6889/MC8T28
- Three-Channel Bidirectional Bus Switch — MC6881/MC3449

FOR 16-BIT SYSTEMS
- Intelligent Peripheral Controller — MC68120, MC68121
- Cluster Terminal Controller — MC68122
- Memory Management Unit — MC68451
- DMA Controller — MC68450
- Parallel Interface/Timer — MC68230

MEMORIES

RAMs — Static

128 x 8 Bit —	MCM6810/68A10/68B10
1024 x 4 Bit —	MCM2114/21L14

RAMs — Dynamic

4096 x 1 Bit —	MCM4027A
16384 x 1 Bit —	MCM4116B MCM4517
65536 x 1 Bit —	MCM6664 MCM6665

ROMs (Mask Programmable)

128 x (7 x 5) —	MCM6670
128 x (9 x 7) —	MCM66700
2048 x 8 Bit —	MCM68A316E MCM68A316A MCM65516
4096 x 8 Bit —	MCM68A332
8192 x 8 Bit —	MCM68A364/68B364 MCM68365 MCM68366

EPROMs

4096 x 8 Bit —	MCM2532
8192 x 8 Bit —	MCM68764 MCM68766

. . . for CMOS System

INTERFACE CIRCUITS

(In addition to the 8-bit circuits listed above)
- Real-Time Clock plus RAM — MC146818
- Parallel Interface — MC146823

MEMORIES

RAMs — Static

1024 x 1 Bit —	MCM6508 MCM6518

EEPROM

2048 x 8 Bit —	MCM65516

. . . for ECL Bit-Slice Systems

INTERFACE CIRCUITS
- Microprogrammer Controller — MC10801
- Timing Function — MC10802
- Memory Interface Function — MC10803
- Bidirectional Translators (ECL/TTL) — MC10804/5
- Dual Access Stack — MC10806
- 5-Bit Transceiver — MC10807
- Programmable Multibit Shifter — MC10808

MEMORIES

RAMs
- 8 x 2 Bits — MCM10143
- 16 x 4 Bits — MCM10145
- 128 x 1 Bit — MCM10147
- 256 x 1 Bit — MCM10144, MCM10152
- 1-24 x 1 Bit — MCM10146

PROMs
- 32 x 8 Bit — MCM10139
- 256 x 4 Bit — MCM10149

NMOS & HMOS Components

Motorola manufactures a line of NMOS HMOS MPU MCU components suitable for virtually any desired application. The first-generation devices (shown below) are basic 8-bit microprocessors for general purpose applications. Used with an assortment of peripherals from the facing page, these units allow the configuration of systems designed to provide custom performance at a cost-effective price.

The 2nd generation of components is based on the MC6800 MPU (except MC3870) and uses the same bus system and instruction set. However, they have on-chip RAM, ROM, I/O, etc. which makes them functional microcomputer units. The MC3870 is a simple dedicated MCU that uses the instruction set of the popular F8 microcomputer, not compatible with the M6800 family instructions or peripheral components.

The third generation includes an 8-bit and 16-bit processor offering the most powerful operations in their respective chip classifications. Designed for efficient handling of high-level languages they feature position-independent coding and re-entrant programming that makes them competitive in performance with low- and medium-end minicomputers. Thus, they mark the start of a new era of microprocessing.

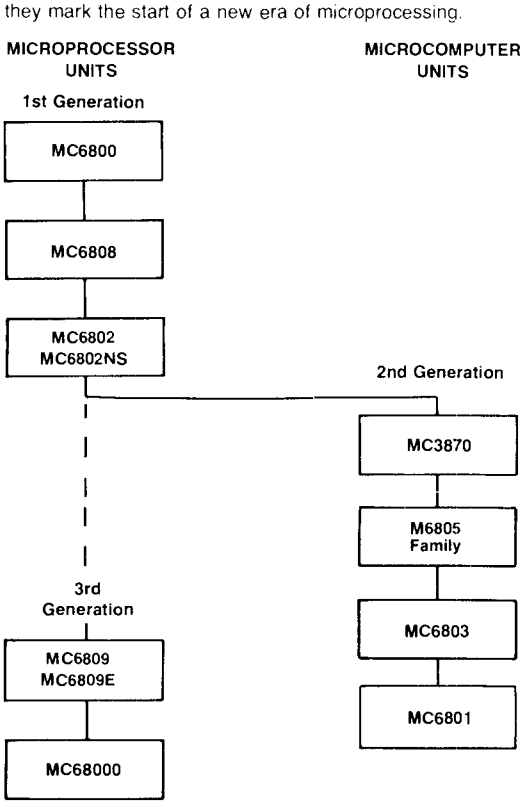

The 1st Generation 8-Bit MPUs MC6800 • MC6802 • MC6808

The MC6800 MPU

This microprocessor was the first of the M6800 MPU Family and still remains a highly cost-effective processor for a great many process-control and data-communications applications. Seventy-two powerful instructions and six different addressing modes give it unexcelled capability, and a full range of compatible peripheral chips offer the widest possible latitude in system implementation. After years of field experience, the MC6800 has earned an enviable reputation as one of the easiest-to-use processors available.

Moreover, to tailor the system to your specific needs at the lowest cost, the MC6800 (and its peripherals) is available in two different packages, three different temperature ranges and three speed ranges, as follows:

Temperature Range	Frequency Limit		
	1 MHz	1.5 MHz	2 MHz
0 to 70°C – 40 to 85°C – 55 to 125°C	MC6800P L MC6800CP CL MC6800BQCS CQCS	MC68A00P L MC68A00CP CL	MC68B00P _

P suffix = Plastic Package L suffix = Ceramic Package S suffix = Cerdip Package

The MC6802 MPU

This versatile processor has all the attributes of the basic MC6800, but it reduces the component count of a minimum microcomputer system to only two, compared with a minimum of four with the MC6800.

The built-in clock operates at a maximum frequency of 1 MHz but, thoughtfully, the chip designers have added an on-chip divide-by-four circuit to permit the use of an external 4-MHz crystal in lieu of a far more expensive 1-MHz crystal. In addition, the first 32 bytes of the built-in RAM may be operated in a low-power mode, from an external power source, to prevent the loss of information during a power-down situation.

Utilizing this MPU, a minimum microcomputer system consists of:

1 MC6802 MPU
1 MC6846 ROM-I/O-Timer Unit

Of course, the system is expandable to any requirement with the adapters, expanders, and other peripheral chips that are a part of the M6800 Family.

The MC6802 is available in both ceramic (suffix L) and plastic (suffix P) package.

The MC6808 MPU

This low-cost version of the MC6802 has an on-chip clock oscillator and driver, but no on-chip memory. It can utilize up to 64K of external RAM, ROM, or peripherals.

The 2nd Generation 8-Bit Single-Chip Microcomputers

MC6801 • MC6803 • M6805 Family

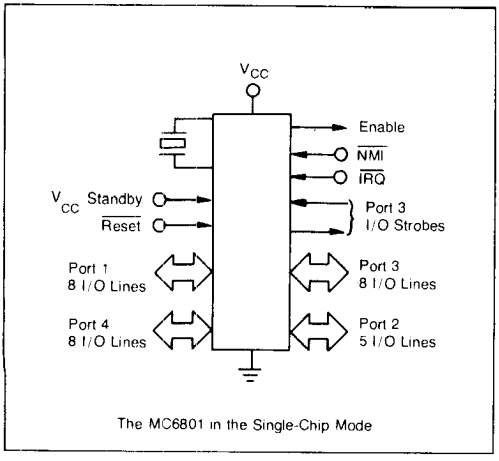

The MC6801 in the Single-Chip Mode

Take a basic MPU; add an on-chip clock and timer; put in enough Read-Only Memory to handle the program routines for a dedicated application, and enough Read/Write (RAM) Memory capacity to handle the associated manipulations; cap it off with sufficient Input/Output capability to interface with a number of parallel and serially oriented peripherals **— and you have a single-chip microcomputer.**

The single-chip system doesn't necessarily have all the flexibility of a multichip system, but with adequate capacity to handle a specific requirement, it can usually save both component cost and equipment manufacturing cost.

Motorola's line of MCUs has multiple user advantages:

1. A variety of MCU architectures to fit a user's dedicated application.
2. Compatibility with all M6800 support chips, for ease of system expansion.
3. Compatibility with M6800 software for upgraded system designs without designer reorientation or obsolescence of existing software libraries.

The MC6801

. . . the most advanced M6800-based microcomputer to date. Useful in a wide variety of applications requiring both parallel and serial I/O capability, yet suitable for system expansion with external M6800 peripheral components. A full expansion bus permits up to 64K memory bytes. An expanded MC6800 instruction set offers 16-bit operations as well as an 8 x 8 multiplication producing a 16-bit result. The MC6801 retains full object code compatibility with the standard M6800 instructions.

- On-Chip Clock with Divide-by-Four Circuit
- 16-Bit On-Chip Timer
- 2K Bytes of ROM
- 128 Bytes of RAM (Retainable with Vcc Standby)
- 31 Parallel I/O Lines

The versatile MC6801 MCU may be used in three basic operating modes:

1. The **Single Chip Mode** (see diagram at left) uses the MC6801 as a self-sufficient microcomputer with 24 parallel I/O lines, two handshake lines, plus an additional five lines (Port 2) that may be used as parallel I/O, serial I/O, or timer.
2. The **Expanded Non-Multiplexed Mode** uses the MC6801 in conjunction with M6800 peripheral circuits to expand its capacity. In such applications, the eight Port-3 lines are used as data lines for the peripherals and the Port-4 lines represent the peripheral Address lines. Thus the system is expandable to a maximum of 256 external address locations.
3. The **Expanded Multiplexed Mode** permits a vast expansion of system capabilities; the eight Port-4 lines become the high-order Address lines and the Port-3 lines are multiplexed to serve as Data lines and, alternatively, as the low-order Address lines. In this configuration, up to 64K external addresses are available.
4. **MC6801U4:** A development of the MC6801 with additional ROM (4K-bytes total), RAM (192 bytes total) and extra timer features.

The MC68701

The MC68701 is an EPROM version of the MC6801 in which the ROM is replaced by 2K of UV-erasable PROM. The EPROM is programmed by the CPU of the MC68701.

The MC6803

Limited version of MC6801, above. Has all the major attributes of the 6801, but requires external ROM and has a maximum of 13 parallel I/O lines.

The M6805 Family

. . . a new family of single-chip microcomputers designed from the ground up to be cost-effective and control-system oriented. The M6805 Family is a crossbreed of the positive traits of its M6800 heritage and the very low cost of earlier micro controllers. The M6805 Family MCUs retain all of the key M6800 features.

- Powerful 8-bit architecture
- Easy to program
- Complete general-purpose instruction set
- Efficient memory addressing
- Flexible, bidirectional I/O
- Look-up tables in ROM
- Common addressing of RAM, ROM, and I/O
- Full-vectored interrupts
- Single instruction Memory Examine/Change
- Sound development tools
- Multiple program registers
- Multilevel subroutines
- 5-volt power

To all of these strong characteristics, the M6805 Family has added an array of new traits:

- Both HMOS and CMOS technologies (See information on CMOS processors.)
- True single-instruction bit manipulation
- More addressing modes
- More efficient ROM usage
- Flexible memory and I/O mixes
  - Different ROM sizes
  - Different RAM sizes
  - Different package sizes
- Timer/Counter with Interrupt
- Lower testing costs
- Low-voltage Inhibit
- LED drive
- Zero crossing detection
- Low-power modes
- Self-check mode
- Microcomputer and microprocessor versions

For Dedicated Applications . . .
A non-6800 Single-Chip Microcomputer

The MC3870

The Motorola MC3870 is a complete 8-bit MOS microcomputer offering maximum cost-effectiveness for a wide range of control and logic-replacement applications. It is simple to implement (requiring only a single +5-volt ±10% power supply) and power saving in operation (requires only 275 mW, typical). Seventy-six instructions, the entire instruction set of the F8 multi-chip family, impart to the MC3870 a high degree of functional versatility.

The MC3870 is intended as a self-contained unit, preprogrammed to a customer's proprietary requirements.

The MC6805P2

. . . the first M6805 Family member in HMOS. Included on one chip are:

- Powerful 8-bit microprocessor
- 1100 bytes of mask-programmable user ROM
- 64 bytes of RAM
- 20 I/O lines
  - 8 drive LEDs or Darlingtons
  - All drive TTL
  - 8 drive CMOS
  - All are bidirectional
- Timer/Counter
  - 8-bit programmable counter
  - 7-bit tapped prescaler
  - External timer input
  - Maskable timer interrupt
- External interrupt
  - Zero crossing detection for ac
  - Maskable
- 28-pin package

The MC6805U2

. . . for increased memory and I/O capability with the same I/O, timer and interrupt traits as the MC6805P2.

- 2K bytes of mask-programmable user ROM
- 64 bytes of RAM
- 32 I/O lines
  - 24 are bidirectional
  - 8 drive LEDs or Darlingtons
  - All are TTL/CMOS compatible
- 40-pin package

The MC6805R2

. . . with the memory and I/O capability of the MC6805U2, *plus:*

- 4-channel A/D converter
  - 8-bit conversion
  - 4 multiplexed analog inputs
  - ± ½ LSB quantizing error
  - ± ½ LSB all other errors
  - ± 1 LSB total error (max)
- 40-pin package

The MC68705P3

. . . the first EPROM version of the M6805 Family

- 1804 bytes of user EPROM
- 112 bytes of RAM
- 20 TTL/CMOS-compatible I/O lines
- 8 lines are LED compatible
- 28-pin package

The MC68705R3

. . . similar to the MC6805R2 with 3776 bytes of EPROM and 112 bytes of RAM.

The MC68705U3

. . . similar to the MC6805U2 with 3776 bytes of EPROM and 112 bytes of RAM.

The 3rd Generation Higher Power High-Level-Language MPUs MC6809 • MC68000

With the 8-bit microcomputer scarcely digested by the system designers, new and far more powerful microprocessors are already in production. These new processors feature 16- and 32-bit internal architecture and are structured to work easily with high-level languages. The result — vastly reduced program development time. And, equally important, inherent features such as position independence code and reentrance can lead to "canned" firmware which, eventually, will significantly reduce software development cost.

The MC6809 • An 8-Bit Processor with 16-Bit Internal Capacity

With five internal 16-bit registers, this processor offers up to 5 times higher performance than the MC6800, yet, due to 8-bit output, it is fully compatible with all M6800 bus-oriented supplementary circuits and peripherals. Here's how it stacks up:

Architectural Improvements:

- Additional 16-bit index and stack registers
- Increased addressing modes
- 16-bit operations and 16-bit accumulator
- 8 x 8 multiplier
- Fast interrupt

Software Improvements:

- Designed for efficient handling of high-level language, including PASCAL, BASIC, MPL, COBOL and FORTRAN
- Position-independent coding and reentrant-programming capability encourage development of "canned software," with modular program interchangeability.
- Structural, highly subroutined code enhanced by two 16-bit index registers and program counter usable for indexing also
- Multitask and multiprocessor organization
- Stack-oriented compiler instructions with both user and hardware stack registers available.

The MC6809 is a logical step for applications that crowd the capacity limits of today's conventional 8-bit processors — yet, hardware and software (upward) compatibility with existing M6800 processors protects previous software investment.

The MC6809E

. . . all the features of the MC6809 plus external clocking to provide the flexibility required in a multiprocessor system.

The MC68000 • It's a Whole New Ball Game

The MC68000 microprocessor opens up the "world of 16 bits" to manufacturers of computer-run equipment, and elevates microcomputer capability into the realm of today's minicomputers. It departs from the conventional M6800 instruction set with 61 new instructions distinctly designed to support structured, high-level languages. Most instructions operate on bytes, words, and long words, and can use any of 14 available addressing modes. Combining the instructions with the various addressing modes, and six data types, makes available more than 1000 useful instructions.

Features:

- Advanced HMOS VLSI processing results in 68000 transistors per chip, with a factor-of-four improvement in speed-power product over standard NMOS.
- 16-bit output with 32-bit internal processing permits execution of up to 2-million instructions per second and paves the way for future expansion.
- Designed for efficient handling of high-level language, including PASCAL, BASIC, MPL, COBOL and FORTRAN.
- 24-bit address bus permits addressing of up to 16 megabytes of external memory.
- Position-independent coding and reentrant-programming capability encourage development of "canned software," with modular program interchangeability.
- 32-bit internal architecture minimizes instruction execution time, and provides a springboard for even more advanced 68000-based designs in the future.

The following table compares the anticipated execution of a test program on various M68 . . . type processors and offers a good perspective of the relative performance capabilities.

Processor	Number of Instructions Needed	ROM Bytes	Execution Time	Relative Execution Time For Large Array
MC6800	45	63	107 + N	1.0
MC6801	26	34	65 + 33N	1:2
MC6809	13	24	28.5 + 11.5N	1:5
MC68000	10	28	18.5 + 2:25N	1:25

The Motorola M6800 program encompasses complete hardware and software support for the MC68000 processor including peripheral chips, development systems, subsystem boards, software, documentation and training. Thus, the MC68000 marks the start of a new generation of microprocessors.

CMOS Processors

CMOS has one overriding advantage that makes it virtually indispensable for a large number of microcomputer uses — *low power consumption.* With CMOS circuitry, even the more sophisticated equipment may be designed for battery-powered operation, making it a must for portable applications.

Motorola offers CMOS MPU/MCUs in three different configurations — 8-Bit, 4-Bit, and 1-Bit. Moreover, system implementation is enhanced by one of the industry's most pervasive lines of SSI/MSI/LSI CMOS circuits, from gates to memories, and everything in between. And, like their NMOS counterparts, the CMOS components are supported by a full complement of hardware and software development tools.

MC146805E2	8-Bit Microprocessor
MC146805G2 MC146805F2	8-Bit Microcomputer
MC141000 MC141200 MC141099	4-Bit Microcomputer
MC14500B	1-Bit Microprocessor

8-Bit Microprocessor and Single-Chip Microcomputers MC146805_ _

The CMOS portion of the M6805 Family of microcomputers, microprocessors, and peripherals combines the low power characteristics of CMOS with the applications flexibility of the M6800 Family.

The MC146805E2

. . . initiates the CMOS side of the M6805 Family. It serves as an MC6800-class microprocessor with the low-power benefits of CMOS. Since no ROM is included, the MC146805E2 also serves as a real-time prototyping vehicle for CMOS *and* HMOS ROM-based M6805 Family MCUs.

The processor has sixty-one basic instructions that are similar to those of the popular MC6800 microprocessor, plus a complete set of bit-manipulation instructions to allow any bit in RAM or any I/O pin to be individually set, cleared or tested with a single instruction.

The low power requirement, twenty milliwatts at one megahertz and less than one milliwatt in standby, makes the part extremely attractive for those applications where power is a major consideration (portable instruments, telecommunications, point-of-sale terminals, remote instrumentation, appliance controllers, etc.). The voltage range is three to six volts.

Other features include:

- Expansion bus addressing 8K bytes of memory
- 112 bytes of on-chip RAM
- 16 bidirectional I/O lines in addition to the bus
- Timer/Counter
  - 8-bit programmable counter
  - 7-bit software-selectable prescaler
  - External timer input
  - Maskable timer interrupt
- Maskable external interrupt
- Low-power standby modes, software initiated
- 40-pin package
- Fully static
  - For lower power consumption
  - No minimum operating frequency
- Oscillator frequency to 5 MHz at 5 V
- Compatible ROM available — MCM65516 (2K × 8)

The MC146805G2

. . . the first CMOS MCU in the Family.

- 2K bytes of user ROM
- 32 bidirectional I/O lines
- 112 bytes of RAM
- 40 pins

The MC146805F2

. . . a system subset of the MC146805F2

- 1K bytes of user ROM
- 20 bidirectional I/O lines
- 64 bytes of RAM
- 28 pins

4-Bit Single-Chip Microcomputers MC141000 • MC141200 MC141099

The MC141000/1200 Family is source-program compatible, pin-out compatible, and architecturally similar to the well-known PMOS TMS1000 Family, but with the following additional features:

- Low power consumption —
  only 2.8 mW at 5 V, 100 kHz
  11.5 mW at 5 V, 600 kHz
  1.5 mW at 3 V, 200 kHz
  0.36 mW at 3 V, 30 kHz
- Fully static operation
- TTL-compatible — drives one TTL load or four LS-TTL loads
- Clock frequency to 600 kHz at 5 V

This family is useful in a wide variety of control applications.

The MC141000

This microcomputer includes a 1024 x 8-bit ROM and a 64 x 4-bit RAM. Eleven individually addressed R outputs are available. The MC141000 is in a 28-pin package.

Forty-three basic instructions handle I/O, constant data from the ROM, bit control, internal data transfer, arithmetic processing, logic comparison, conditional and nonconditional branching, and subroutines.

The MC141200

Similar to the MC141000, but with 16 R outputs and a 40-pin package.

The MC141099

This 48-pin version has no on-chip ROM. External program storage memory interfaces via ten address pins and eight instruction input pins. Particularly useful for prototyping, the MC141099 permits real-time simulation of both the MC141000 and MC141200.

Hardware and software support is available for developing programs and debugging systems. This consists of one board and a software package using the M6800 EXORciser. Contact your local sales office for details of support equipment.

1-Bit Microprocessor

MC14500B

The MC14500B Industrial Control Unit (ICU) is a single-bit CMOS processor designed for use in systems requiring decisions based on successive single-bit information. An external ROM stores the control program. With a program counter (and output latches and input multiplexers, if required) the ICU in a system forms a stored program controller that replaces combinatorial logic. Applications include relay logic processing, serial data manipulation, and control. The ICU also may control an MPU or be controlled by an MPU.

- 16 Instructions
- DC to 1.0 MHz Operation at V_{DD} = 5 V
- On-Chip Clock (Oscillator)
- Executes One Instruction per Clock Cycle
- 3 V to 18 V Operation
- Noise Immunity Typically 45% of V_{DD}
- Quiescent Current 5.0 μAdc Typical at V_{DD} = 5 V
- Capable of Driving One Low-Power Schottky Load or Two Low-Power TTL Loads over Full Temperature Range

OUTLINE OF A TYPICAL ORGANIZATION FOR AN MC14500B-BASED SYSTEM

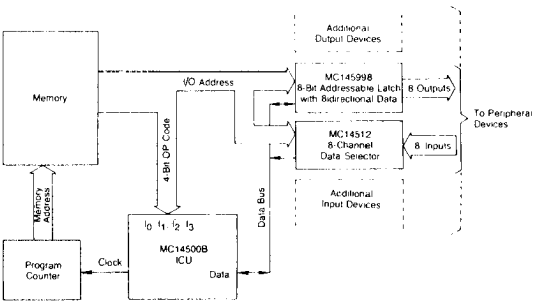

Chapter 4

Memory Circuits

Quality. This is a word that is heard very loudly in the semiconductor industry these days. The demand for quality will not, and indeed should not, subside. Motorola Memories have responded to this demand. Across the entire spectrum of MOS Memories offered by Motorola — dynamic RAMs, static RAMs, ROMs, programmable ROMs, and others — the underlying quality and reliability has set a standard for others to follow. Motorola's 64K dynamic RAM is setting the standard not only for memory density, but also for quality in the industry.

Table of Contents

	Page
Random-Access Memories (RAMs)	4-2
MOS Dynamic RAMs	4-2
MOS Static RAMs	4-2
CMOS Static RAMs	4-3
Erasable Programmable Read-Only Memories (EPROMs)	4-3
MOS EPROMs	4-3
MOS EEPROM	4-3
Read-Only Memories	4-4
MOS Static ROMs	4-4
Character Generators	4-4
Binary ROMs	4-4
CMOS ROMs	4-4

Memory Circuits

MOS Dynamic RAMs

Organization	Part Number	Access Time (ns max)	Power Supplies	No. of Pins
4096 x 1	MCM4027AC-2	150	+12, ±5 V	16
4096 x 1	MCM4027AC-3	200	+ 12, ±5 V	16
4096 x 1	MCM4027AC-4	250	+12, ±5 V	16
16384 x 1	MCM4116BP15	150	+12, ±5 V	16
16384 x 1	MCM4116BP20	200	+12, ±5 V	16
16384 x 1	MCM4116BP25	250	+12, ±5 V	16
16384 x 1	MCM4517P10	100	+5 V	16
16384 x 1	MCM4517P12	120	+5 V	16
16384 x 1	MCM4517P15	150	+5 V	16
16384 x 1	MCM4517P20	200	+5 V	16
65536 x 1	MCM6664AL12[1]*	120	+5 V	16
65536 x 1	MCM6664AL15[1]	150	+5 V	16
65536 x 1	MCM6664AL20[1]	200	+5 V	16
65536 x 1	MCM6665AL12*	120	+5 V	16
65536 x 1	MCM6665AL15	150	+5 V	16
65536 x 1	MCM6665AL20	200	+5 V	16

MOS Static RAMs (+5 Volts)

Organization	Part Number	Access Time (ns max)	No. of Pins
128 x 8	MCM6810	450	24
128 x 8	MCM68A10	360	24
128 x 8	MCM68B10	250	24
1024 x 4	MCM2114P20	200	18
1024 x 4	MCM2114P25	250	18
1024 x 4	MCM2114P30	300	18
1024 x 4	MCM2114P45	450	18
1024 x 4	MCM21L14P20	200	18
1024 x 4	MCM21L14P25	250	18
1024 x 4	MCM21L14P30	300	18
1024 x 4	MCM21L14P45	450	18
1024 x 1	MCM2115AC45[2]	45	16
1024 x 1	MCM2115AC55[2]	55	16
1024 x 1	MCM2115AC70[2]	70	16
1024 x 1	MCM21L15AC45[2]	45	16
1024 x 1	MCM21L15AC70[2]	70	16
1024 x 1	MCM2125AC45	45	16
1024 x 1	MCM2125AC55	55	16
1024 x 1	MCM2125AC70	70	16
1024 x 1	MCM21L25AC45	45	16
1024 x 1	MCM21L25AC70	70	16
4096 x 1	MCM6641P20	200	18
4096 x 1	MCM6641P25	250	18
4096 x 1	MCM6641P30	300	18
4096 x 1	MCM6641P45	450	18
4096 x 1	MCM66L41P20	200	18
4096 x 1	MCM66L41P25	250	18
4096 x 1	MCM66L41P30	300	18
4096 x 1	MCM66L41P45	450	18
4096 x 1	MCM2147C55	55	18
4096 x 1	MCM2147C70	70	18
4096 x 1	MCM2147C85	85	18

* To be introduced.
[1] Motorola's innovative pin #1 refresh
[2] All MOS memory outputs are three-state except the open collector MCM2115A series

Memory Circuits (Continued)

CMOS Static RAMs (+5 Volts)

Organization	Part Number	Access Time (ns max)	No. of Pins
256 x 4	MCM5101P65	650	22
256 x 4	MCM5101P80	800	22
256 x 4	MCM51L01P45	450	22
256 x 4	MCM51L01P65	650	22
4096 x 1	MCM65147C55*	55	18
4096 x 1	MCM65147C70*	70	18
4096 x 1	MCM65147C85	85	18
2048 x 8	MCM65116C12	120	24
2048 x 8	MCM65116C15	150	24
2048 x 8	MCM65116C20	200	24

MOS EPROMs

Organization	Part Number	Access Time (ns max)	Power Supplies	No. of Pins
1024 x 8	MCM2708C	450	+12, ±5 V	24
1024 x 8	MCM27A08C	300	+12, ±5 V	24
2048 x 8	TMS2716C	450	+12, ±5 V	24
2048 x 8	TMS27A16C	300	+12, ±5 V	24
4096 x 8	MCM2532C	450	+5 V	24
8192 x 8	MCM68764C	450	+5 V	24
8192 x 8	MCM68764C35	350	+5 V	24
8192 x 8	MCM68766C	450	+5 V	24
8192 x 8	MCM68766C35	350	+5 V	24

MOS EEPROMs

Organization	Part Number	Access Time (ns max)	Power Supplies	No. of Pins
16 x 16	MCM2801P	10μs	+5 V	14
32 x 32	MCM2802P*	15μs	+5 V	14
2048 x 8	MCM2815P**	450	+5 V	24
2048 x 8	MCM2815P35**	350	+5 V	24
2048 x 8	MCM2816	450	+5 V	24
4096 x 8	MCM2832P**	450	+5 V	24
4096 x 8	MCM2832P35**	350	+5 V	24
4096 x 8	MCM2832P25**	250	+5 V	24

* To be introduced
** To be introduced, byte erase

MOS Static ROMs (+ 5 Volts)
Character Generators[3]

Organization	Part Number	Access Time (ns max)	No. of Pins
128 x (7 x 5)	MCM6670P	350	18
128 x (7 x 5)	MCM6674P	350	18
128 x (9 x 7)	MCM66700P	350	24
128 x (9 x 7)	MCM66710P	350	24
128 x (9 x 7)	MCM66714P	350	24
128 x (9 x 7)	MCM66720P	350	24
128 x (9 x 7)	MCM66730P	350	24
128 x (9 x 7)	MCM66734P	350	24
128 x (9 x 7)	MCM66740P	350	24
128 x (9 x 7)	MCM66750P	350	24
128 x (9 x 7)	MCM66760P	350	24
128 x (9 x 7)	MCM66770P	350	24
128 x (9 x 7)	MCM66780P	350	24
128 x (9 x 7)	MCM66790P	350	24

[3] Character generators include shifted and unshifted characters, ASCII, alphanumeric control, math, Japanese, British, German, European and French symbols.

Binary ROMs (+5 Volts)

Organization	Part Number	Access Time (ns max)	No. of Pins
2048 x 8	MCM68A316AP	350	24
2048 x 8	MCM68A316EP	350	24
2048 x 8	MCM68A316EP91[4]	350	24
4096 x 8	MCM68A332P	350	24
4096 x 8	MCM68A332P2[4]	350	24
8192 x 8	MCM68A364P	350	24
8192 x 8	MCM68A364P3[4]	350	24
8192 x 8	MCM68B364P	250	24
8192 x 8	MCM68365P25	250	24
8192 x 8	MCM68365P35	350	24
8192 x 8	MCM68366P25	250	24
8192 x 8	MCM68366P35	350	24

CMOS ROMs (+5 Volts)

Organization	Part Number	Access Time (ns max)	No. of Pins
256 x 4	MCM14524	1200	16
2048 x 8	MCM65516P43	430	18
2048 x 8	MCM65516P43M[4]	430	18
2048 x 8	MCM65516P55	550	18

Chapter 5

CMOS Logic Circuits

Motorola's new family of standard-logic High-Speed CMOS integrated circuits provides the designer with a complete series of functions which approaches the ideal in performance.

All of the present CMOS logic family features, including low power dissipation and high noise immunity, combine with LSTTL speeds, pinouts and drives to offer the marketplace a new dimension in CMOS standard logic.

Motorola's family of standard CMOS monolithic integrated circuits provides the design engineer with several medium-speed series which approach the ideal in performance. Low-power dissipation, flexible power-supply design, high-noise immunity and fanout capability reduce printed circuit board layout. With design and manufacturing in Europe, full support is given to European customers.

Table of Contents

Complementary MOS—CMOS	5-2
High-Speed CMOS—HS CMOS	5-6

COMPLEMENTARY MOS—CMOS CIRCUITS

SELECTION GUIDE BY PART NUMBER

PART NUMBER	FUNCTION	SUFFIX	PINS	HI-REL OPTIONS SEE NOTE E
MC14000UB	DUAL 3-INPUT NOR GATE PLUS INVERTER	AL,CL,CP	14	1,3,4
MC14001B	QUAD 2-INPUT NOR GATE	AL,CL,CP	14	1,3,4
MC14001UB	QUAD 2-INPUT NOR GATE	AL,CL,CP	14	1,3,4
MC14002B	DUAL 4-INPUT NOR GATE	AL,CL,CP	14	1,3,4
MC14002UB	DUAL 4-INPUT NOR GATE	AL,CL,CP	14	1,3,4
MC14006B	18-BIT STATIC SHIFT REGISTER	AL,CL,CP	14	1,3,4
MC14007UB	DUAL COMPLEMENTARY PAIR PLUS INVERTER	AL,CL,CP	14	1,3,4
MC14008B	4-BIT FULL ADDER	AL,CL,CP	16	1,3,4
MC14011B	QUAD 2-INPUT NAND GATE	AL,CL,CP	14	1,3,4
MC14011UB	QUAD 2-INPUT NAND GATE	AL,CL,CP	14	1,3,4
MC14012B	DUAL 4-INPUT NAND GATE	AL,CL,CP	14	1,3,4
MC14012UB	DUAL 4-INPUT NAND GATE	AL,CL,CP	14	1,3,4
MC14013B	DUAL D FLIP-FLOP	AL,CL,CP	14	1,3,4
MC14014B	8-BIT STATIC SHIFT REGISTER	AL,CL,CP	16	1,3,4
MC14015B	DUAL 4-BIT STATIC SHIFT REGISTER	AL,CL,CP	16	1,3,4
MC14016B	QUAD ANALOG SWITCH/MULTIPLEXER	AL,CL,CP	14	*,2,3,4
MC14017B	DECADE COUNTER/DIVIDER	AL,CL,CP	16	1,3,4
MC14018B	PRESETTABLE DIVIDE-BY-N COUNTER	AL,CL,CP	16	1,3,4
4019B	SEE MC14519B-NORMALLY PIN FOR PIN EQUIVALENT			—
MC14020B	14-BIT BINARY COUNTER	AL,CL,CP	16	1,3,4
MC14021B	8-BIT STATIC SHIFT REGISTER	AL,CL,CP	16	1,3,4
MC14022B	OCTAL COUNTER/DIVIDER	AL,CL,CP	16	1,3,4
MC14023B	TRIPLE 3-INPUT NAND GATE	AL,CL,CP	14	1,3,4
MC14023UB	TRIPLE 3-INPUT NAND GATE	AL,CL,CP	14	1,3,4
MC14024B	7-STAGE RIPPLE COUNTER	AL,CL,CP	14	1,3,4
MC14025B	TRIPLE 3-INPUT NOR GATE	AL,CL,CP	14	1,3,4
MC14025UB	TRIPLE 3-INPUT NOR GATE	AL,CL,CP	14	1,3,4
MC14027B	DUAL J-K FLIP-FLOP	AL,CL,CP	16	1,3,4
MC14028B	BCD-TO-DECIMAL/BINARY-TO-OCTAL DECODER	AL,CL,CP	16	1,3,4
MC14029B	BINARY/DECADE UP/DOWN COUNTER	AL,CL,CP	16	1,3,4
4030B	SEE MC14070B - PIN FOR PIN EQUIVALENT			1
4031B	SEE MC14557B - FUNCTIONALLY EQUIVALENT			—
MC14032B	TRIPLE SERIAL ADDER (POSITIVE LOGIC)	AL,CL,CP	16	1,3,4
MC14034B	8-BIT UNIVERSAL BUS REGISTER	AL,CL,CP	24	1,3,4
MC14035B	4-BIT SHIFT REGISTER	AL,CL,CP	16	1,3,4
MC14038B	TRIPLE SERIAL ADDER (NEGATIVE LOGIC)	AL,CL,CP	16	1,3,4
MC14040B	12-BIT BINARY COUNTER	AL,CL,CP	16	1,3,4
MC14042B	QUAD LATCH	AL,CL,CP	16	1,3,4
MC14043B	QUAD NOR R-S LATCH	AL,CL,CP	16	1,3,4
MC14044B	QUAD NAND R-S LATCH	AL,CL,CP	16	*,2,3,4
MC14046B	PHASE-LOCKED LOOP	AL,CL,CP	16	*,2,3,4
4047B	SEE MC14528B - FUNCTIONALLY EQUIVALENT			—
MC14049UB	HEX INVERTER/BUFFER	AL,CL,CP	16	1,3,4
MC14050B	HEX BUFFER	AL,CL,CP	16	1,3,4
MC14051B	8-CHANNEL ANALOG MULTIPLEXER	AL,CL,CP	16	*,2,3,4
MC14052B	DUAL 4-CHANNEL ANALOG MULTIPLEXER	AL,CL,CP	16	*,2,3,4
MC14053B	TRIPLE 2-CHANNEL ANALOG MULTIPLEXER	AL,CL,CP	16	*,2,3,4
4055B	SEE MC14543B-FUNCTIONALLY EQUIVALENT			—
4056B	SEE MC14543B-NORMALLY PIN FOR PIN EQUIVALENT			—
4057B	SEE MC14581B-FUNCTIONALLY EQUIVALENT			—
MC14060B	14-BIT BINARY COUNTER AND OSCILLATOR	AL,CL,CP	14	4
4061	SEE MCM14537-FUNCTIONALLY EQUIVALENT			—
4063B	SEE MC14585B-FUNCTIONALLY EQUIVALENT			—
MC14066B	QUAD ANALOG SWITCH/MULTIPLEXER	AL,CL,CP	14	*,2,3,4
MC14068B	8-INPUT NAND GATE	AL,CL,CP	14	1,3,4
MC14069UB	HEX INVERTER	AL,CL,CP	14	1,3,4
MC14070B	QUAD EXCLUSIVE OR GATE	AL,CL,CP	14	1,3,4
MC14071B	QUAD 2-INPUT OR GATE	AL,CL,CP	14	1,3,4
MC14072B	DUAL 4-INPUT OR GATE	AL,CL,CP	14	1,3,4
MC14073B	TRIPLE 3-INPUT AND GATE	AL,CL,CP	14	1,3,4
MC14075B	TRIPLE 3-INPUT OR GATE	AL,CL,CP	14	1,3,4
MC14076B	QUAD D-TYPE REGISTER	AL,CL,CP	16	1,3,4
MC14077B	QUAD EXCLUSIVE NOR GATE	AL,CL,CP	14	1,3,4
MC14078B	8-INPUT NOR GATE	AL,CL,CP	14	1,3,4
MC14081B	QUAD 2-INPUT AND GATE	AL,CL,CP	14	1,3,4
MC14082B	DUAL 4-INPUT AND GATE	AL,CL,CP	14	1,3,4
4085B	SEE MC14506B-FUNCTIONALLY EQUIVALENT			—
MC14093B	QUAD 2-INPUT NAND SCHMITT TRIGGER	AL,CL,CP	14	*,2,3,4
MC14094B	8-BIT BUS COMPATIBLE SHIFT/STORE LATCH	AL,CL,CP	16	1,3,4
4098B	SEE MC14528B-NORMALLY PIN FOR PIN EQUIVALENT			—
MC14099B	8-BIT ADDRESSABLE LATCH	AL,CL,CP	16	1,3,4
40014B	SEE MC14584B-NORMALLY PIN FOR PIN EQUIVALENT			—
40085B	SEE MC14585B-NORMALLY PIN FOR PIN EQUIVALENT			—
40097B	SEE MC14503B-NORMALLY PIN FOR PIN EQUIVALENT			—
40101B	SEE MC14531B-FUNCTIONALLY EQUIVALENT			—
40106B	SEE MC14584B-NORMALLY PIN FOR PIN EQUIVALENT			—
40108B	SEE MC14580B-NORMALLY PIN FOR PIN EQUIVALENT			—
40160B	SEE MC14160B-PIN FOR PIN EQUIVALENT			—
40161B	SEE MC14161B-PIN FOR PIN EQUIVALENT			—
40162B	SEE MC14162B-PIN FOR PIN EQUIVALENT			—
40163B	SEE MC14163B-PIN FOR PIN EQUIVALENT			—
40174B	SEE MC14174B-PIN FOR PIN EQUIVALENT			—
40175B	SEE MC14175B-PIN FOR PIN EQUIVALENT			—
40181B	SEE MC14581B-PIN FOR PIN EQUIVALENT			—
40182B	SEE MC14582B-PIN FOR PIN EQUIVALENT			—
40192B	SEE MC14510B-FUNCTIONALLY EQUIVALENT			—
40193B	SEE MC14516B-FUNCTIONALLY EQUIVALENT			—
40194B	SEE MC14194B-NORMALLY PIN FOR PIN EQUIVALENT			—
40208B	SEE MC14580B-NORMALLY PIN FOR PIN EQUIVALENT			—
MC141000	4-BIT ONE-CHIP MICROCOMPUTER	L,P	28	
MC141099	4-BIT ONE-CHIP MICROCOMPUTER	L,P	48	
MC141200	4-BIT ONE-CHIP MICROCOMPUTER	L,P	40	
MC14160B	SYNCHRONOUS PROGRAMMABLE DECADE COUNTER	AL,CL,CP	16	1,3,4
MC14161B	SYNCHRONOUS PROGRAMMABLE 4-BIT BINARY COUNTER	AL,CL,CP	16	1,3,4
MC14162B	SYNCHRONOUS PROGRAMMABLE DECADE COUNTER	AL,CL,CP	16	1,3,4
MC14163B	SYNCHRONOUS PROGRAMMABLE 4-BIT BINARY COUNTER	AL,CL,CP	16	1,3,4
MC14174B	HEX D FLIP-FLOP	AL,CL,CP	16	1,3,4
MC14175B	QUAD D FLIP-FLOP	AL,CL,CP	16	1,3,4
MC14194B	4-BIT UNIVERSAL SHIFT REGISTER	AL,CL,CP	16	1,3,4
MC14210Q	4 × 4 CROSS POINT SWITCH	AL,CL,CP	16	4
MC14408	BINARY-TO-PHONE PULSE CONVERTER	L,P	16	4
MC14409	BINARY-TO-PHONE PULSE CONVERTER	L,P	16	4
MC14410	2-OF-8 TONE ENCODER	L,P	16	4
MC144100	DUPLEX MODE 32-SEGMENT LED DRIVER	P	24	4
MC14411	BIT-RATE FREQUENCY GENERATOR	L,P	24	4
MC144110	HEX D/A CONVERTER	P	18	4
MC144111	QUAD D/A CONVERTER	P	14	4
MC144115	16-SEGMENT LCD DRIVER	P	24	4
MC144117	4-DIGIT DUPLEX MODE LCD DECODER/DRIVER	P	24	4
MC14412	UNIVERSAL LOW SPEED MODEM	FL,VL, FP,VP	16	4
MC14413	PCM SAMPLED DATA FILTER, SEE NOTE A	L,P	16	—
MC14414	PCM SAMPLED DATA FILTER, SEE NOTE A	L,P	16	—
MC14415	QUAD PRECISION TIMER/DRIVER	EFL,FL,FP EVL,VL,VP	16	4
MC14416	PCM TIME SLOT ASSIGNER CIRCUIT	L,P	16	4
MC14417	PCM TIME SLOT ASSIGNER CIRCUIT	L,P	18	4
MC14418	PCM TIME SLOT ASSIGNER CIRCUIT	L,P	22	4
MC14419	2-OF-8 KEYPAD-TO-BINARY ENCODER	L,P	16	4
MC14424	REMOTE CONTROL TRANSMITTER	P	16	4
MC14426	8 × 14-BIT STATIC TUNING MEMORY	P	16	4
MC14429	TUNING MEMORY CONTROL, SEE NOTE B	P	18	4
MC14430	INPUT ADDRESS ENCODER	P	16	4
MC14433	3-1/2 DIGIT A/D CONVERTER, SEE NOTE C	L,P	24	—
MC14435	3-1/2 DIGIT A/D LOGIC SUBSYSTEM	EFL,FL,FP EVL,VL,VP	16	—
MC14443	6-CHANNEL A/D CONVERTER SUBSYSTEM	L,P	16	4
MC14444	8-CHANNEL A/D CONVERTER	P	40	4
MC14447	6-CHANNEL A/D CONVERTER SUBSYSTEM	L,P	16	4
4449UB	SEE MC14049UB - PIN FOR PIN EQUIVALENT			—
MC14466	LOW COST SMOKE DETECTOR	P	16	4
MC14469	ADDRESSABLE ASYNCHRONOUS RECEIVER/TRANSMITTER	L,P	40	4
MC14490	HEX CONTACT BOUNCE ELIMINATOR	EFL,FL,FP EVL,VL,VP	16	1,3,4
MC14493	BINARY-TO-7-SEGMENT DECODER/DRIVER	P	16	4
MC14494	BINARY-TO-7-SEGMENT DECODER/DRIVER	P	16	4
MC14495	BCD-TO-7-SEGMENT HEXADECIMAL LATCH/DECODER/DRIVER	L,P	16	4
MC14497	PCM REMOTE CONTROL TRANSMITTER	P	18	4
MC14499	4-DIGIT 7-SEGMENTLED DISPLAY DECODER/DRIVER	P	18	4
MC14500B	INDUSTRIAL CONTROL UNIT	AL,CL,CP	16	—
MC145000	48-SEGMENT MULTIPLEXED LCD DRIVER-MASTER	L,P	24	4
MC145001	44-SEGMENT MULTIPLEXED LCD DRIVER-SLAVE	L,P	18	4
MC14501UB	TRIPLE GATE	AL,CL,CP	16	1,3,4
MC14502B	STROBED HEX INVERTER/BUFFER	AL,CL,CP	16	1,3,4
MC145026	REMOTE CONTROL ENCODER	L,P	16	1,3,4
MC145027	REMOTE CONTROL DECODER	L,P	16	4
MC145028	REMOTE CONTROL DECODER	L,P	16	4
MC14503B	HEX 3-STATE BUFFER	AL,CL,CP	16	3,3,4
MC14504B	HEX TTL OR CMOS TO CMOS LEVEL SHIFTER	AL,CL,CP	16	3,4

PART NUMBER	FUNCTION	SUFFIX	PINS	HI-REL OPTIONS SEE NOTE E
MC14506B	DUAL EXPANDABLE AOI GATE	AL,CL,CP	16	1,3,4
MC14507	QUAD EXCLUSIVE OR GATE	AL,CL,CP	14	1,4
MC14508B	DUAL 4-BIT LATCH	AL,CL,CP	24	1,3,4
MC14510B	BCD UP/DDWN COUNTER	AL,CL,CP	16	1,3,4
MC145100	4 × 4 CRDSS PDINT SWITCH		16	*,2,3
MC145104	PLL FREQUENCY SYNTHESIZER	P	16	4
MC145106	PLL FREQUENCY SYNTHESIZER	P	18	4
MC145107	PLL FREQUENCY SYNTHESIZER	P	16	4
MC145109	PLL FREQUENCY SYNTHESIZER	P	16	4
MC14511B	BCD-TD-7 SEGMENT LATCH/DECDDER/ DRIVER	AL,CL,CP	16	*,2,3,4
MC145112	PLL FREQUENCY SYNTHESIZER	P	18	4
MC14512B	8-CHANNEL DATA SELECTDR	AL,CL,CP	16	1,3,4
MC14513B	BCD-TD-7 SEGMENT LATCH/DECDDER/ DRIVER WITH RIPPLE BLANKING	AL,CL,CP	18	4
MC14514B	4-BIT LATCH/4-TD-16 LINE DECODER (HIGH)		24	1,3,4
MC145143	PLL FREQUENCY SYNTHESIZER		16	4
MC145144	4-BIT DATA BUS INPUT PLL FREQ SYNTHESIZER	L,P	16	4
MC145145	4-BIT DATA BUS INPUT PLL FREQ SYNTHESIZER	L,P	18	4
MC145146	4-BIT DATA BUS INPUT PLL FREQ SYNTHESIZER	L,P	20	4
MC14515B	4-BIT LATCH/4-TD-16 LINE DECDDER (LDW)	AL,CL,CP	24	1,3,4
MC145151	PARALLEL INPUT PLL FREQUENCY SYNTHESIZER	L,P	28	4
MC145152	PARALLEL INPUT PLL FREQUENCY SYNTHESIZER	L,P	28	4
MC145155	SERIAL INPLT PLL FREQUENCY SYNTHESIZER	L,P	18	4
MC145156	SERIAL INPLT PLL FREQUENCY SYNTHESIZER	L,P	20	4
MC14516B	BINARY UP/DDWN CDLNTER	AL,CL,CP	16	1,3,4
MC14517B	DUAL 64-BIT STATIC SHIFT REGISTER	AL,CL,CP	16	1,3,4
MC14518B	DUAL BCD UP CDUNTER	AL,CL,CP	16	1,3,4
MC14519B	4-BIT AND/OR SELECTOR	AL,CL,CP	16	1,3,4
MC14520B	DUAL BINARY UP CDUNTER	AL,CL,CP	16	1,3,4
MC14521B	24-STAGE FREQUENCY DIVIQER	AL,CL,CP	16	1,3,4
MC14522B	PRDGRAMMABLE BCD DIVIDE-BY-N CDUNTER	AL,CL,CP	16	2,3,4
MC14526B	PRDGRAMMABLE BINARY DIVIDE-BY-N CDUNTER	AL,CL,CP	16	1,3,4
MC14527B	BCD RATE MULTIPLIER	AL,CL,CP	16	1,3,4
MC14528B	DUAL MDNDSTABLE MULTIVIBRATDR	AL,CL,CP	16	1,4
MC14529B	DUAL 4-CHANNEL ANALDG DATA SELECTDR	AL,CL,CP	16	*,2,3,4
MC1453DB	DUAL 5-INPUT MAJDRITY LDGIC GATE	AL,CL,CP	16	1,3,4
MC14531B	12-BIT PARITY TREE	AL,CL,CP	16	1,3,4
MC14532B	8-BIT PRIDRITY ENCDDER	AL,CL,CP	16	1,3,4
MC14534B	REAL TIME 5-DECADE COUNTER	AL,CL,CP	24	*,2,3,4
MC14536B	PRDGRAMMABLE TIMER	AL,CL,CP	16	2,3,4
MC14538B	DUAL PRECISIDN MDNDSTABLE MULTIVIBRATDR	AL,CL,CP	16	1,3,4
MC14539B	DUAL 4-CHANNEL DATA SELECTDR/ MULTIPLEXER	AL,CL,CP	16	2,3,4
MC14541B	PRDGRAMMABLE DSCILLATDR-TIMER	AL,CL,CP	14	1,3,4
MC14543B	BCD-TD-7-SEGMENT LATCH/DECDDER/DRIVER	AL,CL,CP	16	2,3,4
MC14544B	BCD-TD-7-SEGMENT LATCH/DECDDER/ DRIVER WITH RIPPLE BLANKING	AL,CL,CP	18	4
MC14547B	HIGH CURRENT BCD-TD-7-SEGMENT DECDDER/DRIVER	AL,CL,CP	16	4
MC14549B	SUCCESSIVE APPRDXIMATION REGISTER	AL,CL,CP	16	1,3,4
MC14551B	QUAD 2-CHANNEL ANALDG MULTIPLEXER	AL,CL,CP	16	3,4
MC14553B	3-DIGIT BCD COUNTER	AL,CL,CP	16	2,3,4
MC14554B	2 × 2 BIT PARALLEL BINARY MULTIPLIER	AL,CL,CP	16	2,3,4
MC14555B	DUAL BINARY TD 1-DF-4 DECDDER	AL,CL,CP	16	1,3,4
MC14556B	DUAL BINARY TD 1-DF-4 DECODER (INVERTING)	AL,CL,CP	16	1,3,4
MC14557B	1-TD-64 BIT VARIABLE LENGTH SHIFT REGISTER	AL,CL,CP	16	1,3,4
MC14558B	BCD-TD-7-SEGMENT DECDDER	AL,CL,CP	16	2,3,4
MC14559B	SUCCESSIVE APPRDXIMATIDN REGISTER	AL,CL,CP	16	1,3,4
MC14560B	NBCD ADDER	AL,CL,CP	16	2,3,4
MC14561B	9'S COMPLEMENTER	AL,CL,CP	14	2,3,4
MC14562B	128-BIT STATIC SHIFT REGISTER	AL,CL,CP	14	1,3,4
MC14566B	INDUSTRIAL TIME-BASE GENERATDR	AL,CL,CP	16	2,3,4
MC14568B	PHASE CDMPARATDR PRDGRAMMABLE CDUNTER	AL,CL,CP	16	1,3,4
MC14569B	DUAL PRDGRAMMABLE BCD/BINARY CDUNTER	AL,CL,CP	16	2,3,4
MC14572UB	HEX GATE	AL,CL,CP	16	1,3,4
MC14573	QUAD PRDGRAMMABLE DP AMP	AL,CL,CP	16	4
MC14574	QUAD PRDGRAMMABLE CDMPARATDR	AL,CL,CP	16	4
MC14575	PRDGRAMMABLE DUAL DP AMP/DUAL CDMPARATDR	AL,CL,CP	16	4
MC14580B	4 × 4 MULTIPDRT REGISTER	AL,CL,CP	24	2,3,4
MC14599B	8-BIT ADDRESSABLE LATCH	AL,CL,CP	18	4
MC146805E2	8-BIT MICRDPRDCESSDR EXPANDABLE	L,P	40	3,4
MC1468D5F2	B-BIT DNE-CHIP MICRDCDMPUTER	L,P	28	—
MC146805G2	8-BIT DNE-CHIP MICRDCDMPUTER	L,P	40	—
MC146818	REAL-TIME CLDCK/RAM	L,P	24	—
4734B	SEE MC14513B-NDRMALLY PIN FDR PIN EQUIVALENT			—
MC6170	300 BAUD MDDEM FILTER. SEE NDTE F	L,P	16	—

PART NUMDER	FUNCTION	SUFFIX	PINS	HI-REL OPTIONS SEE NOTE E
MC6203	REMDTE CDNTRDL RECEIVER. SEE NDTE F	P	28	—
MC6215	REMDTE CDNTRDL RECEIVER WITH DN SCREEN DISPLAY. SEE NDTE F	P	28	—
MC6220	4-BIT MICRDCDMPUTER UNIT WITH PLL FREQUENCY SYNTHESIZER. SEE NDTE F	P	28	—
MCM144102	16×16-BIT STATIC RAM		8	4
MCM14505	64× 1-BIT STATIC RAM	AL,CL,CP	14	*,2,3,4
MCM14524	256× 4-BIT READ DNLY MEMDRY SEE NDTE D	AL,CL,CP	16	—
MCM14537	256× 1-BIT STATIC RAM	AL,CL	16	4
MCM14552	64× 4-BIT STATIC RAM	AL,CL,CP	24	4
MCM5101	256× 4-BIT STATIC RAM	L,P	22	—
MCM65516	2048× 8-BIT MULTIPLEXED RDM	L,P	18	—

NOTE A: ADD SUFFIX 1. EXAMPLE MC14413L1
NOTE B: ADD SUFFIX B. EXAMPLE MC14429PB
NOTE C: FOR DETAILS OF SPECIAL SELECTION OF SYMMETRY AND BOUNCE CHARACTERISTICS, CONTACT DISTRIBUTOR OR SALES OFFICE
NOTE D: AVAILABLE ONLY BY SPECIAL ORDER
NOTE E: HI-REL OPTIONS
1 = QUALIFIED TO BS9000
2 = PROCESSED IN ACCORDANCE WITH BS9000. PARTS INDICATED WITH ASTERISK (*) ARE DUE TO BE QUALIFIED DURING 1ST QUARTER 1982
3 = MIL STD 883B CLASS B TYPE PROCESSED
4 = CHIP OR WAFER
NOTE F: N MOS DEVICE

RELIABILITY AND QUALITY ASSURANCE

OUTGOING QA SAMPLE PLAN

VISUAL/MECHANICAL
FUNCTIONAL
D.C. PARAMETRIC
A.C. PARAMETRIC
} 0.15% AQL, LEVEL II CUMULATIVE

RELIABILITY DATA

	BURN-IN READDUT (HDURS)		
	168	1D08	2016
NUMBER DF DEVICES	11D5	11D5	913
TDTAL DEVICE HDURS AT 125°C	0.2×10^6	1.1×10^6	1.8×10^6
EQUIVALENT DEVICE HDURS AT 85°C	4.8×10^6 550 YEARS	28.8×10^6 3297 YEARS	47.7×10^6 5448 YEARS
CUMULATIVE SUM DF REJECTS	2	3	6
FAILURE RATE (%/100D HOURS) AT 85°C		0.014	

DATA DERIVED FROM TESTS PERFORMED FROM JANUARY 1, 1981 TO JUNE 3D, 1981.

MOTOROLA HAS A POLICY OF CONTINUALLY IMPROVING ITS PRODUCT QUALITY AND RELIABILITY. INFORMATION CORRECT AT TIME OF GOING TO PRESS.

SELECTION GUIDE BY FUNCTION

DEVICE	FUNCTION
NAND GATES	
MC14011B	QUAD 2-INPUT NAND GATE
MC14011UB	QUAD 2-INPUT NAND GATE
MC14093B	QUAD 2-INPUT SCHMITT TRIGGER
MC14023B	TRIPLE 3-INPUT NAND GATE
MC14023UB	TRIPLE 3-INPUT NAND GATE
MC14012B	DUAL 4-INPUT NAND GATE
MC14012UB	DUAL 4-INPUT NAND GATE
MC14068B	8-INPUT NAND GATE
SEE ALSO MC14501UB AND MC14572UB	
NOR GATES	
MC14001B	QUAD 2-INPUT NOR GATE
MC14001UB	QUAD 2-INPUT NOR GATE
MC14025B	TRIPLE 3-INPUT NOR GATE
MC14025UB	TRIPLE 3-INPUT NOR GATE
MC14000UB	DUAL 3-INPUT NOR GATE PLUS INVERTER
MC14002B	DUAL 4-INPUT NOR GATE
MC14002UB	DUAL 4-INPUT NOR GATE
MC14078B	8-INPUT NOR GATE
SEE ALSO MC14501UB AND MC14572UB	
AND GATES	
MC14081B	QUAD 2-INPUT AND GATE
MC14073B	TRIPLE 3-INPUT AND GATE
MC14082B	DUAL 4-INPUT AND GATE
SEE ALSO MC14501UB	

DEVICE	FUNCTION

OR GATES

MC14071B	QUAD 2-INPUT OR GATE
MC14075B	TRIPLE 3-INPUT OR GATE
MC14072B	DUAL 4-INPUT OR GATE

SEE ALSO MC14501UB

COMPLEX GATES

MC14070B	QUAD EXCLUSIVE OR GATE
MC14077B	QUAD EXCLUSIVE NOR GATE
MC14501UB	TRIPLE GATE
MC14506B	DUAL EXPANDABLE AOI GATE
MC14507	QUAD EXCLUSIVE OR GATE
MC14519B	4-BIT AND/OR SELECTOR
MC14530B	DUAL 5-INPUT MAJORITY LOGIC GATE
MC14572UB	HEX GATE

INVERTERS/BUFFERS/LEVEL TRANSLATORS

MC14007UB	DUAL COMPLEMENTARY PAIR PLUS INVERTER
MC14049UB	HEX INVERTER/BUFFER
MC14050B	HEX BUFFER
MC14069UB	HEX INVERTER
MC14502B	STROBED HEX INVERTER/BUFFER
MC14503B	HEX 3-STATE BUFFER
MC14504B	HEX TTL OR CMOS TO CMOS LEVEL SHIFTER
MC14584B	HEX SCHMITT TRIGGER

SEE ALSO MC14000UB AND MC14572UB

SCHMITT TRIGGERS

MC14093B	QUAD 2-INPUT NAND SCHMITT TRIGGER
MC14583B	DUAL SCHMITT TRIGGER
MC14584B	HEX SCHMITT TRIGGER

FLIP-FLOPS/LATCHES

MC14013B	DUAL D FLIP-FLOP
MC14027B	DUAL J-K FLIP-FLOP
MC14042B	QUAD LATCH
MC14043B	QUAD NOR R-S LATCH
MC14044B	QUAD NAND R-S LATCH
MC14076B	QUAD D-TYPE REGISTER
MC14175B	QUAD D FLIP-FLOP
MC14508B	DUAL 4-BIT LATCH
MC14174B	HEX D FLIP-FLOP
MC14099B	8-BIT ADDRESSABLE LATCH
MC14597B	8-BIT BUS COMPATIBLE COUNTER/LATCH
MC14598B	8-BIT BUS COMPATIBLE ADDRESSABLE LATCH
MC14599B	8-BIT ADDRESSABLE LATCH

SHIFT REGISTERS

MC14035B	4-BIT SHIFT REGISTER
MC14194B	4-BIT UNIVERSAL SHIFT REGISTER
MC14015B	DUAL 4-BIT STATIC SHIFT REGISTER
MC14014B	8-BIT STATIC SHIFT REGISTER
MC14021B	8-BIT STATIC SHIFT REGISTER
MC14034B	8-BIT UNIVERSAL BUS REGISTER
MC14094B	8-BIT BUS COMPATIBLE SHIFT/STORE LATCH
MC14006B	18-BIT STATIC SHIFT REGISTER
MC14557B	1-TO-64 BIT VARIABLE LENGTH SHIFT REGISTER
MC14517B	DUAL 64-BIT STATIC SHIFT REGISTER
MC14562B	128-BIT STATIC SHIFT REGISTER

COUNTERS

MC14024B	7-STAGE RIPPLE COUNTER
MC14022B	OCTAL COUNTER/DIVIDER
MC14017B	DECADE COUNTER/DIVIDER
MC14018B	PRESETTABLE DIVIDE-BY-N COUNTER
MC14160B	SYNCHRONOUS PROGRAMMABLE DECADE COUNTER
MC14162B	SYNCHRONOUS PROGRAMMABLE DECADE COUNTER
MC14534B	REAL TIME 5-DECADE COUNTER
MC14029B	BINARY/DECADE UP/OOWN COUNTER
MC14020B	14-BIT BINARY COUNTER
MC14040B	12-BIT BINARY COUNTER
MC14060B	14-BIT BINARY COUNTER AND OSCILLATOR
MC14161B	SYNCHRONOUS PROGRAMMABLE 4-BIT BINARY COUNTER
MC14163B	SYNCHRONOUS PROGRAMMABLE 4-BIT BINARY COUNTER
MC14516B	BINARY UP/DOWN COUNTER
MC14520B	DUAL BINARY UP COUNTER
MC14526B	PROGRAMMABLE BINARY DIVIDE-BY-N COUNTER
MC14569B	DUAL PROGRAMMABLE BCD/BINARY COUNTER
MC14510B	BCD UP/DOWN COUNTER
MC14522B	PROGRAMMABLE BCD DIVIDE-BY-N COUNTER
MC14518B	DUAL BCD UP COUNTER
MC14553B	3-DIGIT BCD COUNTER

MULTIVIBRATORS/OSCILLATORS/TIMERS

MC14060B	14-BIT BINARY COUNTER AND OSCILLATOR
MC14415	QUAD PRECISION TIMER/DRIVER
MC14521B	24-STAGE FREQUENCY DIVIDER
MC14528B	DUAL MONOSTABLE MULTIVIBRATOR
MC14536B	PROGRAMMABLE TIMER
MC14538B	DUAL PRECISION MONOSTABLE MULTIVIBRATOR
MC14541B	PROGRAMMABLE OSCILLATOR-TIMER
MC14566B	INDUSTRIAL TIME-BASE GENERATOR

PLL/FREQUENCY SYNTHESIZERS

MC14046B	PHASE-LOCKED LOOP
MC14568B	PHASE COMPARATOR PROGRAMMABLE COUNTER
MC145104	PLL FREQUENCY SYNTHESIZER
MC145106	PLL FREQUENCY SYNTHESIZER
MC145107	PLL FREQUENCY SYNTHESIZER
MC145109	PLL FREQUENCY SYNTHESIZER
MC145112	PLL FREQUENCY SYNTHESIZER
MC145143	PLL FREQUENCY SYNTHESIZER
MC145144	4-BIT DATA BUS INPUT PLL FREQUENCY SYNTHESIZER
MC145145	4-BIT DATA BUS INPUT PLL FREQUENCY SYNTHESIZER
MC145146	4-BIT DATA BUS INPUT PLL FREQUENCY SYNTHESIZER
MC145151	PARALLEL INPUT PLL FREQUENCY SYNTHESIZER
MC145152	PARALLEL INPUT PLL FREQUENCY SYNTHESIZER
MC145155	SERIAL INPUT PLL FREQUENCY SYNTHESIZER
MC145156	SERIAL INPUT PLL FREQUENCY SYNTHESIZER

ADDERS/COMPARATORS

MC14008B	4-BIT FULL ADDER
MC14032B	TRIPLE SERIAL ADDER (POSITIVE LOGIC)
MC14038B	TRIPLE SERIAL ADDER (NEGATIVE LOGIC)
MC14560B	NBCD ADDER
MC14561B	9'S COMPLEMENTER
MC14582B	LOOK AHEAD CARRY BLOCK
MC14585B	4-BIT MAGNITUDE COMPARATOR

ALU'S/RATE MULTIPLIERS

MC14527B	BCD RATE MULTIPLIER
MC14554B	2 × 2-BIT PARALLEL BINARY MULTIPLIER
MC14581B	4-BIT ARITHMETIC LOGIC UNIT

PARITY GENERATOR/CHECKER

MC14531B	12-BIT PARITY TREE

ENCODERS/DECODERS

MC14028B	BCD-TO-DECIMAL/BINARY-TO-OCTAL DECODER
MC14419	2-OF-8 KEYPAD-TO-BINARY ENCODER
MC14430	INPUT ADDRESS ENCODER
MC14514B	4-BIT LATCH/4-TO-16 LINE DECODER (HIGH)
MC14515B	4-BIT LATCH/4-TO-16 LINE DECODER (LOW)
MC14532B	8-BIT PRIORITY ENCODER
MC14555B	DUAL BINARY TO 1-OF-4 DECODER
MC14556B	DUAL BINARY TO 1-OF-4 DECODER (INVERTING)
MC145026	REMOTE CONTROL ENCODER
MC145027	REMOTE CONTROL DECODER
MC145028	REMOTE CONTROL DECODER

DISPLAY DECODERS/DRIVERS

MC14511B	BCD-TO-7-SEGMENT LATCH/DECODER/DRIVER
MC14513B	BCD-TO-7-SEGMENT LATCH/DECODER/DRIVER WITH RIPPLE BLANKING
MC14543B	BCD-TO-7-SEGMENT LATCH/DECODER/DRIVER
MC14544B	BCD-TO-7-SEGMENT LATCH/DECODER/DRIVER WITH RIPPLE BLANKING
MC14547B	HIGH CURRENT BCD-TO-7-SEGMENT DECODER/DRIVER
MC14558B	BCD-TO-7-SEGMENT DECODER
MC14493	BINARY-TO-7-SEGMENT DECODER/DRIVER
MC14494	BINARY-TO-7-SEGMENT DECODER/DRIVER
MC14495	BCD-TO-7-SEGMENT HEXADECIMAL LATCH/DECODER/DRIVER

DEVICE	FUNCTION
MC14499	4-DIGIT 7-SEGMENT LED DISPLAY DECODER/DRIVER
MC144100	DUPLEX MODE 32-SEGMENT LED DRIVER
MC144115	16-SEGMENT LCD DRIVER
MC144117	4-DIGIT DUPLEX MODE LCD DECODER/DRIVER
MC145000	48-SEGMENT MULTIPLEXED LCD DRIVER-MASTER
MC145001	44-SEGMENT MULTIPLEXED LCD DRIVER-SLAVE

MULTIPLEXERS/DEMULTIPLEXERS/BILATERAL SWITCHES

MC14016B	QUAD ANALOG SWITCH/MULTIPLEXER
MC14066B	QUAD ANALOG SWITCH/MULTIPLEXER
MC14053B	TRIPLE 2-CHANNEL ANALOG MULTIPLEXER
MC14052B	DUAL 4-CHANNEL ANALOG MULTIPLEXER
MC14529B	DUAL 4-CHANNEL ANALOG DATA SELECTOR
MC14539B	DUAL 4-CHANNEL DATA SELECTOR/MULTIPLEXER
MC14051B	8-CHANNEL ANALOG MULTIPLEXER
MC14512B	8-CHANNEL DATA SELECTOR
MC14519B	4-BIT AND/OR SELECTOR
MC14007UB	DUAL COMPLEMENTARY PAIR PLUS INVERTER
MC14551B	QUAD 2-CHANNEL ANALOG MULTIPLEXER
MC14555B	DUAL BINARY TO 1-OF-4 DECODER
MC14556B	DUAL BINARY TO 1-OF-4 DECODER (INVERTING)

A/D, D/A CONVERTERS/LOGIC FUNCTIONS

MC14433	3-1/2 DIGIT A/D CONVERTER
MC14435	3-1/2 DIGIT A/D LOGIC SUBSYSTEM
MC14443	6-CHANNEL A/D CONVERTER SUBSYSTEM
MC14444	8-CHANNEL A/D CONVERTER
MC14447	6-CHANNEL A/D CONVERTER SUBSYSTEM
MC14549B	SUCCESSIVE APPROXIMATION REGISTER
MC14559B	SUCCESSIVE APPROXIMATION REGISTER
MC144110	HEX D/A CONVERTER
MC144111	QUAD D/A CONVERTER

OPERATIONAL AMPLIFIERS/COMPARATORS

MC14573	QUAD PROGRAMMABLE OP AMP
MC14574	QUAD PROGRAMMABLE COMPARATOR
MC14575	PROGRAMMABLE OUAL OP AMP/DUAL COMPARATOR

TELECOMMUNICATIONS FUNCTIONS

MC14408	BINARY-TO-PHONE PULSE CONVERTER
MC14409	BINARY-TO-PHONE PULSE CONVERTER
MC14410	2-OF-8 TONE ENCODER
MC14411	BIT-RATE FREQUENCY GENERATOR
MC14412	UNIVERSAL LOW SPEED MODEM
MC14413	PCM SAMPLED DATA FILTER
MC14414	PCM SAMPLED DATA FILTER
MC14416	PCM TIME SLOT ASSIGNER CIRCUIT
MC14417	PCM TIME SLOT ASSIGNER CIRCUIT
MC14418	PCM TIME SLOT ASSIGNER CIRCUIT
MC14419	2-OF-8 KEYPAD-TO-BINARY ENCOOER
MC142100	4 x 4 CROSS POINT SWITCH
MC145100	4 x 4 CROSS POINT SWITCH
MC6170	300 BAUD MODEM FILTER

REMOTE CONTROL FUNCTIONS

MC14424	REMOTE CONTROL TRANSMITTER
MC14469	ADDRESSABLE ASYNCHRONOUS RECEIVER/ TRANSMITTER
MC14497	PCM REMOTE CONTROL TRANSMITTER
MC145026	REMOTE CONTROL ENCODER
MC145027	REMOTE CONTROL DECODER
MC145028	REMOTE CONTROL DECODER
MC6203	REMOTE CONTROL RECEIVER
MC6215	REMOTE CONTROL RECEIVER WITH ON SCREEN OISPLAY

RADIO/T.V. FUNCTIONS

MC14426	8 x 14-BIT STATIC TUNING MEMORY
MC14429	TUNING MEMORY CONTROL
MCM144102	16 x 16 BIT STATIC RAM
MC14430	INPUT ADDRESS ENCODER
MC14424	REMOTE CONTROL TRANSMITTER
MC14497	PCM REMOTE CONTROL TRANSMITTER
MC6203	REMOTE CONTROL RECEIVER
MC6215	REMOTE CONTROL RECEIVER WITH ON SCREEN DISPLAY
MC6220	4-BIT MICROCOMPUTER UNIT WITH PLL FREQUENCY SYNTHESIZER

MEMORIES

MCM14505	64 x 1-BIT STATIC RAM
MCM14537	256 x 1-BIT STATIC RAM
MC14580B	4 x 4 MULTIPORT REGISTER
MCM14552	64 x 4-BIT STATIC RAM
MCM14524	256 x 4-BIT READ ONLY MEMORY
MCM5101	256 x 4-BIT STATIC RAM
MCM65516	2048 x 8-BIT MULTIPLEXED ROM
MC14426	8 x 14-BIT STATIC TUNING MEMORY
MCM144102	16 x 16-BIT STATIC RAM

MICROPROCESSORS/PERIPHERALS

MC14500B	INDUSTRIAL CONTROL UNIT
MC141000	4-BIT ONE-CHIP MICROCOMPUTER
MC141099	4-BIT ONE-CHIP MICROCOMPUTER
MC141200	4-BIT ONE-CHIP MICROCOMPUTER
MC146805E2	8-BIT MICROPROCESSOR, EXPANDABLE
MC146805F2	8-BIT ONE-CHIP MICROCOMPUTER
MC146805G2	8-BIT ONE-CHIP MICROCOMPUTER
MC146818	REAL-TIME CLOCK/RAM

OTHER COMPLEX FUNCTIONS

MC14466	LOW COST SMOKE DETECTOR
MC14469	ADDRESSABLE ASYNCHRONOUS RECEIVER/ TRANSMITTER
MC14490	HEX CONTACT BOUNCE ELIMINATOR

NEW PRODUCT PREVIEW

DEVICE	FUNCTION	INTRO-DUCTION
MC14067B	16-CHANNEL ANALOG SWITCH	82Q1
MC14097B	DUAL 8-CHANNEL ANALOG SWITCH	82Q1
MC 14400/1/2/3	PCM CODEC/FILTER/MONO CIRCUIT	82Q1
MC14442	A/D CONVERTER	82Q1
MC145157	PLL FREQUENCY SYNTHESIZER	82Q1
MC145158	PLL FREQUENCY SYNTHESIZER	82Q1
MC145159	PLL FREQUENCY SYNTHESIZER	82Q1
MC145431	TUNEABLE LOWPASS/NOTCH AND BANDPASS FILTER	82Q2
MC145433	TUNEABLE LOWPASS/NOTCH AND BANDPASS FILTER	82Q2
MC146823	8-BIT PIA	82Q1
MCM65116	2K x 8-BIT RAM	82Q2
MCM65147	4K x 1-BIT RAM	82Q1
MC54HCXX	HI-SPEED CMOS LOGIC FAMILY —55 TO +125°C	82Q1
MC74HCXX	HI-SPEED CMOS LOGIC FAMILY —40 TO +85°C	82Q1

ORDERING INFORMATION

MC14001B AL

- AL — DENOTES — OPERATING VOLTAGE RANGE
  — OPERATING TEMPERATURE RANGE
  — PACKAGE MATERIAL
- MC14001B — DENOTES FUNCTION

BURN-IN OPTION

BURN-IN IS AN OPTION AVAILABLE ON ALL CMOS PACKAGED PRODUCT. THE BENEFITS OF BURN-IN ARE:

- REDUCED INFANT MORTALITY
- REDUCED BOARD AND SYSTEM REWORK
- REDUCED EQUIPMENT OOWNTIME
- REDUCED FIELD FAILURES

BURN-IN IS PERFORMED AT 125°C FOR 168 HOURS AT 15V VDD. TO ORDER, ADD SUFFIX D. EXAMPLE - MC14001BALD.

SUFFIXES

AL	—	3 TO 18V, —55 TO +125°C, CERAMIC PACKAGE
CL	—	3 TO 18V, —40 TO + 85°C, CERAMIC PACKAGE
CP	—	3 TO 18V, —40 TO + 85°C, PLASTIC PACKAGE
L	—	LIMITED VOLTAGE RANGE, LIMITED TEMPERATURE RANGE, CERAMIC PACKAGE
P	—	LIMITED VOLTAGE RANGE, LIMITED TEMPERATURE RANGE, PLASTIC PACKAGE
EFL	—	3 TO 18V, —55 TO +125°C, CERAMIC PACKAGE
FL	—	3 TO 18V, —40 TO + 85°C, CERAMIC PACKAGE
FP	—	3 TO 18V, —40 TO + 85°C, PLASTIC PACKAGE
EVL	—	3 TO 6V, —55 TO +125°C, CERAMIC PACKAGE
VL	—	3 TO 6V, —40 TO + 85°C, CERAMIC PACKAGE
VP	—	3 TO 6V, —40 TO + 85°C, PLASTIC PACKAGE

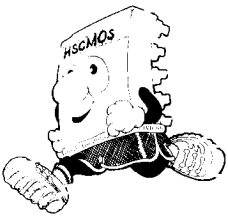

HIGH SPEED CMOS

HIGH-SPEED CMOS LOGIC

Complementary metal oxide semiconductors (CMOS) have existed for many years and traditional design and electrical characteristics have brought these products to a prominent position in the industry. In a world of rapid technical advances, Motorola has recognized the tremendous potential advantages of the CMOS technology and has developed a new logic family to meet the needs of a higher-performance marketplace.

The new family is called "High-Speed CMOS Logic" (MC74HCxx) and incorporates the present CMOS logic family features of low power dissipation and high noise immunity with the LSTTL features of high speed and wide fanout characteristics. The combination of these unique features gives CMOS a *new dimension* and has the potential of making this new family the most popular and the most useful logic family in the marketplace.

This new and innovative family of products is being developed and manufactured by Motorola Inc. — the industry's leading supplier of the standard metal-gate CMOS family (MC14000 series). Experience gained over the past ten years in the logic marketplace is fully utilized in the design, manufacture and marketing of these products. Motorola's strong commitment to CMOS technology is further evidenced by the introduction of this new and innovative logic family. "High-Speed CMOS Logic' will offer a cost-efficient and high-performance product line to an ever-growing segment of integrated circuit users in all markets.

PHILOSOPHY OF THE HIGH-SPEED CMOS FAMILY

The approach to the High-Speed CMOS family is quite straightforward. It provides for a full family of products which are pin-for-pin compatible with many of the popular LSTTL and CMOS devices. This family will provide both (1) higher-speed alternatives to existing CMOS parts and (2) equivalent or higher-speed CMOS replacements for the most popular LSTTL devices.

Among the key family features are:

(1) LSTTL speeds for the general family (typical gate delays of 10–15 ns)
(2) LSTTL output drive (4 mA sink: a fanout of 10 LS loads)
(3) LSTTL operating frequencies (30 MHz)
(4) CMOS high voltage noise immunity (typically 45% V_{CC}; 2–3 times improvement over LS)
(5) Wide range of power supply voltages (3–6 volts operating range)
(6) CMOS low static power consumption ($< 1\ \mu W$ typically)

With today's breadth of available CMOS MSI function types plus the added performance of High-Speed CMOS, the designer need not sacrifice speed for power consumption. Add the other classical advantages of CMOS, including high noise immunity and wide power supply and temperature ranges, and the decision to go with High-Speed CMOS becomes evident. This new family will provide for the design of more cost-effective systems to serve high speed market applications.

FEATURES OF MOTOROLA'S HIGH-SPEED CMOS FAMILY:

- Guaranteed Propagation Delay—15 ns for 74HC00
- Wide Operating Range—3 to 6 V
- High Noise Immunity—typically 45% of supply voltage
- Low Quiescient Power Dissipation
- Diode Protection—All inputs
- High Fanout—10 LSTTL loads (4 mA drive)
- Direct Pin Compatibility with LSTTL parts (HCXXX) and/or CMOS parts (HC4XXX)

KEY

- 74-type devices (Commercial Temperature Range) are available in plastic (N suffix) or ceramic (J suffix) DIP
- 54-type devices (Military Temperature Range) are available in ceramic (J suffix) DIP
- Parts shown are functional equivalent *except* when preceded by an asterisk (*), indicating a suggested alternative

The Functions listed will be introduced during 1982

High-Speed Device Number MC74/MC54	Function	Functional Equivalent LSTTL Device 74/54	Functional Equivalent CMOS Device MC1XXXX or CDXXXX	Direct Pin Compatibility	Number of Pins
DECODERS/ENCODERS					
HC42	1-of-10 Decoder	LS42	*4028	LS	16
HC138	1-of-8 Decoder	LS138	*4028	LS	16
HC139	Dual 1-of-4 Decoder	LS139	4555	LS/CMOS	16
HC147	10-to-4 Priority Encoder	LS147	*4532	LS	16
HC151	8-Input Multiplexer	LS151	*4512	LS	16
HC153	Dual 4-Input Multiplexer	LS153	4539	LS/CMOS	16
HC154	4-to-16 Decoder	LS154	*4514	LS	24
HC157	Quad 2-Input Multiplexer	LS157	*4519	LS	16
HC158	Quad 2-Input Multiplexer, Inverted	LS158		LS	16
HC251	8-Input Multiplexer, 3-State	LS251	*4512	LS	16
HC253	Dual 4-Input Multiplexer, 3-State	LS253	*4539	LS/CMOS	16
HC257	Quad 2-Input Multiplexer, 3-State	LS257	*4519	LS	16
HC354	8-Input Multiplexer, 3-State	LS354	*4512	LS	20
HC356	8-Input Multiplexer, 3-State	LS356	*4512	LS	20
HC4511	BCD-to-7-Segment Latch/Decoder/Driver	*(LS46-LS49)	4511	LS/CMOS	16
HC4514	4-bit Latch/4-to-16 Line Decoder		4514	CMOS	24
HC4543	LCD BCD-to-7-Segment Latch/Decoder/Driver	*(LS46-LS49)	4543	CMOS	16
GATES AND BUFFERS					
HC00	Quad 2-Input NAND	LS00	4011	LS	14
HC02	Quad 2-Input NOR	LS02	4001	LS	14
HC04	Hex Inverter	LS04	4069	LS/CMOS	14
HC08	Quad 2-Input AND	LS08	4081	LS	14
HC10	Triple 3-Input NAND	LS10	4023	LS	14
HC11	Triple 3-Input AND	LS11	4073	LS	14
HC14	Hex Schmitt Trigger Inverter	LS14	4584	LS/CMOS	14
HC20	Dual 4-Input NAND	LS20	4012	LS	14
HC27	Triple 3-Input NOR	LS27	4025	LS	14
HC30	8-Input NAND	LS30	4068	LS	14
HC32	Quad 2-Input OR	LS32	4071	LS	14
HC86	Quad 2-Input Exclusive OR	LS86	4070	LS	14
HC132	Quad 2-Input Schmitt Trigger NAND	LS132	4093	LS	14
HC133	13-Input NAND	LS133		LS	16
HC266	Quad 2-Input Exclusive NOR	LS266 (Open Collector)	4077	LS/CMOS	14
HC365	Hex 3-State Bus Driver with Common 2-Input NOR Enable	LS365A		LS	16
HC366	Hex 3-State Bus Driver with Common 2-Input NOR Enable, Inverted	LS366A		LS	16
HC367	Hex 3-State Bus Driver with Separate 2-Bit and 4-Bit Sections	LS367A	4503	LS/CMOS	16
HC368	Hex 3-State Bus Driver with Separate 2-Bit and 4-Bit Sections, Inverted	LS368A		LS	16
HC4002	Dual 4-Input NOR	*LS25	4002	CMOS	14
HC4049	Hex Buffer, Inverted		4049	CMOS	16
HC4050	Hex Buffer		4050	CMOS	16
HC4075	Triple 3-Input OR		4075	CMOS	14
HC4078	8-Input NOR		4078	CMOS	14

High-Speed Device Number MC74/MC54	Function	Functional Equivalent LSTTL Device 74/54	Functional Equivalent CMOS Device MC1XXXX or CDXXXX	Direct Pin Compatibility	Number of Pins
FLIP-FLOPS/LATCHES					
HC73	Dual J-K with Clear	LS73A	*4027	LS	14
HC74	Dual D with Set and Clear, Positive-Edge Triggered	LS74A	4013	LS	14
HC75	4-Bit D Latch	LS75	*4042	LS	16
HC76	Dual J-K with Set and Clear	LS76A	*4027	LS	16
HC107	Dual J-K with Clear	LS107A	*4027	LS	14
HC109	Dual J-K with Set and Clear, Positive-Edge Triggered	LS109A	*4027	LS	16
HC112	Dual J-K with Set and Clear, Negative-Edge Triggered	LS112A	*4027	LS	16
HC174	Hex D Flip-Flop	LS174	4174	LS/CMOS	16
HC175	Quad D Flip-Flop	LS175	4175	LS/CMOS	16
HC259	8-Bit Addressable Latch	LS259	*4099	LS	16
HC373	Octal Transparent Latch, 3-State	LS373		LS	20
HC374	Octal D Flip-Flop, 3-State	LS374		LS	20
HC533	Octal Transparent Latch, 3-State, Inverted	LS533		LS	20
HC534	Octal D Flip-Flop, 3-State, Inverted	LS534		LS	20
HC563	Octal Transparent Latch, 3-State, Inverted	LS576		LS	20
HC564	Octal D Flip-Flop, 3-State, Inverted	LS580		LS	20
HC573	Octal Transparent Latch, 3-State	LS573		LS	20
HC574	Octal D Flip-Flop, 3-State	LS574		LS	20
TRANSCEIVERS/LINE DRIVERS					
HC240	HC240 Octal Buffer/Line Driver, 3-State, Inverted	LS240		LS	20
HC241	HC241 Octal Buffer/Line Driver, 3-State	LS241		LS	20
HC242	HC242 Quad Bus Transceiver, Inverted	LS242		LS	14
HC243	HC243 Quad Bus Transceiver	LS243		LS	14
HC244	HC244 Octal Buffer/Line Driver, 3-State	LS244		LS	20
HC245	HC245 Octal Bus Transceiver, 3-State	LS245		LS	20
HC640	HC640 Octal Bus Transceiver, 3-State	LS640		LS	20
HC643	HC643 Octal Bus Transceiver, 3-State	LS643		LS	20
HC645	HC645 Octal Bus Transceiver, 3-State	LS645		LS	20
HC646	HC646 Octal Bus Transceiver, 3-State	LS646		LS	24
HC648	HC648 Octal Bus Transceiver, 3-State	LS648		LS	24
COUNTERS					
HC160	BCD Decade Counter, Asynchronous Reset	LS160A	4160	LS/CMOS	16
HC161	4-Bit Binary Counter, Asynchronous Reset	LS161A	4161	LS/CMOS	16
HC162	BCD Decade Counter, Synchronous Reset	LS162A	4162	LS/CMOS	16
HC163	4-Bit Binary Counter, Synchronous Reset	LS163A	4163	LS/CMOS	16
HC192	BCD Decade Up/Down Counter	LS192	4510	LS	16
HC193	4-Bit Binary Up/Down Counter	LS193	4516	LS	16
HC390	Dual Decade Counter	LS390	*4518	LS	16
HC393	Dual 4-Bit Binary Counter	LS393	*4520	LS	14
HC4017	Decade Counter/Divider		4017	CMOS	16
HC4020	14-Bit Binary Counter		4020	CMOS	16
HC4040	12-Bit Binary Counter		4040	CMOS	16
HC4060	14-Stage Binary Counter		4060	CMOS	16
REGISTERS					
HC164	8-Bit Serial-to-Parallel Shift Register	LS164	*4034	LS	14
HC165	8-Bit Parallel-to-Serial Converter	LS165	*4021	LS	16
HC173	4-Bit D Register, 3-State	LS173	4076	LS/CMOS	16
HC194	4-Bit Bidirectional Universal Shift Register	LS194A	4194	LS/CMOS	16
HC195	Universal 4-Bit Shift Register	LS195A	*4035	LS	16
HC299	8-Bit Universal Shift/Store Register, 3-State	LS299	*4094	LS	20
MISCELLANEOUS					
HC85	4-Bit Magnitude Comparator	LS85	*4585	LS	16
HC221	Dual Monostable Multivibrator	LS221	*453B or *452B	LS	16
HC280	9-Bit Odd/Even Parity Generator/Checker	LS280	*4531	LS	14
HC688	8-Bit Equality Comparator				20
HC4301	Octal Latch Level Translator, Inverted		*4504		20
HC4302	Octal Latch/Level Translator		*4504		20
HC4303	Octal Flip-Flop Level Translator, Inverted		*4504		20
HC4304	Octal Flip-Flop/Level Translator		*4504		20
HC4305	Octal Buffer Level Translator, Inverted		*4504		20
HC4306	Octal Buffer/Level Translator		*4504		20
HC453B	Dual Precision Retriggerable/Resettable Monostable Multivibrator	*LS221	453B	CMOS	16

MAXIMUM RATINGS

Symbol	Rating	Value	Unit
V_{CC}	DC Supply Voltage	−0.5 to 7.0	V
V_{in}	Input Voltage	−0.5 to V_{CC} + 0.5	V
T_{stg}	Storage Temperature	−65 to +150	°C
P_D	Power Dissipation	500	mW
T_L	Lead Temperature (10 second Soldering)	300	°C

RECOMMENDED OPERATING CONDITIONS

Symbol	Rating	Min	Max	Unit
V_{CC}	DC Supply Voltage	3.0	6.0	V
V_{in}	Input Voltage	0	V_{CC}	V
T_A	Operating Temperature— 74 Series 54 Series	−40 −55	+85 +125	°C

5

DC ELECTRICAL CHARACTERISTICS (V_{CC} = 5 V ± 10%)

Symbol	Parameter	Test Conditions			Min*	Max*	Unit
V_{IH}	High-Level Input Voltage	V_O = 0.5 V or V_{CC} − 0.5 V, I_O ≤ 1 μA		V_{CC} = 4.5 V V_{CC} = 5.5 V	3.15 3.85		V
V_{IL}	Low-Level Input Voltage	V_O = 0.5 V or V_{CC} − 0.5 V, I_O = ≤ 1 μA		V_{CC} = 4.5 V V_{CC} = 5.5 V		0.90 1.10	V
V_{OH}	High-Level Output Voltage	V_{in} = V_{CC} or GND, I_O ≤ 1 μA (CMOS) V_{in} = V_{CC} or GND, V_{CC} = 4.5 V I_O = 4 mA (74 Series) I_O = 3.4 mA (54 Series)			V_{CC} − 0.05 V_{CC} − 0.8		V
V_{OL}	Low-Level Output Voltage	V_{in} = V_{CC} or GND, I_O ≤ 1 μA (CMOS) V_{in} = V_{CC} or GND, V_{CC} = 4.5 V, I_O = 4 mA (74 Series) I_O = 3.4 mA (54 Series)				0.05 0.4	V
I_{CC}	Quiescent Current (Per Package)	V_{in} = V_{CC} or GND I_O = 0 μA	SSI Buffer FF MSI Driver	25°C		2 4 8	μA
			SSI Buffer FF MSI Driver	85°C		20 40 80	
			SSI Buffer FF MSI Driver	125°C		40 80 160	
I_{in}	Input Current	V_{in} = V_{CC} or GND				±1.0	μA

*Unless otherwise specified, minimum and maximum limits are applicable over the full temperature range

SWITCHING CHARACTERISTICS (V_{CC} = 5 V, T_A = 25°C)

Symbol	Parameter	Test Conditions	Typ	Limit	Unit
f_{max}	Maximum Clock Frequency	C_L = 15 pF C_L = 50 pF	40 30	30 20	MHz
t_{PHL}/t_{PLH}	Maximum Propagation Delay, Clock to Q	C_L = 15 pF C_L = 50 pF	20 25	30 35	ns
t_{PHL}/t_{PLH}	Maximum Propagation Delay, Clear to Q	C_L = 15 pF C_L = 50 pF	20 25	30 35	ns
t_{su}	Minimum Setup Time, Data to Clock		10	20	ns
t_h	Minimum Hold Time, Clock to Data			0	ns
t_{sr}	Minimum Clear Recovery Time		10	25	ns
t_w	Minimum Clock or Clear Pulse Width		10	25	ns
t_{TLH}	Maximum Input Clock Rise Time		1000	500	ns

Chapter 6

Linear Circuits

Starting with the now all pervasive operational amplifier, linear integrated circuit technology currently influences the design and architecture of equipment for all major markets. Amplifiers? Of course! But that's only a starting point. Linear circuits have taken the erstwhile expensive and exclusive voltage regulator and turned it into a commodity item for all electronic equipment. They have reduced the myriad of discrete parts formerly involved in consumer products to just a handful of IC packages and they've brought electronic capabilities a giant step closer to widespread use by mass markets.

Table of Contents

	Page
Operational Amplifiers	6- 2
Voltage Regulators	6- 6
High-Frequency Amplifiers	6-15
Special-Purpose Circuits	6-17

Operational Amplifiers

Motorola offers a broad line of operational amplifiers to meet a wide range of usages. From low-cost industry-standard types to high precision circuits, the span encompasses a large range of performance capabilities. These linear integrated circuits are available as single, dual, and quad monolithic devices in a variety of package styles as well as standard chips.

Single Operational Amplifiers

Noncompensated

Device	I_{IB} µA max	V_{IO} mV max	TC_{VIO} µV/°C typ	I_{IO} nA max	A_{vol} V/V min	BW(Av=1) MHz typ	SR(Av=1) V/µs typ	Supply Voltage V min	Supply Voltage V max	Description	Packages
Military Temperature Range (-55° C to +125° C)											
LM101A	0.075	2.0	10	10	50K	1.0	0.5	±3.0	±22	General Purpose	601,693
LM108	0.002	2.0	3.0	0.2	50K	1.0	0.3	±3.0	±20	Precision	601,693
LM108A	0.002	0.5	1.0	0.2	80K	1.0	0.3	±3.0	±20	Precision	601,693
MC1539	0.5	3.0	15	60	50K	2.0	4.2	±4.0	±18	High Slew Rate	601,632
MC1709	0.5	5.0	15	200	25K	1.0	0.3	±3.0	±18	General Purpose	601,632,693
MC1709A	0.6	3.0	5.0	100	25K	1.0	0.5	±3.0	±18	High Performance MC1709	601,632
MC1748	0.5	5.0	15	200	50K	1.0	0.5	±3.0	±22	General Purpose	601,693
Commercial Temperature Range (0° C to +70° C)											
LM301A	0.25	7.5	10	50	25K	1.0	0.5	±3.0	±18	General Purpose	601,626,693,751
LM308	7.0	7.5	15	1.0	25K	1.0	0.3	±3.0	±18	Precision	601,626,693
LM308A	7.0	0.5	5.0	1.0	80K	1.0	0.3	±3.0	±18	Precision	601,626,693
MC1439	1.0	7.5	15	100	15K	2.0	4.2	±6.0	±18	High Slew Rate	601,626,632,646
MC1709C	1.5	7.5	15	500	15K	1.0	0.3	±3.0	±18	General Purpose	601,626,632, 646,693
MC1748C	0.5	6.0	15	200	20K	1.0	0.5	±3.0	±18	General Purpose	601,626,693
Industrial Temperature Range (-25° C to +85° C)											
LM201A	0.075	2.0	10	10	50K	1.0	0.5	±3.0	±22	General Purpose	601,626,693,751
LM208	0.002	2.0	3.0	0.2	50K	1.0	0.3	±3.0	±20	Precision	601,632,693
LM208A	0.002	0.5	1.0	0.2	80K	1.0	0.3	±3.0	±20	Precision	601,632,693

Internally Compensated

Device	I_{IB} µA max	V_{IO} mV max	TC_{VIO} µV/°C typ	I_{IO} nA max	A_{vol} V/V min	BW(Av=1) MHz typ	SR(Av=1) V/µs typ	Supply Voltage V min	Supply Voltage V max	Description	Packages
Military Temperature Range (-55° C to +125° C)											
LF155	100pA	5.0	5.0	20pA	50K	1.0	5.0	±5.0	±22	FET Input	601
LF155A	50pA	2.0	3.0	10pA	50K	1.0	5.0	±5.0	±22	FET Input	601
LF156	100pA	5.0	5.0	20pA	50K	2.0	15	±5.0	±22	FET Input	601
LF156A	50pA	2.0	3.0	10pA	50K	2.0	15	±5.0	±22	FET Input	601
LF157	100pA	5.0	5.0	20pA	50K	3.0	75	±5.0	±22	Wideband FET Input	601
LF157A	50pA	2.0	3.0	10pA	50K	3.0	75	±5.0	±22	Wideband FET Input	601
LM107	0.075	2.0	10	10	50K	1.0	0.5	±3.0	±22	General Purpose	601,693
MC1536	0.02	5.0	10	3.0	100K	1.0	2.0	±15	±40	High Voltage	601
MC1556	0.015	4.0	10	2.0	100K	1.0	2.5	±3.0	±22	High Performance	601,632
MC1733	0.20	—	—	3.0µA	90	90	—	±4.0	±8.0	Differential Wideband Video Amp	603,632
MC1741	0.5	5.0	15	200	50K	1.0	0.5	±3.0	±22	General Purpose	601,632,693
MC1741N	0.5	5.0	15	200	50K	1.0	0.5	±3.0	±22	Low Noise	601,632,693
MC1741S	0.5	5.0	15	200	50K	1.0	10	±3.0	±22	High Slew Rate	601,632,693
MC1776	0.0075	5.0	15	3.0	200K	1.0	0.2	±1.5	±18	µPower, Programmable	601,632
MC35001	100pA	10	10	100pA	25K	4.0	13	±5.0	±22	TRIMFET Input	601,693
MC35001A	75pA	2.0	10	25pA	50K	4.0	13	±5.0	±22	TRIMFET Input	601,693
MC35001B	100pA	5.0	10	50pA	50K	4.0	13	±5.0	±22	TRIMFET Input	601,693
Commercial Temperature Range (0° C to +70° C)											
LF355	200pA	10	5.0	50pA	50K	1.0	5.0	±5.0	±18	FET Input	601
LF355A	50pA	2.0	1.0	10pA	50K	1.0	5.0	±5.0	±18	FET Input	601
LF355B	100pA	5.0	5.0	20pA	50K	2.5	5.0	±5.0	±22	FET Input	601,626,693
LF356	200pA	10	5.0	50pA	50K	2.0	15	±5.0	±18	FET Input	601
LF356A	50pA	2.0	1.0	10pA	50K	2.0	15	±5.0	±18	FET Input	601
LF356B	100pA	5.0	5.0	20pA	50K	5.0	12	±5.0	±22	FET Input	601,626,693
LF357	200pA	10	5.0	50pA	50K	3.0	75	±5.0	±18	Wideband FET Input	601
LF357A	50pA	2.0	1.0	10pA	50K	3.0	75	±5.0	±18	Wideband FET Input	601
LF357B	100pA	5.0	5.0	20pA	50K	20	50	±5.0	±22	FET Input	601,626,693
LM307	0.25	7.5	10	50	25K	1.0	0.5	±3.0	±18	General Purpose	601,626,693
MC1436	0.04	10	12	10	70K	1.0	2.0	±15	±34	High Voltage	601
MC1456	0.03	10	12	10	70K	1.0	2.5	±3.0	±18	High Performance	601,632
MC1733C	30	—	—	5.0µA	80	90	—	±4.0	±8.0	Differential Wideband Video Amp	601,632,646
MC1741C	0.5	6.0	15	200	20K	1.0	0.5	±3.0	±18	General Purpose	601,632,626, 646,693
MC1741NC	0.5	6.0	15	200	20K	1.0	0.5	±3.0	±18	Low Noise	601,632,626, 646,693
MC1741SC	0.5	6.0	15	200	20K	1.0	10	±3.0	±18	High Slew Rate	601,632,626, 646,693
MC1776C	0.003	6.0	15	3.0	100K	1.0	0.2	±1.5	±18	µPower,Programmable	601
MC3476	0.05	6.0	15	25	50K	1.0	0.2	±1.5	±18	Low Cost µPower,Programmable	601,626
MC34001	200pA	10	10	100pA	25K	4.0	13	±5.0	±18	TRIMFET Input	601,626,693,751
MC34001A	100pA	2.0	10	50pA	50K	4.0	13	±5.0	±18	TRIMFET Input	601,626,693,751
MC34001B	200pA	5.0	10	100pA	50K	4.0	13	±5.0	±18	TRIMFET Input	601,626,693,751
Industrial Temperature Range (-25° C to +85° C)											
LM207	0.075	2.0	10	10	50K	1.0	0.5	±3.0	±22	General Purpose	601
LF255	100pA	5.0	5.0	20pA	50K	2.5	5.0	±5.0	±22	FET Input	601,626,693
LF256	100pA	5.0	5.0	20pA	50K	5.0	12	±5.0	±22	FET Input	601,626,693
LF257	100pA	5.0	5.0	20pA	50K	20	50	±5.0	±22	FET Input	601,626,693

Dual Operational Amplifiers

Internally Compensated

Device	I_{IB} µA max	V_{IO} mV max	TC_{VIO} µV/°C typ	I_{IO} nA max	A_{vol} V/V min	BW(Av = 1) MHz typ	SR(Av = 1) V/µs typ	Supply Voltage V min	Supply Voltage V max	Description	Packages
Military Temperature Range (-55° C to +125° C)											
LM158	0.15	5.0	10	30	50K	1.0	0.6	±1.5 +3.0	±18 +36	Split Supplies Single Supply (Low Power Consumption)	601,632,693
MC1558	0.5	5.0	10	200	50K	1.1	0.8	±3.0	±22	Dual MC1741	601,632,693
MC1558N	0.5	5.0	10	200	50K	1.1	0.8	±3.0	±22	Low Noise	601,632,693
MC1558S	0.5	5.0	10	200	50K	1.0	10	±3.0	±22	High Slew Rate	601,632,693
MC1747	0.5	5.0	10	200	50K	1.0	0.5	±3.0	±22	Dual MC1741	601,632
MC3558	0.5	5.0	10	50	50K	1.0	0.6	±1.5 +3.0	±18 +36	Split Supplies Single Supply	601,632,693
MC4558	0.5	5.0	10	200	50K	4.0	1.5	±3.0	±22	High Frequency	601,632,693
MC35002	100pA	10	10	100pA	25K	4.0	13	±5.0	±22	TRIMFET Input	601,693
MC35002A	75pA	2.0	10	25pA	50K	4.0	13	±5.0	±22	TRIMFET Input	601,693
MC35002B	100pA	5.0	10	50pA	50K	4.0	13	±5.0	±22	TRIMFET Input	601,693
MC35022	150pA	2.0	5.0	70pA	25K	4.0	13	±5.0	±22	Precision TRIMFET Input	601,693
MC35022A	60pA	0.5	5.0	25pA	50K	4.0	13	±5.0	±22	Precision TRIMFET Input	601,693
MC35022B	75pA	1.0	5.0	50pA	50K	4.0	13	±5.0	±22	Precision TRIMFET Input	601,693
Commercial Temperature Range (0° C to +70° C)											
LM358	0.25	6.0	7.0	50	25K	1.0	0.6	±1.5 +3.0	±18 +36	Split Supplies Single Supply (Low Power Consumption)	601,626,693,751
MC1458	0.5	6.0	10	200	20K	1.1	0.8	±3.0	±18	Dual MC1741	601,626,632, 646,693,751
MC1458C	0.70	10	10	300	20K	1.1	0.8	±3.0	±18	Dual General Purpose	601,626,632, 646,751
MC1458N	0.5	6.0	10	200	20K	1.1	0.8	±3.0	+18	Low Noise	601,626,632, 646,693
MC1458S	0.5	6.0	10	200	20K	1.0	10	±3.0	±18	High Slew Rate	601,626,632, 646,693
MC1747C	0.5	6.0	10	200	25K	1.0	0.5	±3.0	±18	Dual MC1741	603,632,646
MC3458	0.5	10	7.0	50	20K	1.0	0.6	±1.5 +3.0	±18 +36	Split Supplies Single Supply (Low Crossover Distortion)	601,626,693
MC4558C	0.5	6.0	10	200	20K	3.0	1.5	±3.0	+18	High Frequency	601,626,693,751
MC34002	100pA	10	10	100pA	25K	4.0	13	±5.0	±18	TRIMFET Input	601,626,693,751
MC34002A	75pA	2.0	10	50pA	50K	4.0	13	±5.0	±18	TRIMFET Input	601,626,693,751
MC34002B	100pA	5.0	10	70pA	25K	4.0	13	±5.0	±18	TRIMFET Input	601,626,693,751
MC34022	150pA	2.0	5.0	70pA	25K	4.0	13	±5.0	±18	Precision TRIMFET Input	601,626,693
MC34022A	75pA	0.5	5.0	30pA	50K	4.0	13	±5.0	±18	Precision TRIMFET Input	601,626,693
MC34022B	150pA	1.0	5.0	70pA	50K	4.0	13	±5.0	±18	Precision TRIMFET Input	601,626,693
Automotive Temperature Range (-40° C to +85° C)											
MC3358	5.0	8.0	10	75	20K	1.0	0.6	±1.5 +3.0	±18 +36	Split Supplies Single Supply	626
LM2904	0.25	7.0	7.0	50	100K typ	1.0	0.6	±1.5 ±3.0	±13 ±26	Split or Single Supply OP Amp	626
Industrial Temperature Range (-25° C to +85° C)											
LM258	0.15	5.0	10	30	50K	1.0	0.6	±1.5 ±3.0	±18 ±36	Split or Single Supply OP Amp	601,626,693 751

Noncompensated

Military Temperature Range (-55° C to +125° C)											
MC1537	0.5	5.0	10	200	25K	1.0	0.25	±3.0	±18	Dual MC1709	632
Commercial Temperature Range (0° C to +70° C)											
MC1437	1.5	7.5	10	500	15K	1.0	0.25	±3.0	±18	Dual MC1709	632,646

Quad Operational Amplifiers

nternally Compensated

Device	I_{IB} µA max	V_{IO} mV max	TC_{VIO} µV/°C typ	I_{IO} nA max	A_{vol} V/V min	BW(Av=1) MHz typ	SR(Av=1) V/µs typ	Supply Voltage V min	Supply Voltage V max	Description	Packages
Military Temperature Range (-55° C to +125° C)											
LM124	0.15	5.0	7.0	30	50K	1.0	0.6	±1.5 +3.0	±16 +32	Low Power Consumption	632,646
LM148	0.10	5.0	—	25	50K	1.0	0.5	±3.0	±18	Quad MC1741	632
MC3503	0.5	5.0	7.0	50	50K	1.0	0.6	±1.5 +3.0	±18 +36	General Purpose Low Power	632,646
MC4741	0.5	5.0	15	200	50K	1.0	0.5	±3.0	±22	Quad MC1741	632,646
MC35004	100pA	10	10	100pA	25K	4.0	13	±5.0	±22	Trimmed FET Input	632
MC35004A	75pA	2.0	10	25pA	50K	4.0	13	±5.0	±22	Trimmed FET Input	632
MC35004B	100pA	5.0	10	50pA	50K	4.0	13	±5.0	±22	Trimmed FET Input	632
Commercial Temperature Range (0° C to +70° C)											
LM324	0.25	6.0	7.0	50	25K	1.0	0.6	±1.5 +3.0	±16 +32	Low Power Consumption	632,646,751A
LM348	0.20	6.0	—	50	25K	1.0	0.5	±3.0	±18	Quad MC1741	632,646,751A
MC3401	0.3	—	—	—	1K	5.0	0.6	±1.5 +3.0	±18 +36	Norton Input	632,646
MC3403	0.5	10	7.0	50	20K	1.0	0.6	±1.5 +3.0	±18 +36	No Crossover Distortion	632,646,751A
MC4741C	0.5	6.0	15	200	20K	1.0	0.5	±3.0	±18	Quad MC1741	632,646
MC34004	200pA	10	10	100pA	25K	4.0	13	±5.0	±18	Trimmed FET Input	632,646
MC34004A	100pA	2.0	10	50pA	50K	4.0	13	±5.0	±18	Trimmed FET Input	632,646
MC34004B	200pA	5.0	10	100pA	50K	4.0	13	±5.0	±18	Trimmed FET Input	632,646
TCA 3002	0.5	5.0	10	50	50K	1.0	1.0	±2.5	±18	Programmable Low Power	620,648
TCA 3003	0.5	5.0	10	50	50K	1.0	1.0	±2.5	±18	Programmable Low Power	620,648
Automotive Temperature Range (-40° C to +85° C)											
LM2902	0.5	10	—	50	—	1.0	0.6	±1.5 +3.0	±13 +26	Differential Low Power	646
MC3301	0.3	—	—	—	1K	4.0	0.6	±2.0 +4.0	±15 +28	Norton Input	646
MC3303	0.5	8.0	10	75	20K	1.0	0.6	±1.5 +3.0	±18 +36	Differential General Purpose	646
Industrial Temperature Range (-25° C to +85° C)											
LM224	0.15	5.0	7.0	30	50K	1.0	0.6	±1.5 ±3.0	±16 ±32	Split or Single Supply OP Amp	632,646, 751A
LM248	0.20	6.0	—	50	25K	1.0	0.5	±3.0	±18	Quad MC1741	632,646,751A

Package Styles

CASE	601	603	626
MATERIAL	Metal	Metal	Plastic
SUFFIX after type number	G, H	G, H	P, P1, N

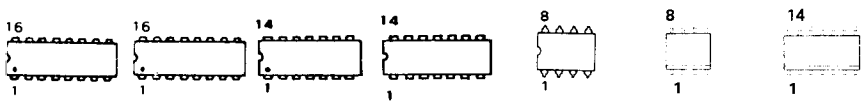

CASE	620	648	632	646	693	751	751A
MATERIAL	Ceramic	Plastic	Ceramic	Plastic	Ceramic	Plastic	Plastic
SUFFIX after type number	DC	DP	J, L	P, P2	J, U	D	D

Voltage Regulators

Fixed Output Voltage Regulators

- Low-cost monolithic circuits for positive and/or negative regulation at currents from 100 mA to 3.0 A
- Ideal for on-card regulation of subsystems
- Internal current limiting thermal shutdown and safe-area compensation

Fixed/Voltage, 3-Terminal Regulators for Positive or Negative Polarity Power Supplies.

V_{out} Volts	Tol.† Volts	I_O mA Max	Device Type Positive Output	Device Type Negative Output	V_{in} Min/Max	Reg_{line} mV	Reg_{load} mV	$\Delta V_O/\Delta T$ mV/°C Typ	Case
2	±0.1	1500	—	MC7902C	5.5/35	40	120	1.0	1, 221A
3	±0.15	100	—	MC79L03AC	4.7/30	60	72	—	29, 79
	±0.3			MC79L03C		80			
5	±0.5	100	MC78L05C	MC79L05C	6.7/30	200	60	—	29, 79
	±0.25		MC78L05AC	MC79L05AC		150			
		500	MC78M05C	—	7/35	100	100	1.0	79, 221A
	±0.4	1500	LM109	—				1.1	1, 79
			LM209	—		50			
	±0.25		LM309	—				1.0	
	±0.35		MC7805*	—	8.0/35			0.6	1
	±0.25		MC7805B#	—	8/35	100		1.0	1, 221A
			MC7805C	MC7905C	7/35				
	±0.2		MC7805A*	—	7.5/35	10	50	0.6	1
			MC7805AC	MC7905AC			100		1, 221A
	±0.25		LM140-5*	—	7/35	50	50		1
			LM340-5	—					
		3000	MC78T05*	—	7.3/35	10	25	0.1	1
			MC78T05C	—					
	±0.2		MC78T05A*	—					1, 221A
			MC78T05AC	—					1
									1, 221A
	±0.4		LM123*	—	7.5/20	5.0	25	—	1
			LM223	—					
	±0.25		LM323	—					
5.2	±0.26	1500	—	MC7905.2C	7.2/35	105	105	1.0	1, 221A
6	±0.3	500	MC78M06C	—	8/35	100	120	1.0	79, 221A
	±0.35	1500	MC7806*	—	9/35	60	100	0.7	1
	±0.3		MC7806B#	—	9/35	120	120		1,221A
			MC7806C	MC7906C	8/35				
	±0.24		MC7806A*	—	8.6/35	11	50		1
			MC7806AC	—			100		1, 221A
	±0.3		LM140-6*	—	8/35	60	60		1
			LM340-6	—					
		3000	MC78T06*	—	8.3/35	11	25	0.12	1
			MC78T06C	—					1, 221A

#T_J = −40 to +125°C
*T_J = −55 to +150°C
†Output Voltage Tolerance for Worst Case

Fixed Output Voltage Regulators (continued)

V_{out} Volts	Tol.† Volts	I_O mA Max	Device Type Positive Output	Device Type Negative Output	V_{in} Min/Max	Reg_{line} mV	Reg_{load} mV	$\Delta V_O/\Delta T$ mV/°C Typ	Case
8	±0.8	100	MC78L08C	—	9.7/30	200	80	—	29, 79
			MC78L08AC	—		175			
	±0.4	500	MC79M08C	—	10/35	100	160	1.0	79, 221A
		1500	MC7808*	—	11.5/35	80	100		1
			MC7808B#	—	11.5/35	160	160		1, 221A
			MC7808C	MC7908C	10.5/35				
	±0.3		MC7808A*	—	10.6/35	13	50		1
			MC7808AC	—			100		1, 221A
	±0.4		LM140-8*	—	10.5/35	80	80		1
			LM340-8	—					
		3000	MC78T08*	—	10.4/35	13	25	0.16	1
			MC78T08C	—					1, 221A
12	±1.2	100	MC78L12C	MC79L12C	13.7/35	250	100	—	29, 79
	±0.6		MC78L12AC	MC79L12AC					
		500	MC78M12C	—	14/35	100	240	1.0	79, 221A
		1500	MC7812*	—	15.5/35	120	120	1.5	1
			MC7812B#	—		240	240		1, 221A
			MC7812C	MC7912C	14.5/35				
	±0.5		MC7812A*	—	14.8/35	18	50		1
			MC7812AC	—			100		1, 221A
	±0.6		LM140-12*	—	14.5/35	120	120	1.5	1
			LM340-12	—					
		3000	MC78T12*	—	14.5/35	18	25	0.24	1
			MC78T12C	—					1, 221A
	±0.5		MC78T12A*	—					1
			MC78T12AC	—					1, 221A
15	±1.5	100	MC78L15C	MC78L15C	16.7/35	300	150	—	29, 79
	±0.75		MC78L15AC	MC78L15A					
		500	MC78M15C	—	17/35	100	300	1.0	79, 221A
		1500	MC7815*	—	18.5/35	150	150	1.8	1
			MC7815B#	—		300	300		1, 221A
			MC7815C	MC7915C	17.5/35				
	±0.6		MC7815A*	—	17.9/35	22	50		1
			MC7815AC	—			100		1, 221A
	±0.75		LM140-15*	—	17.5/35	150	150		1
			LM340-15	—					
		3000	MC78T15*	—	17.5/40	22	25	0.3	1
			MC78T15C	—					1, 221A
	±0.6		MC78T15A*	—					1
			MC78T15AC	—					1, 221A
18	±1.8	100	MC78L18C	MC79L18C	19.7/35	325	170	—	29, 79
	±0.9		MC78L18AC	MC79L18AC					
		500	MC78M18C	—	20/35	100	360	1.0	79, 221A
		1500	MC7818*	—	22/35	180	180	2.3	1
			MC7818B#	—		360	360		1, 221A
			MC7818C	MC7918C	21/35				
	±0.7		MC7818A*	—		31	50		1
			MC7818AC	—			100		1, 221A

#T_J = −40 to +125°C
*T_J = −55 to +150°C
†Output Voltage Tolerance for Worst Case

Fixed Output Voltage Regulators (continued)

V_{out} Volts	Tol.† Volts	I_O mA Max	Device Type Positive Output	Device Type Negative Output	V_{in} Min/Max	Reg_{line} mV	Reg_{load} mV	$\Delta V_O/\Delta T$ mV/°C Typ	Case
	±0.9		LM140-18*	—		180	180		1
			LM340-18	—					
		3000	MC78T18*	—	20.6/40	31	25	0.36	1
			MC78T18C	—					1, 221A
20	±1.0	500	MC78M20C	—	22/40	10	400	1.1	79, 221A
24	±2.4	100	MC78L24C	MC79L24C	25.7/40	350	200	—	29, 79
	±1.2		MC78L24AC	MC79L24AC		300			
		500	MC78M24C	—	26/40	100	480	1.2	79, 221A
		1500	MC7824*	—	28/40	240	240	3.0	1
			MC7824B#	—		480	480		1, 221A
			MC7824C	MC7924C	27/40				
	±1.0		MC7824A*	—	27.3/40	36	50		1
			MC7824AC	—			100		1, 221A
	±1.2		LM140-24*	—		240	240		1
			LM340-24	—					
		3000	MC78T24*		26.7/40	36	25	0.48	1
			MC78T24C						1, 221A

Adjustable Output Voltage Regulators

Positive Output Regulators

I_D mA Max	Device Type	SUFFIX	V_{out} Volts Min	V_{out} Volts Max	V_{in} Volts Min	V_{in} Volts Max	V_{in} — V_{out} Differential Volts Min	P_D Watts Max T_A = 25°C	P_D Watts Max T_C = 25°C	Regulation % V_{out} @ T_A = 25°C Typ Line	Regulation % V_{out} @ T_A = 25°C Typ Load	TC V_{out} Typ %/°C	T_J = °C Max	Case
100	LM317L	H,Z	1.2	37	5.0	40	3.0	Internally Limited		0.04	0.5	0.006	125	29, 79
	LM217L									0.02	0.3	0.004	150	
	LM117L*											0.003		
150	MC1723	CP	2.0	37	9.5	40	3.0	1.25	—	0.1	0.3	0.003	150	646
		CG						1.0	2.1	0.1		0.003		603C
		G								0.2		0.002		
		CL						1.5	—	0.1		0.003	175	632
		L							—	0.2		0.002		
		CD						1.25	—	0.1		0.003	150	751A
250	MC1469	G	2.5	32	9.0	35	3.0	0.68	1.8	0.03	0.13	0.002	150	603
	MC1569			37	8.5	40	2.7			0.015				
500	LM317M	T	1.2	37	5.0	40	3.0	Internally Limited		0.02	0.1	0.0056	125	221A
	LM317M	R												80
	LM217M											0.004	150	
	LM117M*											0.0036		
600	MC1469	R	2.5	32	9.0	35	3.0	3.0	14.0	0.03	0.05	0.002	150	614
	MC1569			37	8.5	40	2.7			0.015				

#T_J = −40 to +125°C
*T_J = −55 to +150°C
†Output Voltage Tolerance for Worst Case

Positive Output Regulators

I_O mA Max	Device Type	SUFFIX	V_{out} Volts Min	V_{out} Volts Max	V_{in} Volts Min	V_{in} Volts Max	V_{in} — V_{out} Differential Volts Min	P_D Watts Max T_A = 25°C	P_D Watts Max T_C = 25°C	Regulation % V_{out} @ T_A = 25°C Typ Line	Regulation % V_{out} @ T_A = 25°C Typ Load	TC V_{out} Typ %/°C	T_J = °C Max	Case
1500	LM317	T	1.2	37	5.0	40	3.0	Internally Limited		0.07	1.5	0.006	125	221A
	LM317	H, K												79, 1
	LM217											0.004		
	LM117*									0.05	1.0	0.003	150	
3000	LM350	T	1.2	33	5.0	36	3.0	Internally Limited		0.02	0.1	0.008	125	221A
	LM350	K												1
	LM250											0.0057	150	
	LM150*											0.0051		

*T_J - 55 to + 150 C

Negative Output Regulators

I_O mA Max	Device Type	SUFFIX	V_{out} Volts Min	V_{out} Volts Max	V_{in} Volts Min	V_{in} Volts Max	V_{in} — V_{out} Differential Volts Min	P_D Watts Max T_A = 25°C	P_D Watts Max T_C = 25°C	Regulation % V_{out} @ T_A = 25°C Typ Line	Regulation % V_{out} @ T_A = 25°C Typ Load	TC V_{out} Typ %/°C	T_J = °C Max	Case
250	MC1463	G	3.8	32	9.0	35	3.0	0.68	1.8	0.03	0.05	0.002	150	603
	MC1563		3.6	33	8.5	40	2.7			0.015	0.13			
500	**LM337M	T	−1.2	−3.7	5.0	4.0	3.0	Internally Limited		0.02	0.3	0.0048	125	221A
	**LM337M	R												80
	**LM237M											0.0034	150	
	**LM137M*											0.0031		
600	MC1463	R	3.8	34	9.0	35	3.0	2.4	9.0	0.03	0.05	0.002	175	614
	MC1563		3.6	37	8.5	40	2.7			0.015				
1500	**LM337	T	1.2	37	5.0	40	3.0	Internally Limited		0.02	0.3	0.0048	125	221A
	**LM337	H, K												79, 1
	**LM237											0.0034	150	
	**LM137*											0.0031		

*T_J 55 to + 150 C

**To be introduced

Voltage References

Output Voltage	Device Type	Voltage Tolerance	Temperature Coefficient ppm/°C	Operating Current	Dynamic Impedance Ω	Description	Case
1.235 V	**LM385	±1%	20	10μA to 20mA	1	Micro Power Voltage Reference	29
2.75V to 36V	**TL 431	±2%	50	1 to 100mA	0.22	Adjustable Precision Shunt Regulator	626,29 693

** To be introduced

Special Regulators

Floating Voltage and Current Regulators

Designed for laboratory type power supplies. Voltage is limited only by the break down voltage of associated, external, series-pass transistors.

V_{out} Volts Min	V_{out} Volts Max	I_O mA Max	Device Type	SUFFIX	V_{aux} Volts Min	V_{aux} Volts Max	P_D Watts Max	$\Delta V_{ref}/V_{ref}$ % Line	$\Delta V_{ref}/V_{ref}$ % Load	$\Delta I_L/L_L$ % Max	TC V_{out} %/°C Typ	Case
0	*	*	MC1466	L	21	30	0.75	0.015	0.015	0.2	0.001	632
			MC1566	L	20	35		0.004	0.004	0.1	0.006	

*Dependent on characteristics of external series-pass elements.

Dual ±15 V Tracking Regulators

Internally, the device is set for ±15 V, but an external adjustment can change both outputs simultaneously, from 8.0 V to 20 V.

V_{out} Volts Min	V_{out} Volts Max	I_O mA Max	V_{in} Volts Min	V_{in} Volts Max	Device Type	SUFFIX	P_D Watts Max	Reg_{line} mV	Reg_{load} mV	TC %/°C (T_{low} to T_{high}) Typ	T_A °C	Case
14.8	15.2	±100	17	30	MC1468	G	0.8	10	10	3.0	0 to +75	603C
						L	1.0					632
						R	2.4					614
					MC1568	G	0.8				−55 to +125	603C
						L	1.0					632
						R	2.4					614

Low Temperature Drift, Low Voltage Reference

V_{out} Volts Typ	I_O mA Max	$\Delta V_{out}/\Delta T$ ppm/°C Max	Device Number	Reg_{line} mV Max	Reg_{load} mV Max	T_A °C	Case
2.5 ± 5.0 mV	±10	25	MC1400U2	3.0	10	0 to +70	693
		10	MC1400AU2	(Note 1)	(Note 4)		
		40	MC1500U2			−55 to +125	
		10	MC1500AU2				
2.5 ± 25 mV	10	40	MC1403	3.0/4.5	10	0 to +70	693, 79
		25	MC1403A	(Note 2)	(Note 5)		
		55	MC1503			−55 to +125	
		25	MC1503A				
5.0 ± 10 mV	±10	25	MC1400U5	4.0	20	0 to +70	693
		10	MC1400AU5	(Note 1)	(Note 4)		
		40	MC1500U5			−55 to +125	
		10	MC1500AU5				
5.0 ± 50 mV	10	40	MC1404U5	6.0	10	0 to +70	
		25	MC1404AU5	(Note 3)	(Note 5)		
		55	MC1504U5			−55 to +125	
		25	MC1504AU5				

Notes:
1. $(V_{out} \pm |V|) \leq V_{in} \leq 40$ V
2. $4.5\ V \leq V_{in} \leq 15$ V
   $15\ V \leq V_{in} \leq 40$ V
3. $(V_{out} + 2.5\ V) \leq V_{in} \leq 40$ V
4. $-10\ mA \leq I_L \leq +10\ mA$
5. $0\ mA \leq I_L \leq 10\ mA$

Special Regulators (continued)

V_{out} Volts Typ	I_O mA Max	$\Delta V_{out}/\Delta T$ ppm/°C Max	Device Number	Reg_{line} mV Max	Reg_{load} mV Max	T_A °C	Case
6.25 ± 10 mV	±10	25	MC1400U6	4.0 (Note 1)	20 (Note 4)	0 to +70	693
		10	MC1400AU6				
		40	MC1500U6			−55 to +125	
		10	MC1500AU6				
6.25 ± 60 mV	10	40	MC1404U6	6.0 (Note 3)	10 (Note 5)	0 to +70	
		25	MC1404AU6				
		55	MC1504U6			−55 to +125	
		25	MC1504AU6				
10 ± 20 mV	±10	25	MC1400U10	4.0 (Note 1)	20 (Note 4)	0 to +70	
		10	MC1400AU10				
		40	MC1500U10			−55 to +125	
		10	MC1500AU10				
10 ± 100 mV	10	40	MC1404U10	6.0 (Note 3)	10 (Note 5)	0 to +70	
		25	MC1404AU10				
		55	MC1504U10			55 to +125	
		25	MC1504AU10				

Notes:
1. $(V_{out} \pm |V|) \leq V_{in} \leq 40$ V
2. $4.5\ V \leq V_{in} \leq 15$ V
   $15\ V \leq V_{in} \leq 40$ V
3. $(V_{out} + 2.5\ V) \leq V_{in} \leq 40$ V
4. $-10\ mA \leq I_L \leq +10\ mA$
5. $0\ mA \leq I_L \leq 10\ mA$

Package Styles

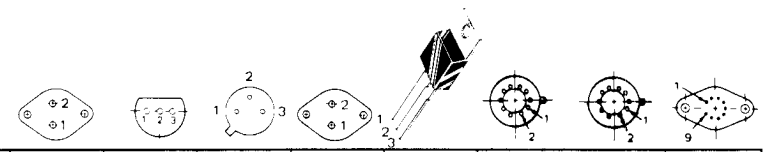

CASE	1 (TO-3)	29 (TO-92)	79 (TO-39)	80 (TO-66)	221A (TO-220)	603 (TO-5 Type)	603C (TO-5 Type)	614 (TO-66)
MATERIAL	Metal	Plastic	Metal	Metal	Plastic	Metal	Metal	Metal
SUFFIX	SK, K, KC	P, Z	G, H	R	T	G, H	G	R

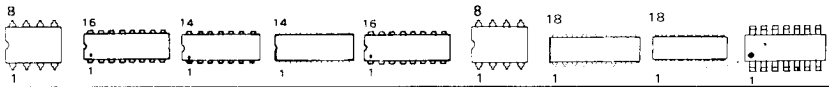

CASE	626	620	632 (TO-116)	646	648	693	701	726	751A
MATERIAL	Plastic	Ceramic	Ceramic	Plastic	Plastic	Ceramic	Ceramic	Plastic	Plastic
SUFFIX	P	J, L	L	P or P2	N, P	U	J	N	C, D

Integrated Circuits for Power Supplies

(Pulse Width Modulation Control IC)

I_O mA Max	V_{CC} (V) Min	V_{CC} (V) Max	f_O (KHz) Min	f_O (KHz) Max	Device Number	Suffix	Temperature Range T_A (°C)	Case
40	10	30	2.0	100	MC3420	P	0 to +70	648
						L		620
					MC3520	L	–55 to +125	620
200	7	40	1.0	200	MC34060	P	0 to +70	646
						L		632
					MC35060	L	–55 to +125	632
	8	35	0.1	500	SG1525A, 27A	J	–55 to +125	620
					SG2525A, 27A		–25 to +85	
					SG3525A, 27A		0 to +70	
	8	35	0.001	400	SG1526	J	–55 to +125	726
					SG2526		–25 to +85	
					SG3526		0 to +70	
250	7	40	1.0	300	TL494	CN	0 to +70	648
500*						CJ		620
						MJ	–55 to +125	620
		>40#			TL495	CN	0 to +70	701
						CJ		726
						MJ	–55 to +125	726
1500	2.5	40	Typ 8		μA78S40	DM	–55 to +125	620
						DC	0 to +70	620
						PC		648
	8	20	20	70	TDA4600	–	0 to +70	SIP 9

* in single ended configuration
\# TL495 features a 39V Zener for high voltage operation

MC3423 Typical Application

MC3523U (T_A = −55 to + 125°C)

MC3423P,U (T_A = 0 to + 70°C)

Packages: P Suffix, Case 626 (Plastic)
U Suffix, Case 693 (Ceramic)

This device can protect sensitive circuitry from power supply transients or regulator failure when used with an external "Crowbar" SCR. The device senses voltage and compares it to an internal 2.6 V reference. Overvoltage trip is adjustable by means of an external resistive voltage divider. A minimum duration before trip is programmable with an external capacitor. Other features include a 300 mA high current output for driving the gate of a "Crowbar" SCR, an open-collector indicator output and remote activation capability.

Over Voltage Protection Circuit

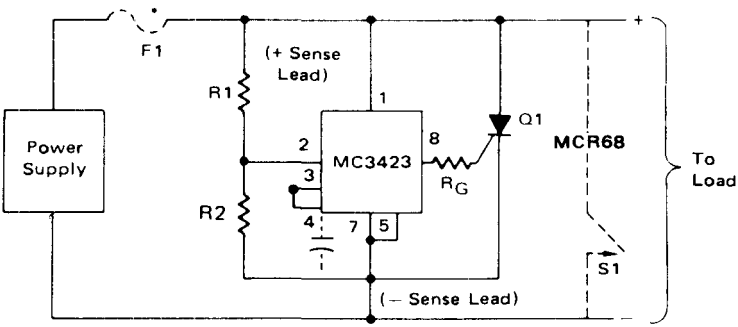

$$V_{trip} = V_{ref}\left(1+\frac{R1}{R2}\right) \approx 2.6\ V\left(1+\frac{R1}{R2}\right)$$

$R2 \leq 10\ k\Omega$ for minimum drift

Dual Channel Supervisory Circuit (OUVP)

MC3524L T_A = −55°C to + 125°C)

MC3424L,P (T_A = 0 to 70°C)

Packages: P Suffix, Case 648 (Plastic)
L Suffix, Case 620 (Ceramic)

This circuit consists of uncommitted differential inputs, an internal reference, and high current outputs. The two differential input channels and the pinned-out reference permit monitoring for over- and under-voltage faults. Three hundred mA of output current for each channel provides sufficient gate drive for "Crowbar" SCR's and 30 mA are available to drive indicator devices. Other features include, programmable hysteresis, activation delay, and remote activation.

Positive and Negative Power Supply OVP

MC3424 Typical Application

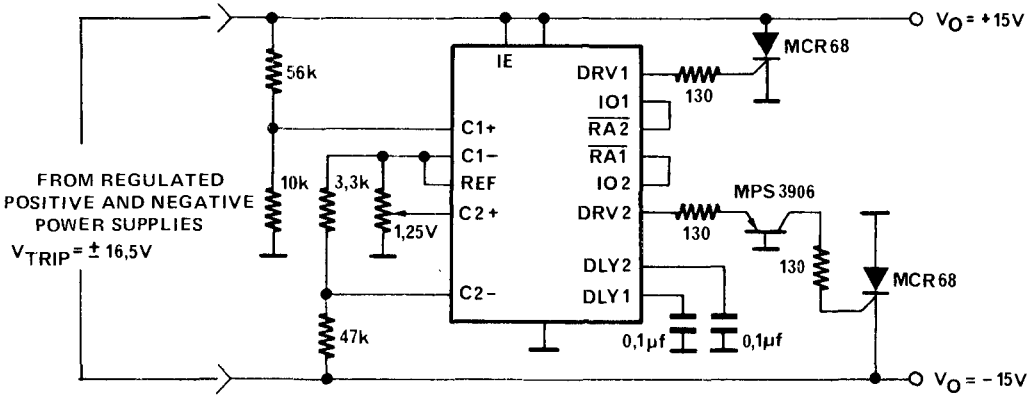

Over Under Voltage Protection Circuit

MC3525U ($T_A = -55°C$ to $+125°C$)

MC3425U,P ($T_A = 0$ to $+70°C$)

Packages: P Suffix, Case 626 (Plastic)
U Suffix, Case 693 (Ceramic)

This device is a low cost version of the MC3424. It has been designed to protect circuitry from overvoltage transients or regulator failures with an overvoltage drive output capable of sourcing 300 mA at a slew-rate of 2A/µs for triggering a "Crowbar" SCR. It can also prevent from an undervoltage fault by driving an indicator device with a 30 mA current sink. Other features include programmable hysteresis, activation delay.

MC3425 Typical Application

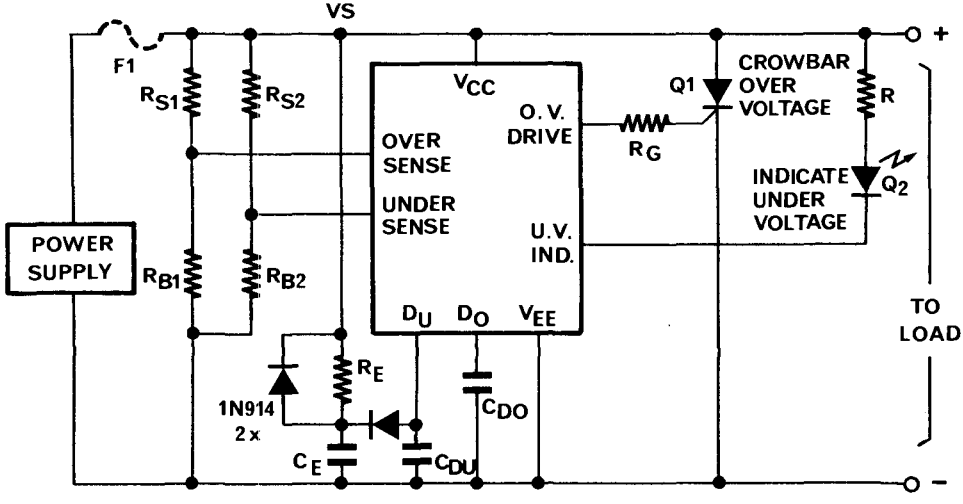

$$TRIP = V_{REF}\left(1 + \frac{R_S}{R_B}\right) = 2{,}5V\left(1 + \frac{R_S}{R_B}\right)$$

R_B=10k FOR MINIMUM DRIFT

High Frequency Amplifiers

A variety of high-frequency circuits with features ranging from low-cost simplicity to multi-function versatility marks Motorola's line of integrated RF/IF amplifiers. Devices described here are intended for industrial and communications applications.

AGC Amplifiers

MC1545/MC1445 – Gated 2-Channel Input

Differential input and output amplifier with gated 2-channel input for a wide variety of switching purposes. Typical 75 MHz bandwidth makes it suitable for high-frequency applications such as video switching, FSK circuits, multiplexers, etc. Gating circuit is useful for AGC control. See Application Notes AN-475 and AN-491 for design details.

GATE CHARACTERISTICS

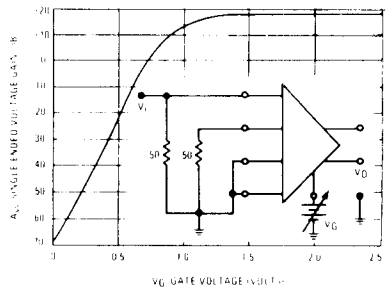

MC1590 – Wide-Band General Purpose

Has differential inputs and outputs with unneutralized power gain as high as 35 dB typical at 100 MHz in tuned amplifier serivce. Effective AGC voltage range from 5 to 7 volts for a 30 dB gain reduction. See Application Note AN-513 for design details.

UNNEUTRALIZED POWER GAIN versus FREQUENCY (Tuned Amplifier)

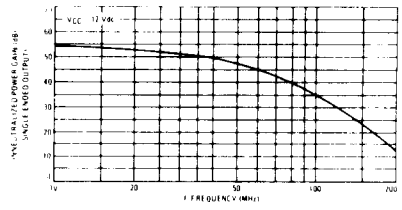

AGC AMPLIFIERS ELECTRICAL SPECIFICATIONS

Operating Temperature Range		A_V	Bandwidth	V_{CC}/V_{EE}		
−55 to +125 °C	0 to +75 °C	dB	MHz	Vdc	Case	Special Features
MC1590	—	44 Typ @ 4 Typ @	10 100	+12/-	601	Characterized as Video Amplifier and as High Frequency Tuned Amplifier
MC1545	MC1445	19 Typ @	75	+5/−5	602A, 632	Gate Controlled 2-Channel Input

Non-AGC Amplifiers

MC1733/MC1733C – Utility Amplifier

Differential input and output amplifier provides three fixed gain options with bandwidth to 120 MHz. External resistor permits any gain setting from 10 to 400 V/V. Extremely fast rise time (2.5 ns typ) and propagation delay time (3.6 ns typ) makes this unit particularly useful as pulse amplifier in tape, drum, or disc memory read applications.

GAIN versus FREQUENCY

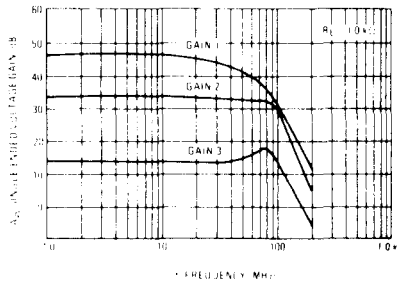

SE/NE592 – Differential two stage video amplifiers. A monolythic, two state differential output, wideband video amplifier. It offers fixed gain of 100 and 400 without external components and adjustable gains from 400 to 0 with one external resistor. The input stage has been designed so that with the addition of a few external reactive elements between the gain select terminals, the circuit can function as a high pass, low pass or band pass filter. This feature makes the circuit ideal for use as a video or pulse amplifier in communications, magnetics memories, display and video recorder systems.

Operating Temperature Range		A_V		Bandwidth	V_{CC}/V_{EE}		
−55 to +125 °C	0 to +75 °C	dB		MHz	Vdc	Case	Special Features
MC1733	MC1733C	52	@	40	+6/−6	603, 632 646	3-Fixed Gain Options. Fast Rise Time and Propagation
		40		90			
		20		120			
SE592	NE592	55	@	40	+6/−6	603, 632	120 MHz bandwith pin compatible with the MC1733
		45	@	90			

Package Styles

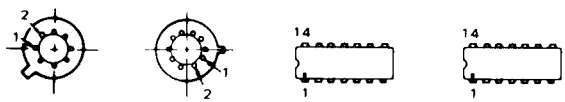

CASE	601	603	632	646
MATERIAL	Metal	Metal	Ceramic	Plastic
SUFFIX after type number	G	G	L	N, P

Special Purpose Circuits

The linear-integrated-circuits listed in this section were developed by Motorola for the system design engineer to fill special-purpose requirements as indicated by the subheadings. Temperature ranges and package availability are also tailored to provide versatility.

Linear Four-Quadrant Multipliers

Description	Linearity Error Typ.	Input Voltage Range Vdc min.	Case	Type −55 to +125 °C	Type 0 to +70 °C
The MC1594/MC1494 is a Variable Transconductance Multiplier with internal level-shift circuitry and voltage regulator. Scale factor, input offsets and output offset are completely adjustable with the use of four external potentiometers. Two complementary regulated voltages are provided to simplify offset adjustment and improve power-supply rejection. This device is designed for use where the output voltage is a linear product of two input voltages. Typical applications include: multiply, divide, square root, mean square, phase detector, frequency doubler, balanced moculator/demodulator, electronic gain control.	±0.3%	±10	620	MC1594	
	±0.5%	±10	620		MC1494
The MC1595L/1495L is similar to the above, but without internal level shift and voltage regulator circuits.	X Input = 0.5% Y Input = 1.0%	±10	632	MC1595	
	X Input = 1.0% Y Input = 2.0%	±10	632		MC1495

BALANCED MODULATOR/DEMODULATOR

Description	Carrier Suppression dB @ f Typ.	Carrier Suppression dB @ f MHz	Common Mode Rejection dB Typ.	Case	Type −55 to +125 °C	Type 0 to +75 °C
Designed for use where the output voltage is a product of an input voltage (signal) and a switching function (carrier). Typical applications include suppressed carrier and amplitude modulation, synchronous detection, FM detection, phase detection and chopper application.	65	0.5	85	603, 632	MC1596	
	50	10		603, 632, 646		MC1496

LOW-FREQUENCY CIRCUITS

Function	Output Power W Typ.	Voltage Gain – Typ. V/V Typ.	Total Harmonic Distortion % Typ.	Case	Type −55 to +125 °C	Type 0 to +70 °C
A power amplifier device capable of single or split supply operation.	1.0	10, 18, 36	0.4	603B	MC1554	MC1454

TIMING CIRCUITS

These devices are highly stable timing circuits capable of producing accurate time delays or oscillation. Additional terminals are provided for triggering or resetting if desired. In the time delay mode of operation, the time is precisely controlled by one external resistor and capacitor. For a stable operation as an oscillator, the free running frequency and the duty cycle are both accurately controlled with two external resistors and one capacitor. The circuit may be triggered and reset on falling waveforms, and the output structure can source or sink up to 200 mA or drive MTTL circuits. Timing from Microseconds through Hours.

Description	Supply Voltage V_{CC} Vdc – Max.	Initial Timing Error V_{CC} = 5 & 15 V C = 0.1 μF % Typ.	V_{OL} V_{CC} = 15 V I_{sink} = 50 mA Vdc – Max.	V_{OL} V_{CC} = 15 V I_{source} = 100 mA Vdc – Min.	Case	Type –55 to +125 °C	Type 0 to +70°C
Wide range adjustable timers	16	1.0	0.75	12.75	601, 626, 693		MC1455
	18	0.5	0.5	13	601, 693	MC1555	
Dual Adjustable Timers	16	2.25	0.75	12.75	632, 646		MC3456
	18	1.5	0.5	13	632	MC3556	
Adjustable Timer with externally adjustable threshold level	16	1.0	1.0	12.75	626		MC1422

POWER CIRCUITS

Despription	Temperature	Case	Type
Power Amplifier capable of ±300 mA driving	–55 to +125 °C	614	MC1538R
Typical Current gain of 3000	0 to +70°C	614	MC1438R

MC3505/3405 – Monolithic Dual Op Amp and Dual Comparator

This device contains two differential input operational amplifiers and two comparators each set capable of single supply operation. This op amp, comp circuit will find its applications as a general purpose product for automotive circuits and as an industrial building block.

- op amp equivalent in performance to MC3403
- comparator similar in performance to MLM339
- op amps are internaly frequency compensated
- supply operation 3.0 V to 36 Volts
- dual supply operation also available.

PIN CONNECTIONS

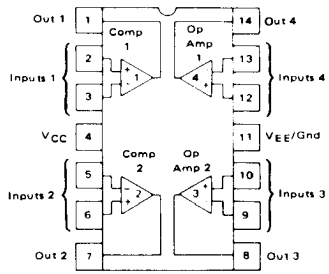

MC3505 L (–55 °C to +125 °C) Case 632
MC3405 L (0 °C to +70 °C) Case 632
MC3405 P (0 °C to +70 °C) Case 646

Chapter 7

Linear Interface Circuits

To a significant degree, the economics of semiconductors prohibits the tailoring of integrated circuits — even MSI and LSI components — to a specifically designated end-product. While specific logic families are engineered to work together harmoniously, it is often advantageous to mix functions from a number of families in order to derive performance or economic benefits. And, often, such conglomerates require matching, level translation or driver enhancement.

Even within a single family, interfacing in terms of fan-out enhancement or power boosting is often required.

Motorola's broad line of products, encompassing all popular device families and technologies has spawned a large and continuously expanding repertoire of interface circuits to meet the needs of the system designer.

Table of Contents

	Page
Bus Interface	7- 2
Memory Interface and Control	7- 9
Line Drivers and Receivers for Computer/Terminal Applications	7-15
Peripheral Interface	7-19
Numeric Display Interface	7-21
Precision Circuits — Data Conversion	7-22
Voltage References	7-27
Voltage Comparators	7-28

Bus Interface

Microprocessor Bus

This family of devices is designed to extend the limited drive capabilities of today's standard 6800 and 8080 type NMOS microprocessors. All devices are fabricated with Schottky TTL technology for high speed.

General features include:

- Single +5.0 V Power Supply Requirement
- Three-State Logic Output
- Low Input Loading – 200 μA Max.

DATA BUS EXTENDERS

Quad, Bidirectional, with 3-State Outputs

***MC6880A/MC8T26A #** – Inverting

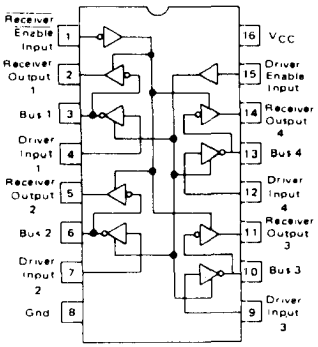

#These devices may be ordered by either of the paired numbers.

Both types:
T_A = 0 to 70°C

Packages:
L Suffix – Case 620
P Suffix – Case 648

***MC6889/MC8T28#** – Non-inverting

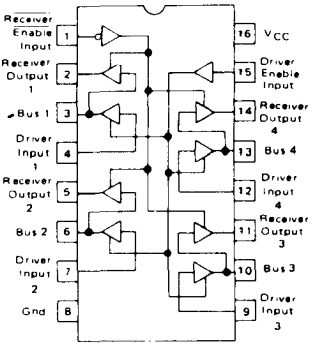

Device Number	Input Current I_{IH} μA Max	Input Current I_{IL} μA Max	I_{OHL} Output Disabled Leakage Current – High Logic State μA Max	t_{PLH}, t_{PHL} Propagation Delay Time – High to Low or Low to High ns Max
MC6880A/MC8T26A	25	-200	100	14
MC6889/MC8T28	25	-200	100	17

* Extended Temperature range with CL Suffix (T_A = -40° C to 85° C), MTL Suffix (T_A = -55° C to 125° C) } Available

A-D/D-A CONVERTERS

(See Precision Circuits — Data Conversion)

MPU Bus Compatible
MC6890/MC6890A* – Split Supply
MC6891/MC6891A* – Single Supply
* To be introduced.

M6800 CLOCK GENERATOR

MC6875/MC6875A— Provides the non-overlapping two-phase clock signals for M6800 MPU systems.

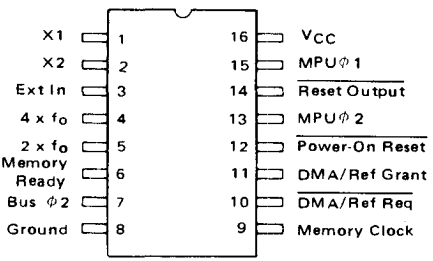

MC6875L — T_A = 0 to +70°C
MC6875AL — T_A = -55 to +125°C

Package:
L Suffix — Case 620

MICROPROCESSOR BUS (continued)

ADDRESS AND CONTROL BUS EXTENDERS

Octal, Buffer/Latch Unidirectional with 3-State Outputs

MC6882A/MC3482A # – Inverting

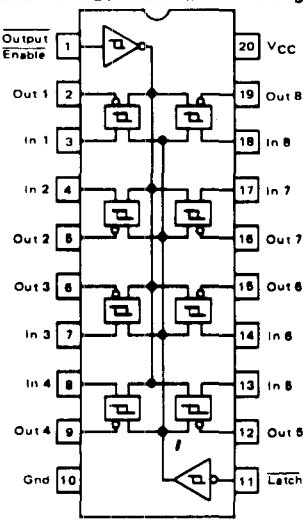

Output Enable	Latch	Input	Output
0	1	0	1
0	1	1	0
0	0	X	Q_0
1	X	X	Z

#These devices may be ordered by either of the paired numbers.

All types:
T_A = 0 to 75°C

Packages:
L Suffix – Case 732

MC6882B/MC3482B # – Non-inverting

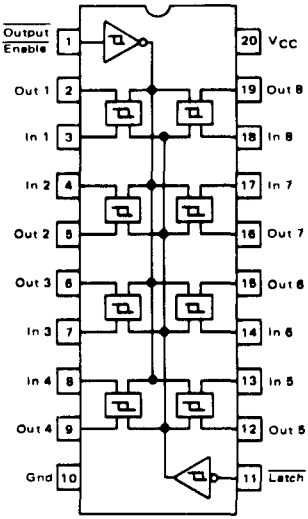

Output Enable	Latch	Input	Output
0	1	0	0
0	1	1	1
0	0	X	Q_0
1	X	X	Z

Device Number	V_{OL} @ I_{OL} = 48 mA Volts Max	V_{OH} @ I_{OH} = -5.2 mA Volts Min	I_{OS} mA Typ	t_{PHL} ns Typ
MC6882A/MC3482A	0.5	2.4	-80	8.0
MC6882B/MC3482B	0.5	2.4	-80	10

Hex, Unidirectional, with 3-State Outputs

MC6885/MC8T95 # – Non-inverting
***MC6886/MC8T96 # – Inverting**
Two-input Enable controls all six buffers.

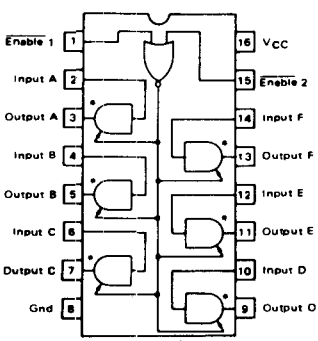

*Add inverter for MC6886/MC8T96.

These devices may be ordered by either of the paired numbers

All four types:
T_A = 0 to 75°C

Packages:
L Suffix – Case 620
P Suffix – Case 648

MC6887/MC8T97# – Non-inverting
***MC6888/MC8T98# – Inverting**
Two Enable inputs, one controlling four buffers and the other controlling the remaining two buffers.

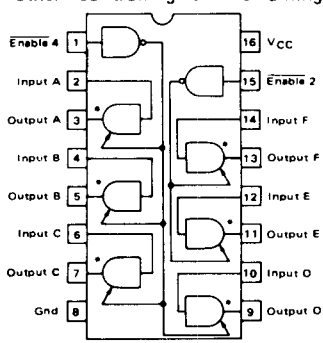

*Add inverter for MC6888/MC8T98.

V_{OL} @ I_{OL} = 48 mA Volts Max	V_{OH} @ I_{OH} = -5.2 mA Volts Min	I_{OS} mA Typ	t_{PLH} ns Typ	$t_{P(Enable)}$ ns Typ
0.5	2.4	-80	6.0	11

* Extended Temperature range with CL Suffix (T_A = -40° C to 85° C) } Available
Contact factory MTL Suffix (T_A = -55° C to 125° C) }

Minicomputer Bus

Transceivers and receivers for bus organized minicomputers employing 120-ohm terminated lines.

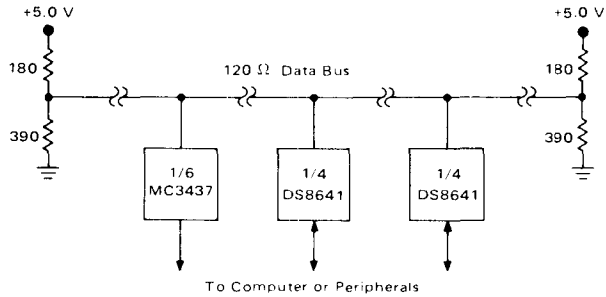

All three devices:
T_A = 0 to 70°C

Packages:

MC3437
MC3438 DS8641
L Suffix – Case 620 – J Suffix
P Suffix – Case 648 – N Suffix

HEX RECEIVERS

MC3437 – Hysteresis-equipped for improved noise immunity. DS8837 equivalent.

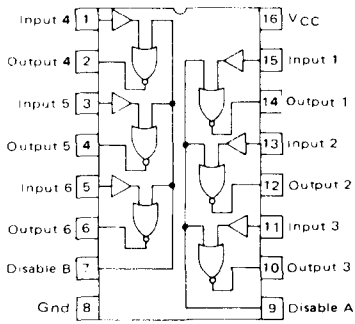

$I_{I(R)}$ @ $V_{I(R)}$ = 4.0 V μA Max	Hysteresis Volts Min	$t_{PLH(R)}$ @ C_L = 15 pF ns Max
50	0.5	30

QUAD TRANSCEIVERS

DS8641-MC3438

Open collector driver outputs allow wire-OR connection. MC3438 has hysteresis-equipped receiver for improved noise immunity (not available with DS8641). MC3438 is equivalent to the DS8838.

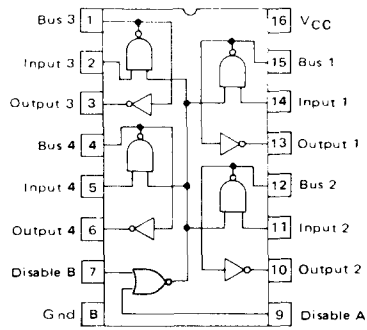

Receiver Hysteresis Volts Min	$V_{L(BUS)}$ @ I_{BUS} = 50 mA Volts Max	I_{BUS} @ $V_{IH(BUS)}$ = 4.0 V μA Max	$t_{PLH(D)}$ @ C_L = 15 pF ns Max	$t_{PLH(R)}$ @ C_L = 15 pF ns Max
0.25*	0.7	100	25	30

*MC3438 only.

Computer Bus

NEW IBM 360/370 I/O INTERFACE

Line Receivers and Drivers designed to operate compatibly. The MC75125/MC75127 Seven-Channel Receivers, MC75128/MC75129 Eight-Channel Receivers, and the MC3481/MC3485 Drivers meet the new IBM System 360/370 I/O standard requirements.

SEVEN-CHANNEL LINE RECEIVERS

MC75125

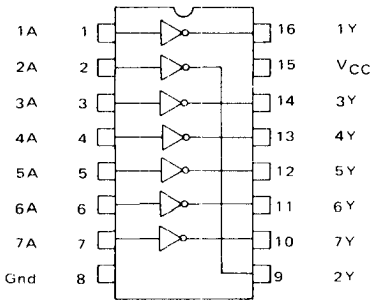

Logic: Y = A

All types:
T_A = 0 to 70°C

Packages:
L Suffix – Case 620
P Suffix – Case 648

MC75127– Standard V_{CC} and Ground Pinouts.

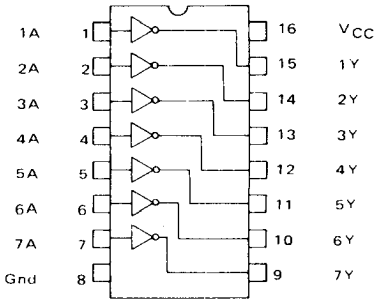

Logic: Y = A

EIGHT-CHANNEL LINE RECEIVERS
(To be introduced)

MC75128– Active-High Strobe

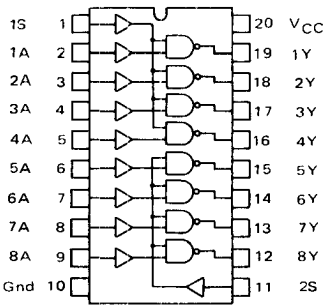

Packages:
L Suffix – Case 732
P Suffix – Case 738

positive logic: Y = AS

MC75129– Active-Low Strobe

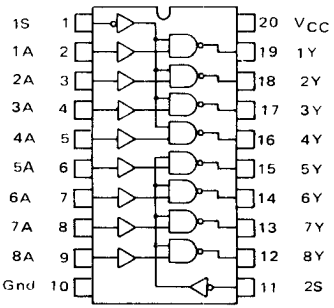

Device Number	Input Resistance kΩ Min/Max	$I_{IH(R)}$ @ V_{IH} = 3.11 V mA Max	t_{PLH} @ C_L = 50 pF ns Max
MC75125/75127	7.4/20	0.42	25
MC75128/75129	7.4/20	0.42	25

New IBM 360/370 I/O Interface (continued)

QUAD LINE DRIVERS

MC3481 – Open emitter driver with individual fault flags.

MC3485 – Open emitter driver with combined open collector fault flag and inverted outputs.

Both types:
T_A = 0 to 70°C

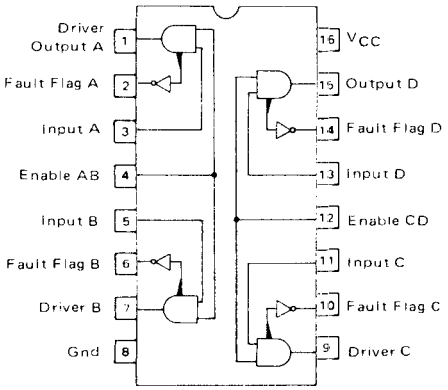

Packages:
L Suffix – Case 620
P Suffix – Case 648

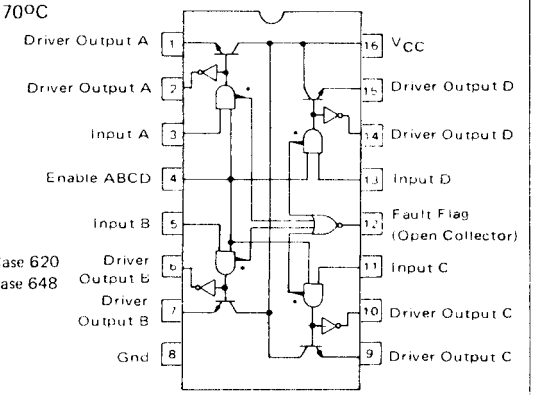

Device Number	V_{OH} @ I_{OH} = -59.3 mA Volts Max	I_{OS}* @ V_O = 0 mA Max	t_{PLH} @ C_L = 100 pF ns Typ
MC3481/3485	3.11	0.0	25

*Fault Protection

GENERAL-PURPOSE I/O INTERFACE

Line drivers and receivers designed to operate compatibly. The MC8T13/MC8T14 combination is specified for general TTL system applications. The MC8T23/MC8T24 combination is oriented toward older IBM 360/370 system requirements.

DUAL LINE DRIVERS

MC8T13 – Open emitter driver; specified for general TTL systems.
MC8T23 – Open emitter driver; specified to meet older IBM system requirements.

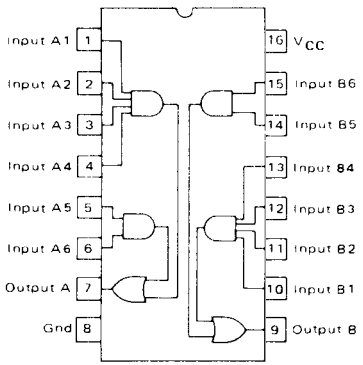

All four devices:
T_A = 0 to 75°C

Packages:
L Suffix – Case 620
P Suffix – Case 648

TRIPLE LINE RECEIVERS

MC8T14 – Hysteresis-equipped receiver; specified for general TTL systems.
MC8T24 – Hysteresis-equipped receiver; specified to meet older IBM system requirements.

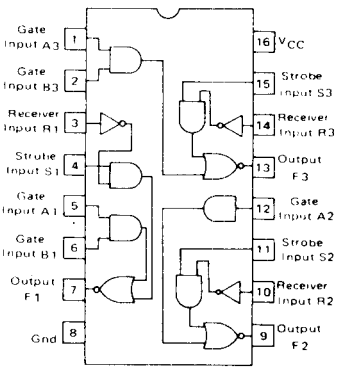

Device Number	V_{OH} @ I_{OH} = -75 mA @ I_{OH} = -59.3 mA* Volts Max	I_{OS} @ V_O = 0 mA Max	t_{PLH} @ C_L = 15 pF ns Max
MC8T13	2.4	30	20
MC8T23	3.11*	-30	20

Device Number	$V_{H(R)}$ Volts Min	$I_{IH(R)}$ @ $V_{IH(R)}$ = 3.8 V @ $V_{IH(R)}$ = 3.11 V* mA Max	$t_{PLH(R)}$ @ C_L = 15 pF ns Max
MC8T14	0.3	0.17	30
MC8T24	0.2	0.17*	30

General Purpose Interface Bus

These devices are designed to meet the GPIB busspecification of IEEE Standard 488-1978, for the interconnection of Measurement Apparatus.

QUAD INTERFACE TRANSCEIVERS

MC3440AP – Three drivers with common Enable input; one driver without Enable.

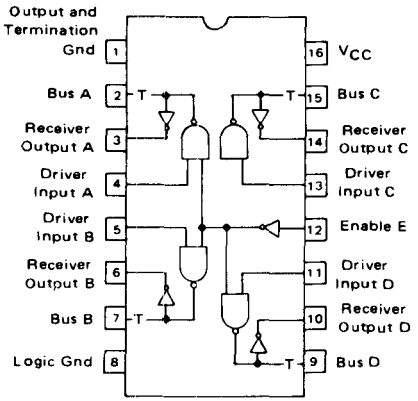

MC3441AP – Four drivers with common Enable input.

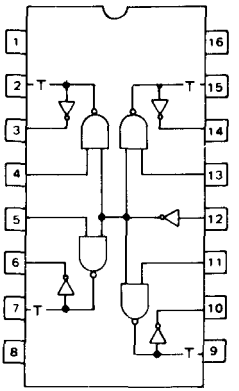

MC3443P – Four drivers with common Enable input; no termination resistors.

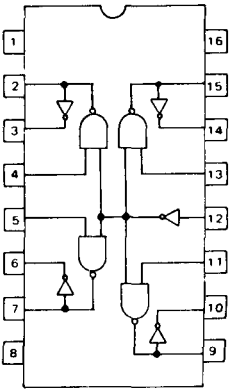

MC3446AP – For low-power instruments, including MOS.

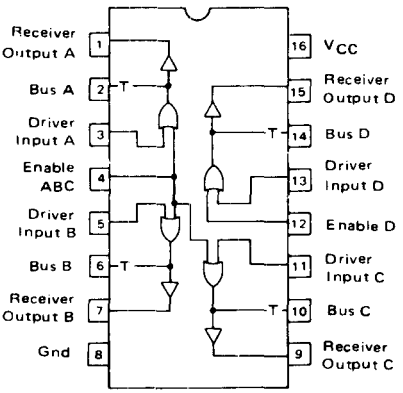

Packages:
L Suffix – Case 620
P Suffix – Case 648

All types:
T_A = 0 to 70°C

MC3448A – For common Send-Receive bus; bidirectional.

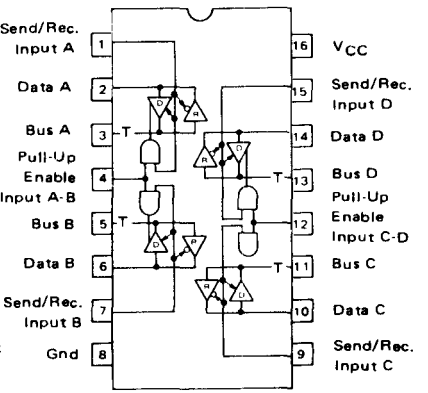

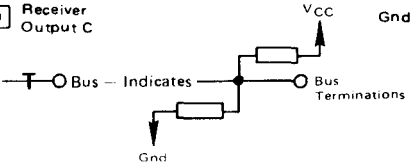

Device Number	Receiver Input Hysteresis mV Min	Drive Output Voltage I_{OL} · 48 mA Volts Max	Bus Divider Voltage Volts	t_{PHL} (Driver or Receiver) ns Max
MC3440AP	400	0.4	2.6 to 3.75	30
MC3441AP	400	0.4	2.6 to 3.75	30
MC3443P	400	0.4	–	25(D) 22(R)
MC3446AP	400	0.4	2.5 to 3.7	50
MC3448A	400	0.4	2.5 to 3.7	35

Instrumentation Bus (continued)

OCTAL LOW-POWER INTERFACE TRANSCEIVER

These devices are designed to meet the GPIB bus specifications of IEEE Standard 488-1978, for the interconnection of Measurement Apparatus.

MC3447 – Open collector, 3-State outputs with terminations.

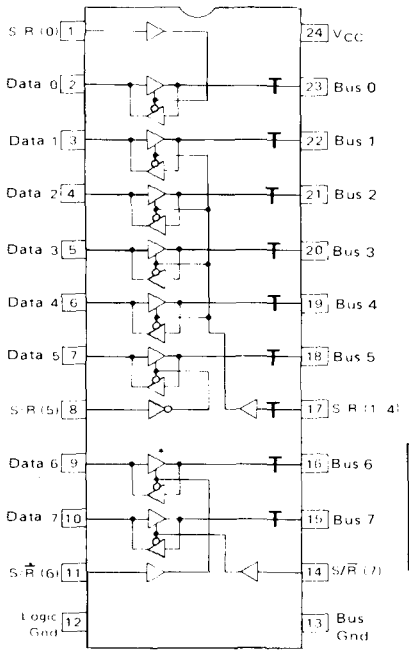

All types:
T_A = 0 to 70°C

Packages:
L Suffix – Case 623
P Suffix – Case 649

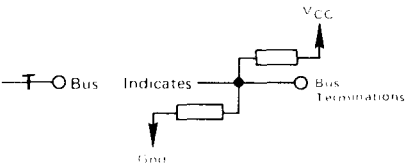

Device Number	Receiver Input Hysteresis mV Min	Drive Output Voltage @ I_{OL} = 48 mA; Volts Max	t_{PHL} (Driver or Receiver) ns Max
MC3447	400	0.5	30 (D) 22 (R)*

*Fast Channel.

HIGH-CURRENT PARTY-LINE BUS TRANSCEIVERS

Devices for industrial control and data communication.

MC26S10 – Inverting
MC26S11 – Non-inverting
Quad transceivers with open-collector drivers and PNP-buffered inputs for MOS compatibility.

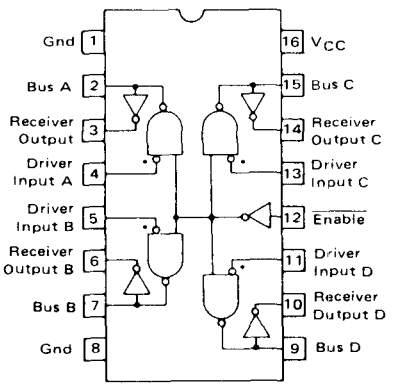

*Inverter on MC26S11 only.

Packages:
L Suffix – Case 620
P Suffix – Case 648

Test	Condition	Limits
V_{OL} (D)	I_{OL} = 100 mA	0.8 Volts Max
I_O (D)	V_{OH} = 4.5 V	100 μA Max
I_{O1} (D)	V_{CC} = 0 V, V_{OH} = 4.5 V	100 μA Max
I_{IH} (D)	V_{IH} = 2.7 V	30 μA Max
I_{IL} (D)	V_{IL} = 0.4 V	-0.54 mA Max
t_P (D)	MC26S10 MC26S11	15 ns Max 19 ns Max
t_P (R)	Both Types	15 ns Max

NMOS Memories to TTL Systems

MULTIPLEXED 16-PIN RAM CONTROL
(For 4K, 16K, and 64K Dynamic Memories)

MC3480 – Memory Controller. Used with all three levels of RAM.

The memory controller chip is designed to greatly simplify the interface logic required to control popular 16-pin 4K, 16K, or 64K dynamic NMOS RAMs in a microprocessor system such as the M6800. The controller will generate, on command from the microprocessor, the proper $\overline{RAS}$ and timing signals required to successfully transfer data between the microprocessor and the NMOS memories. The controller, in conjunction with an oscillator, will also generate the necessary signals required to ensure that the dynamic memories are refreshed for the retention of data.

With Schottky TTL technology for high performance, and high input impedance for minimum loading of the MPU bus, the MC3480 reduces package count, and reduces system access/cycle times by 30%. The chip enable allows expansion to larger-word capacity.

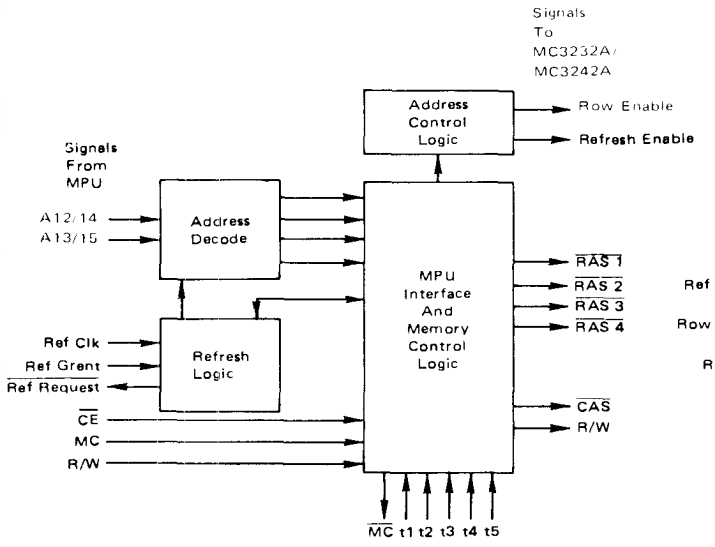

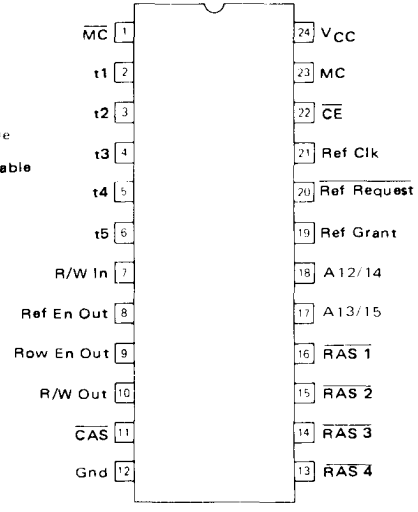

T_A = 0 to 70°C

Packages:
L Suffix – Case 623
P Suffix – Case 649

Designed to interface directly with MC3232A or MC3242A address/multiplexers/refresh counters.

NMOS Memories to TTL Systems (continued)

MC3232A – 6-Bit (4K RAM) Address Multiplexer/Refresh Counter
MC3242A – 7-Bit (16K RAM) Address Multiplexer/Refresh Counter
MC3482A/B – 8-Bit Address Multiplexer (See Microprocessor Bus Section)

MC3232A – Designed for multiplexing 12 address lines into 6 for the 16-pin multiplexed 4K RAMs, while also containing a 6-bit refresh counter.

MC3242A – Designed for multiplexing 14 address lines into 7 for the 16-pin multiplexed 16K RAMs, while also containing a 7-bit refresh counter.

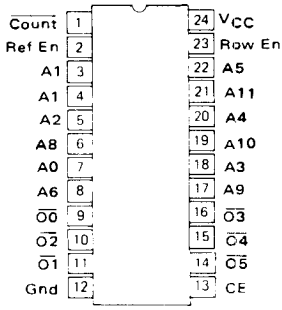

Both types:
T_A = 0 to 75°C

Packages:
MC3232A – L Suffix – Case 623
P Suffix – Case 649

MC3242A – L Suffix – Case 733
P Suffix – Case 710

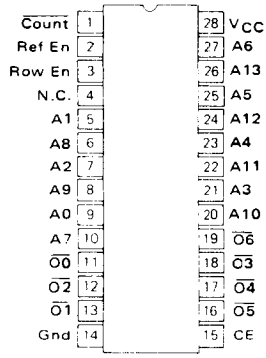

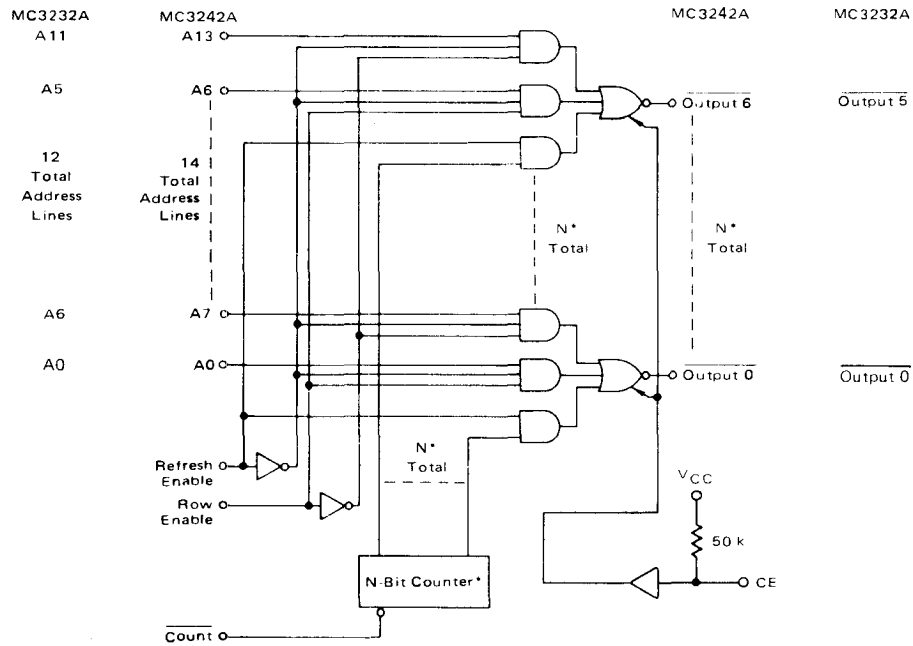

*N = 6-Bit for MC3232A
= 7-Bit for MC3242A

NMOS Memories to TTL Systems (continued)

Data and Address Line Drivers (Low Level) (continued)

TYPICAL APPLICATION

16K X 8-BIT MEMORY SYSTEM FOR M6800 MPU

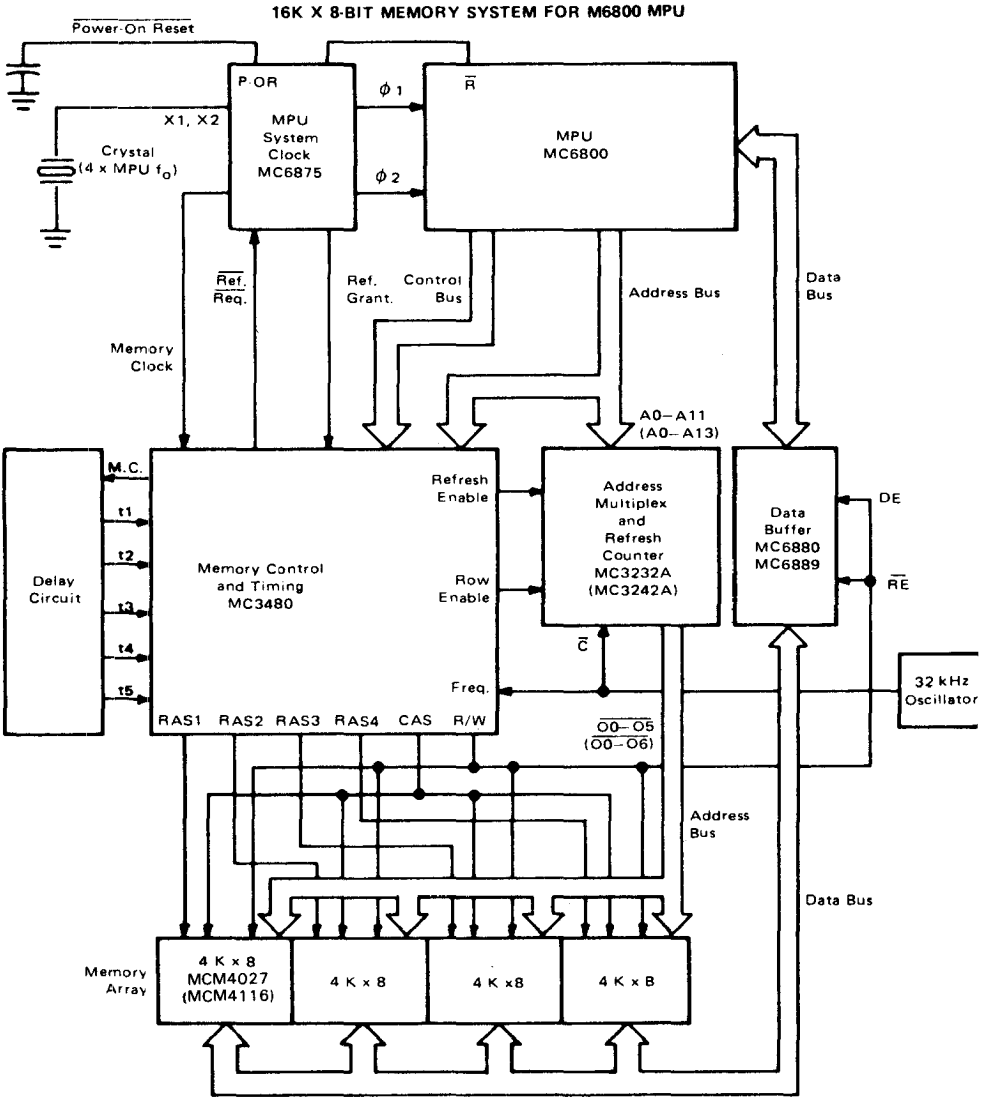

NOTE
Number in parenthesis indicate part types or values for 16 K x 1 RAMs.

NMOS Memories to TTL Systems (continued)

BUS EXTENSION
(See Microprocessor Bus)

Data Bus (Bidirectional) Extenders
MC6880A/MC8T26A – Inverting
MC6889/MC8T28A – Non-inverting

Address Bus (Unidirectional) Extenders
MC6885/MC8T95 – Hex Non-inverting
MC6886/MC8T96 – Hex Inverting
MC6887/MC8T97 – Hex Non-inverting
MC6888/MC8T98 – Hex Inverting
MC6882A/MC3482A – Octal Inverting
MC6882B/MC3482B – Octal Non-inverting

DATA AND ADDRESS LINE DRIVERS
(Low Level)

MC3459 – Quad Address Line Driver

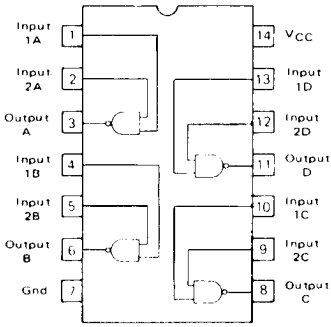

T_A = 0 to 70°C

Packages:
L Suffix – Case 632
P Suffix – Case 646

Device Number	V_{OH} Volts Min	@ I_{OH} mA	V_{OL} Volts Max	@ I_{OL} mA	Propagation Delay ns Max	@ C_L pF	Features
MC3459	2.4	-2.0	0.7	80	26	360	High fan-out capability

CLOCK AND CHIP ENABLE LINE DRIVERS
(High Level)

MMH0026
MMH0026C – Dual Clock Driver

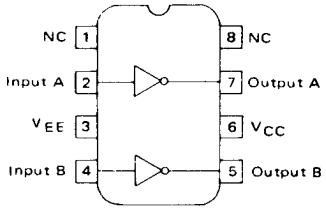

(Pin Connections for U or P1 Package)

T_A:
MMH0026 – -55 to 125°C
MMH0026C – 0 to 70°C

Packages
G Suffix – Case 601
L Suffix – Case 632
U Suffix – Case 693
P1 Suffix – Case 626 (For MMH0026C only)

Device Number	V_{OH} Volts Min	@ I_{OH} mA	V_{OL} Volts Max	@ I_{OL} mA	t_{DHL} ns Max	@ C_L pF	Feature
MMH0026 MMH0026C	V_C - 1.0	0.4 V*	V_{EE} + 1.0	2.4 V*	12	1000	For very high capacitance loads.

*@ V_I - V_{EE}

Magnetic Memories to TTL Systems

SENSE AMPLIFIERS

. . . for Magnetic Tape Memories

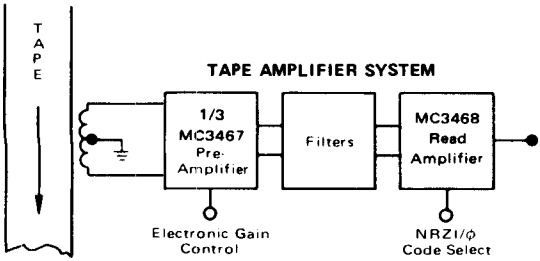

A two-component preamplifier/amplifier combination that provides the interface between magnetic tape heads and digital logic. Suitable for both open reel and cartridge tape systems. Triple preamp has individually adjustable gain controls. LSI Read Amplifier performs peak detection and threshold detection functions, as required for NRZI/phase encoded recording formats.

MC3467 – Triple Preamplifier

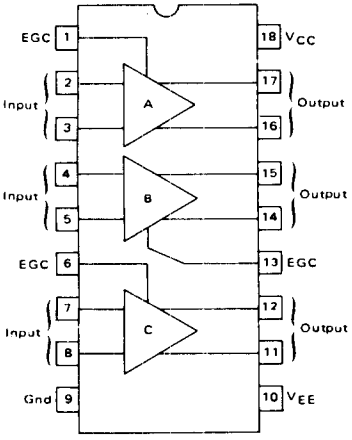

Both types:
T_A = 0 to 70°C
Packages:
L Suffix – Case 726
P Suffix – Case 701

MC3468 – Read Amplifier

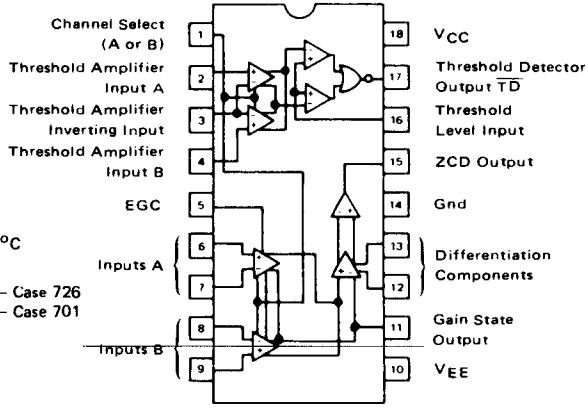

Floppy Discs to TTL Systems

MC3470 – Designed as a monolithic READ Amplifier System for obtaining digital information from floppy disk storage.

T_A = 0 to 70°C
Package:
P Suffix – Case 701

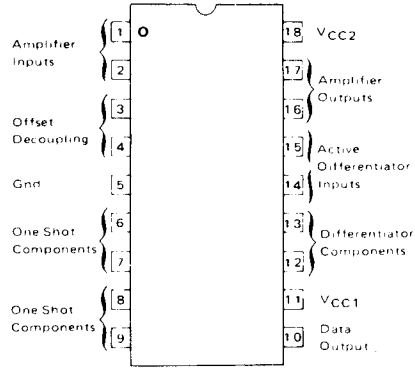

Floppy discs to TTL Systems (continued)

MC3469— A monolithic WRITE amplifyer system for writing digital information on floppy discs.

T_A = 0 to 70°C

Package: P Suffix — Case 648

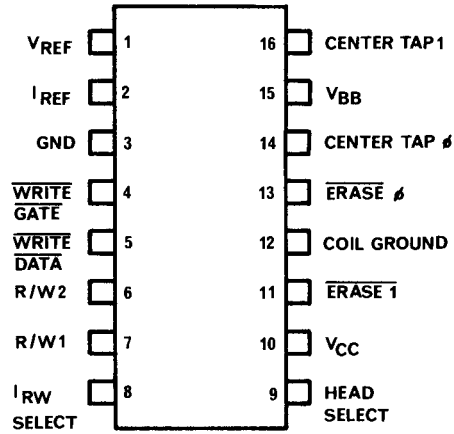

CORE DRIVER

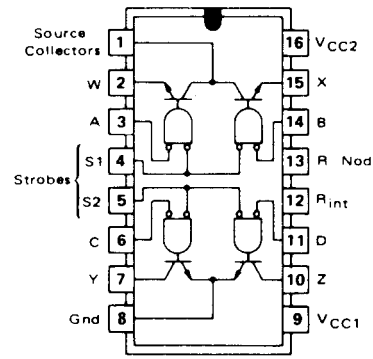

MC75325 – T_A = 0 to 70°C

Contains two source switches and two sink switches. Source and sink selection is determined by one of two logic inputs, and turn-on is determined by the appropriate strobe.

Packages:
- L Suffix – Case 620
- P Suffix – Case 648

Device Number	V_{sat} @ I_{sink} or I_{source} = 600 mA Volts Max	I_{off} @ V_{CC2} = 24 V μA Max	t_{PLH} (Source) ns Max	t_{PLH} (Sink) ns Max
MC75325	0.75	200	50	45

LINE DRIVERS AND RECEIVERS for Modem/Terminal Applications

Voltage Mode

RS-232C SPECIFICATION

DRIVER

MC 1488 – Quad; output current limiting.

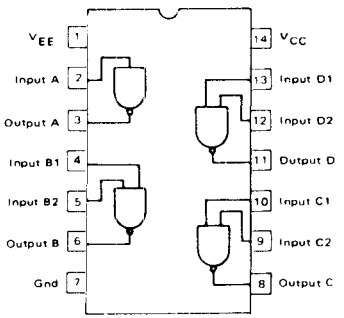

All devices:
T_A = 0 to 70°C
Package:
L Suffix – Case 632

V_{OH} @ V_{CC}/V_{EE} = +9.0 V Volts Min	V_{OL} @ V_{CC}/V_{EE} = +9.0 V Volts Max	I_{OS} mA	t_{PHL} @ C_L = 15 pF ns Max
6.0	-6.0	6.0 to 12	175

RECEIVERS

MC1489 – Quad; 0.25 V input hysteresis.
MC1489A – Quad; 1.1 V input hysteresis.

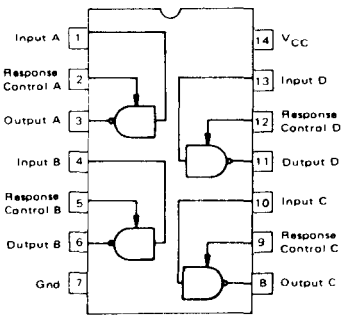

Device Number	Input V_{IHL} Volts	Input V_{ILH} Volts	t_{PHL} @ R_L = 390 Ω ns Max
MC1489	1.0 to 1.5	0.75 to 1.25	50
MC1489A	1.75 to 2.25	0.75 to 1.25	50

MC1488 MTL
MC1489 MTL } Available MTL Suffix = Military Temperature Range (–55° C to 125° C)

RS-422/423 SPECIFICATION RECEIVERS

MC3486— Quad; three-state outputs and input hysteresis, RS-422/423

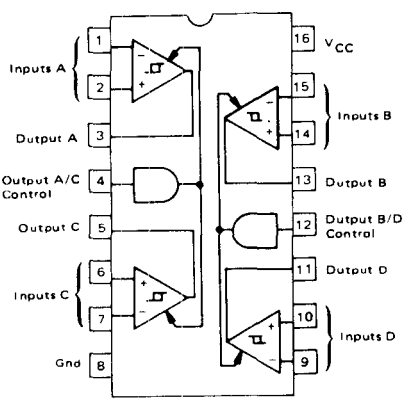

Both devices:
T_A = 0 to +70°C
Packages:
L Suffix — Case 620
P Suffix — Case 648

$V_{TH(D)}$ @ V_{ICM} = ±7.0 V Volts Max	I_{IB} @ $V_{I(D)}$ = ±10 V V_{CC} = 0 to 5.25 V mA Max	t_{PHL}/t_{PLH} ns Typ	$t_{P(Control)}$ ns Typ
±0.2	±3.25	20/25	25

AM26LS32 — Quad; three-state outputs and input hysteresis

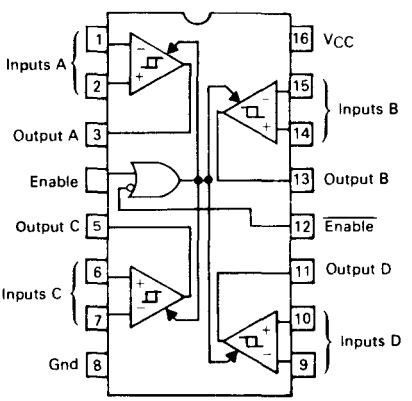

LINE DRIVERS and RECEIVERS for MODEM/TERMINAL APPLICATIONS (continued)

DRIVERS

MC3487 — Quad; three-state outputs, RS-422

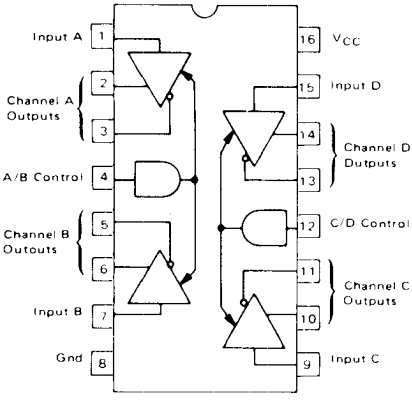

Both devices:
T_A = 0 to +70°C
Packages:
L Suffix — Case 620
P Suffix — Case 648

AM26LS31 — Quad; three-state outputs, RS-422

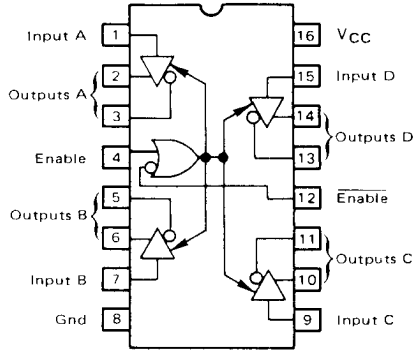

Device Number	V_{OH} @ I_{OH} = −20 mA Volts Min	V_{OL} @ I_{OL} = 48 mA Volts Max	V_{OD} (Differential) @ R_L = 100 Ω Volts Min	t_{PLH} & t_{PHL} ns Max
MC3487	2.5	0.5	2.0	20
AM26LS31	2.5	0.5	*	20

* Not guaranteed.

MC3488A (μA9636A) — Dual; **RS-423/232C** with adjustable slew rate.

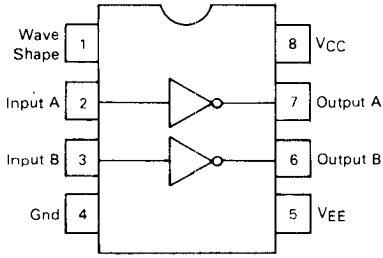

T_A = 0 to +70°C
Packages: P1 Suffix — Case 626
U Suffix — Case 693

RSaaa (PN 1360) BUS DRIVERS AND RECEIVERS

• SN75172

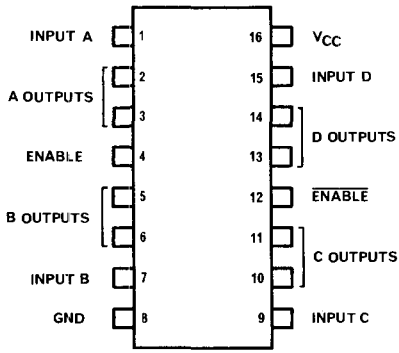

• SN75174

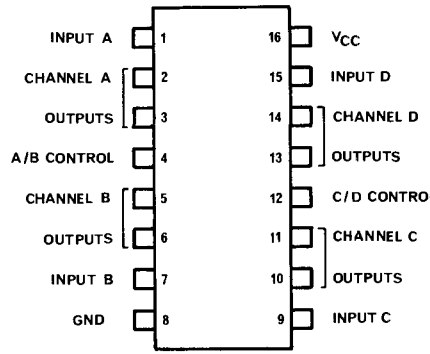

• SN75173

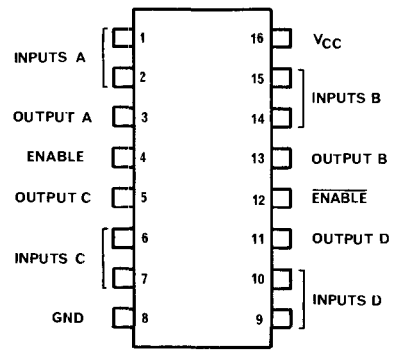

• SN75175

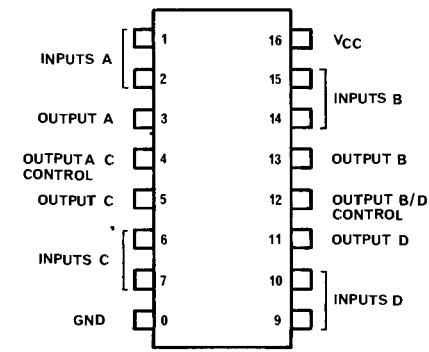

RSaaa (PN 1360) BUS TRANSCEIVERS

• SN75176
JG OR P PACKAGE
(TOP VIEW)

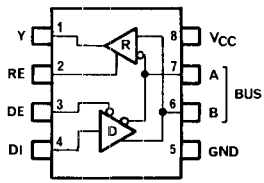

• SN75177
JG OR P PACKAGE
(TOP VIEW)

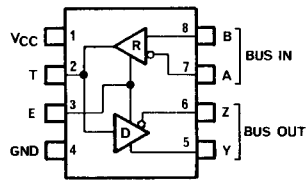

• SN 75178
JG OR P PACKAGE
(TOP VIEW)

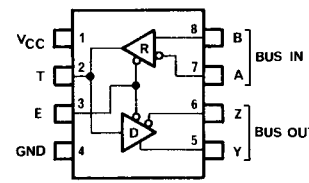

● to be introduced

Line Drivers and Receivers for Modem/Terminal Applications (continued)

Differential Current Mode

DRIVERS

MC75S110 – Dual; industry standard.

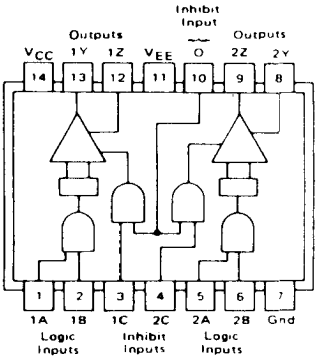

T_A = 0 to 70°C

Packages:
L Suffix – Case 632
P Suffix – Case 646

RECEIVERS

MC75107 – Dual; active pullup output.
MC75108 – Dual; open collector output.

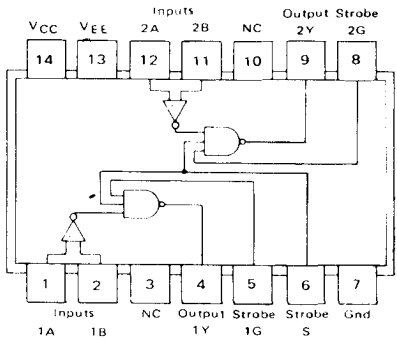

MC3453 – Quad; common inhibit input; current sink approximately 12 mA.

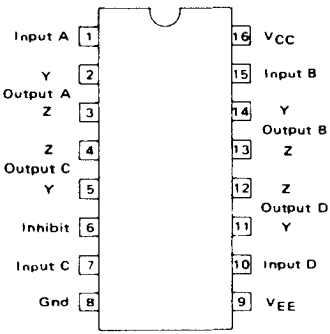

All three devices:
T_A = 0 to 70°C

Packages:
L Suffix – Case 620
P Suffix – Case 648

MC3450 – Quad; active pullup outputs; common three-state enable.

MC3452 – Quad; open collector outputs.

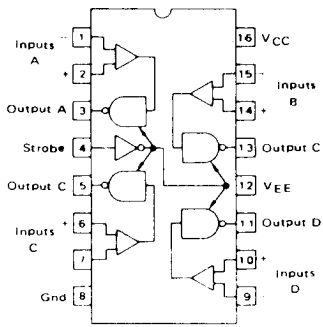

BOTH DRIVERS

I_O (on) mA Min	I_O (off) μA Max	t_{PHL} ns Max
6.5	100	15

ALL RECEIVERS

Input V_{TH} mV Max	I_{IH} @ V_{ID} = 0.5 V μA Max	I_{IL} @ V_{ID} = -2.0 V μA Max	t_{PLH} ns Max
±25	75	-10	25

Driver Arrays

ULN2068*— Quad 1.5 A, V_{CE} = 50 V Max

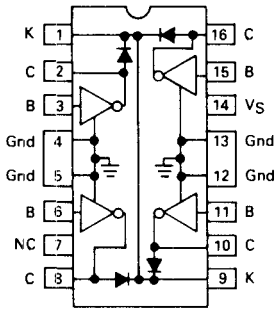

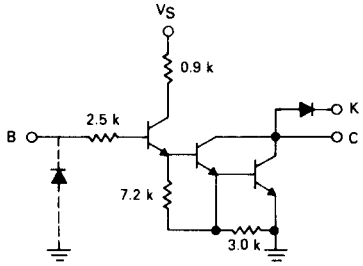

* Other members of series available. Contact Motorola Sales Office.

ULN2074— Quad 1.5 A, V_{CE} = 50 V Max
To be introduced

Both devices:
T_A = 0 to +70°C
Package:
B Suffix — Case 648C

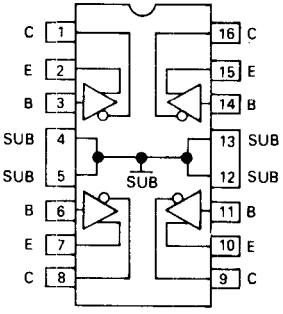

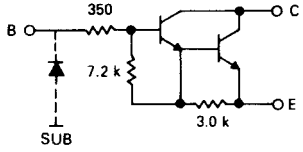

MC1411 Series/ULN2001 Series

Seven Darlington transistors with output clamp diodes.

Device Number	Application	Input Element
MC1411/ULN2001 MC1412/ULN2002	General Purpose 14–25 V PMOS	Basic Zener and Series 10.5 kΩ resistor
*MC1413/ULN2003 *MC1416/ULN2004	5 V CMOS or TTL 8–18 V MOS	Series 2.7 kΩ resistor Series 10.5 kΩ resistor

* Extended temperature range with CP Suffix (T_A = −40°C to 85°C) and MTL Suffix (T_A = −55°C to 125°C) available.

All Types:
V_{Max} = 50 V
I_{Max} = 500 mA
T_A = 0 to +85°C

Packages:
L Suffix — Case 620
P Suffix — Case 648

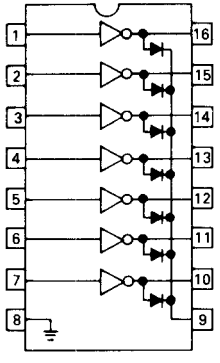

Driver Arrays (continued)

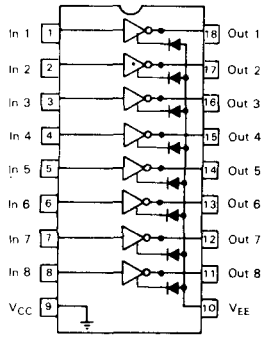

MC1417 high voltage, high current 8 Darlington transistor arrays.

The eight NPN Darlington connected transistors in these arrays are intended for use as an interface between NMOS output and driving lamps, relays of printer hammers.
Each driver has an output stage capable of sourcing 250mA.

T_A = 0 to 85° C
Packages
P Suffix – Case 701

ULN2803*— Octal Darlington array

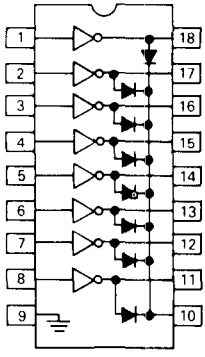

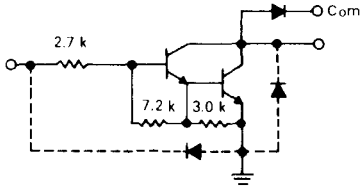

I_C = 500 mA
V_{CE} = 50 V Max
T_A = 0 to +70°C
Package:
A Suffix — Case 726

* Other members of series available. Contact Motorola Sales Office.

Dual Driver

. . . for relays, lamps, and other peripherals requiring more power than generally available from logic gates.

MC1472

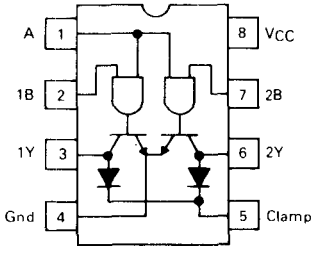

T_A = 0 to +70°C
Packages:
P1 Suffix — Case 626
U Suffix — Case 693

$V_{(BR)CER}$ = 70 V

Numeric Display Interface

. . . for mating multiplexed LED or gas discharge numeric displays to MOS or TTL logic systems.

LED Drivers for Common-Cathode Displays

MC 75491 – Quad segment driver

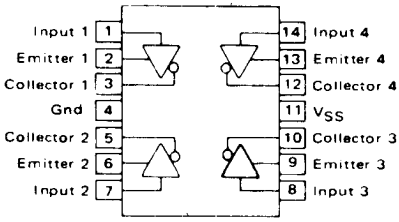

Both Devices:
T_A = 0 to 70°C

Packages:
L Suffix – Case 632
P Suffix – Case 646

MC75492 – Hex digit driver

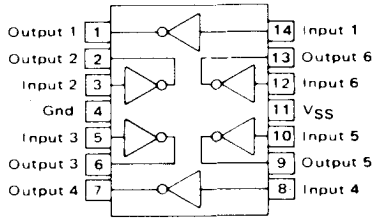

Device Number	I_I @ V_I = 10 V mA Max	V_{OL} Volts Max	@ I_{OL} mA	V_{SS} Volts Max
MC75491	3.3	1.2	250	10
MC75492	3.3	1.2	50	10

MC3491/ MC3492 – Eight segment cathode drivers with programmable current.

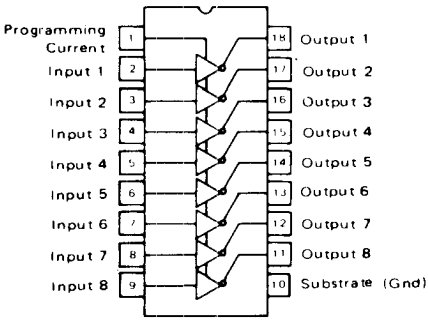

Package: P Suffix – Case 701

All Devices:
T_A = 0 to 70°C

MC3490 – High Level
MC3494 – Low Level
Seven digit anode drivers

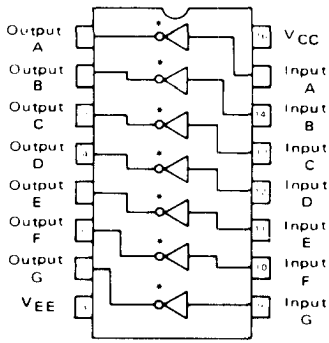

* Inverter on MC3494 only
Package: P Suffix – Case 948

Device Number	Output ON Current mA Max	Breakdown Voltage Volts Min	Current Deviation (All 8 Outputs) % Max	Output Voltage Compliance Range Volts
MC3491	1.85	80	10	5.0 to 50
MC3492	5.25	80	10	5.0 to 50

Device Number	Breakdown Voltage Volts Min	Input Voltage (OFF-State) Volts	Input Voltage (ON-State) Volts	Input Current µA Max
MC3490	48	5.0 Min	2.0 Max	450
MC3494	48	2.0 Max	5.0 Min	350

Precision Circuits – Data Conversion

Low-cost building blocks for construction of D-A/A-D systems. Involves use of advanced technologies such as ion implantation, laser trimming and CMOS processing where necessary to achieve the required functional capability, operating accuracy and production repeatability.

D-A Converters – General Purpose

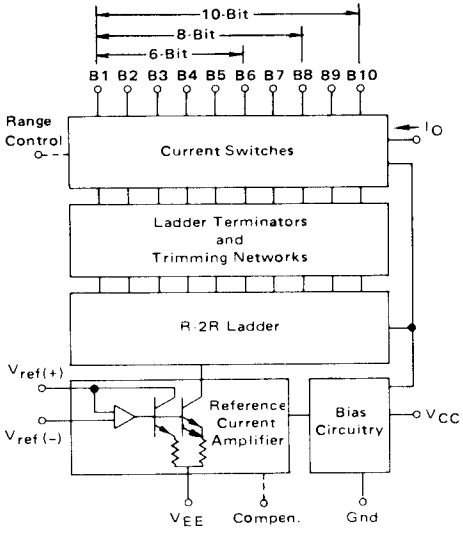

- - - Dotted terminals available on 6- and 8-bit units only.

Multiplying D-A converters designed to supply an output current that is a linear product of an analog input reference voltage and a digital input word. Devices for 6-, 8- and 10-bit digital word inputs are available.

Device Number	Error % Max	P_D @ V_{EE} = -5 V mW Max	$t_{Settling}$ ns Typ	I_O @ V_{ref} = 2V mA	Suffix	Case
6-Bit						
MC1506*	±0.78	120	150	1.9 to 2.1	L	632
MC1406						
8-Bit						
DAC-08A*	±0.1	48	85	1.984 to 2.000	Q	620
DAC-08*	±0.19					
DAC-08H	±0.1			1.940 to 2.040	P, Q	620, 648
DAC-08E	±0.19					
DAC-08C	±0.39					
MC1508L8*	±0.19	170	300	1.9 to 2.1	L	620
MC1408L8						
MC1408L7	±0.39				L, P	620, 648
MC1408L6	±0.78					
MC3408	±0.5				L	620
10-Bit						
MC3510*	±0.05	220	250	3.8 to 4.2	L	690
MC3410					L, P	690, 648
MC3410C	±0.1					

*T_A = −55 to +125°C,
Devices without asterisk: T_A = 0 to +70°C.

D-A Converters – High Speed

MC 10318L/L9— A high speed 8-bit D-A converter capable of data conversion rates in excess of 25 MHz. It is intended for applications in high speed instrumentation and communication equipment, display processing, storage oscilloscopes, radar processing, and TV broadcast systems. The inputs are compatible with MECL 10,000 series logic, while the complementary current outputs have 51 mA full scale capability. 8-bit accurate (± 1/2 LSB) and monotonic over the full temperature range, the outputs typically settle in less than 15 ns.

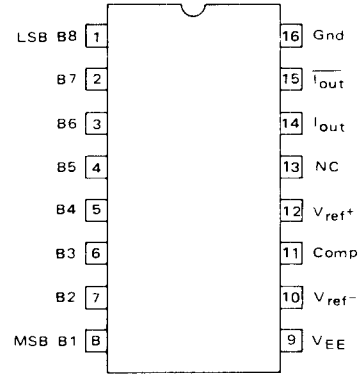

T_A = 0 to +70°C
Packages:
L Suffix — Case 620/690

Device Number	Error % Max	P_D @ I_{EE} = −5.2 V mW Max	$t_{Settling}$ ns Typ	I_{FS} & $\overline{I_{FS}}$ @ V_{ref} = 10.56 V mA Typ
MC10318L	±0.19	678	15	51
MC10318L9	±0.10	678	15	51

12-BIT D/A CONVERTERS

MC3412/MC3512 – A monolithic 12-bit D-A converter with a precision 10 volt bandgap reference. High stability, laser trimmed thin-film ladder, reference, bipolar offset and span resistors are utilized. This device is pin compatible with the AD563 and AD565 products.

MC3412: T_A = 0°C to +70°C
MC3512: T_A = −55°C to +125°C

Packages:
L Suffix — Case 623
P Suffix — Case 649

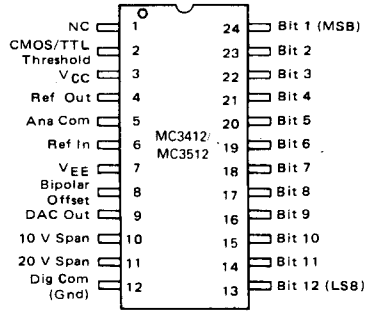

Accuracy %	tSettling ns Max	Unipolar FS Output Current mA Min/Max	P_D V_{CC} = 15 V, V_{EE} = −15 V mW Max
±0.012	400	−1.6/−2.4	330

AD562

- True 12-Bit Linearity: ±1/2 LSB Max
- Fast Settling Time: ±1/2 LSB in 200 ns Typ
- Fully Monotonic Over Temperature Range
- Low Gain Drift: 3 ppm/°C Max
- True Binary Coded Inputs
- Selectable Digital Thresholds
- Internal Span Resistors for Generating Output Voltage
- Low Power Consumption: 210 mW

PIN CONNECTIONS

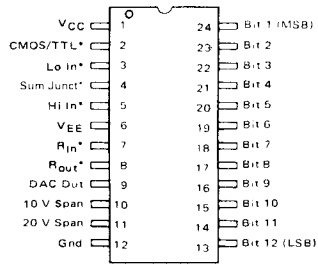

* Pin 2 = CMOS/TTL Threshold
Pin 3 = V_{Ref} Lo In
Pin 4 = Amp Summing Junction
Pin 5 = V_{Ref} Hi In
Pin 7 = Bipolar Offset R_{in}
Pin 8 = Bipolar Offset R_{out}

ORDERING INFORMATION

Device	Temperature Range	Accuracy 25°C
AD562KD	0°C to +70°C	±1/2 LSB
AD562AD	−25°C to +85°C	±1/2 LSB
AD562SD	−55°C to +125°C	±1/4 LSB

AD563

- True 12-Bit Linearity: ±1/2 LSB Max
- Fast Settling Time: ±1/2 LSB in 200 ns Typ
- Fully Monotonic Over Temperature Range
- High-Stability Bandgap Voltage Reference On Chip
- True Binary Coded Inputs
- Selectable Digital Thresholds
- Internal Span Resistors for Generating Output Voltage
- Low Power Consumption: 210 mW
- Low Cost Monolithic Design

PIN CONNECTIONS

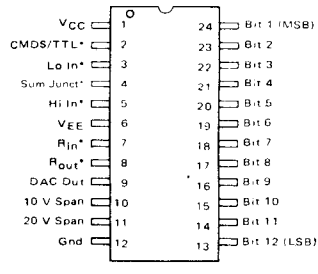

ORDERING INFORMATION

Device	Temperature Range	Accuracy 25°C	Gain TC *(ppm of FS/°C)
AD563JD	0°C to +70°C	±1/2 LSB	30
AD563KD	0°C to +70°C	±1/4 LSB	20
AD563SD	−55°C to +125°C	±1/4 LSB	30
AD563TD	−55°C to +125°C	±1/4 LSB	10

D-A Converters – MPU Bus Compatible

MC6890/MC6890A – A self-contained, bus-compatible, 8-bit D-A converter system capable of interfacing directly with 8-bit microprocessors.
This converter contains master/slave registers to prevent transparency to data transitions during active enable. Other features include a 2.5 V precision bandgap reference, high stability, laser-trimmed, thin-film resistors for both reference input and output span and bipolar offset control.

MC6890: T_A = 0°C to +70°C
MC6890A: T_A = −55°C to +125°C

Packages:
L Suffix — Case 732
P Suffix — Case 738

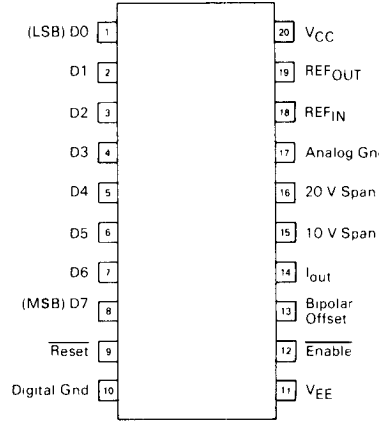

Relative Accuracy %	$t_{Settling}$ ns Typ	Data Setup Time ns Min	Data Hold Time ns Min	P_D V_{CC} = 4.5 V, V_{EE} = −4.5 V mW Max
±0.19	200	40	0	158

A-D Subsystems

2-Chip A-D Converter System Functional Diagram

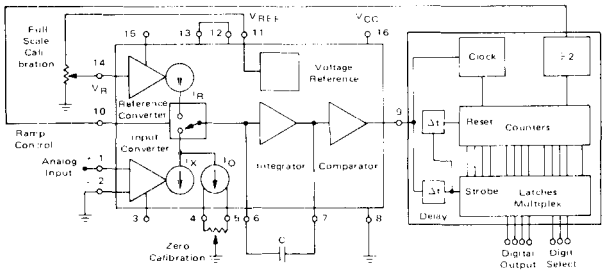

MC1505/1405 – A-D Converter MC14435 – Digital Logic

These devices are relatively complex subsystems. The bipolar, dual-ramp A-D converter has up to 4-1/2-digit conversion capability. The CMOS logic subsystem specifically adapts the A-D converter to a 3-1/2-digit DVM function.

MC1505L — T_A = −55 to +125°C — Case 620
MC1405L — T_A = 0 to +70°C — Case 620

Linearity Error % Max	Voltage Reference Volts	Temperature Coefficient of Reference %/°C	I_{CC} @ V_{CC} = 5.0 V mA Max
±0.05	1.15 to 1.35	0.005	12

MC14435EFL/EVL* —T_A = −55 to +125°C — Case 620
MC14435FL/VL* —T_A = −40 to +85°C — Case 620
MC14435FP/VP* —T_A = −40 to +85°C — Case 648

$P_{C(quiescent)}$ @ V_{DD} = 5.0 V mW Max	I_{OL} @ V_{DD} = 5.0 V (Digit Selects) mA Min	I_{OL} @ V_{DD} = 5.0 V (BCD Outputs) mA Min	I_{OL} @ V_{DD} = 5.0 V (All Outputs) mA Min
1.75	1.6	1.6	-0.2

*MC14435EFL/FL/FP: V_{DD} = 3.0 to 18 Vdc
MC14435EVL/VL/VP: V_{DD} = 3.0 to 6.0 Vdc

A-D Converters – High Speed

MC10317L — A high speed 7-bit parallel flash A-D converter capable of conversion rates in excess of 20 MHz. Eight bits of accuracy and an overrange bit permits paralleling of two devices to provide a cost effective 8-bit conversion. Applications include TV broadcast systems, radar encoding, high-speed instrumentation and tomography.

The outputs are compatible with MECL 10,000 series logic.

T_A = 0°C to +70°C
Package:
L Suffix – Case 716

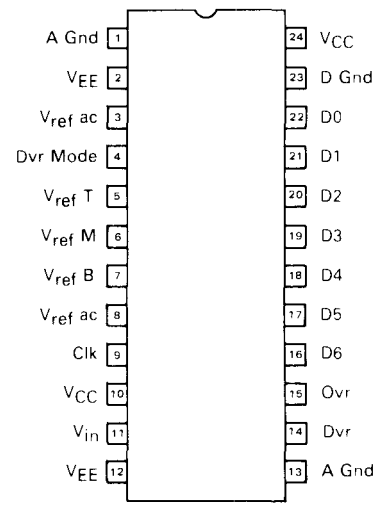

Accuracy %	Input Voltage Range Volts	Voltage Reference Volts	Conversion Rate MHz	P_D mW	Features
±0.19	±2.0	1.0 to 2.0	20	1000	Binary or 2's Complement Output-Coding

A-D Converters – MPU Bus Compatible

MC6891/MC6891A — A fully integrated single supply 8-bit A-D converter capable of interfacing directly with all popular 8-bit microprocessors without external output buffers. The device has a precision 2.5 volt reference and features four analog input voltage ranges, one of which is bipolar. Logic inputs R/$\overline{W}$, $\overline{CS}$ and A0 provide: chip address, start of conversion, status check, READ data and maskable/unmaskable interrupts control.

MC6891: T_A = 0°C to +70°C
MC6891A: T_A = −55°C to +125°C

Packages:
L Suffix — Case 732
P Suffix — Case 738

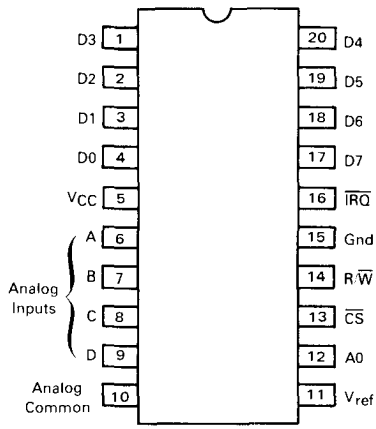

Accuracy %	Conversion Time ns Typ	Analog Input Volts	Usable Bus Speed MHz	P_D V_{CC} = 5.0 V mW Typ
±0.19	20	0 to 2.5, 0 to 5.0, 0 to 10, ±5.0	2.0	100

Precision Low-Voltage References

A family of precision low-voltage bandgap voltage reference, these devices are designed for applications requiring low temperature drift.

MC1400/MC1500
MC1404/MC1504

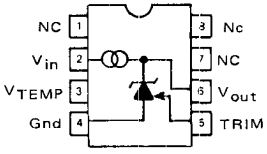

MC1403/MC1503

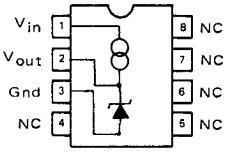

Packages:
U Suffix — Case 693

Low Temperature Drift, Low Voltage Reference

V_{out} Volts Typ	I_O mA Max	$\Delta V_{out}/\Delta T$ ppm/°C Max	Device Number	Reg_{line} mV Max	Reg_{load} mV Max	T_A °C
2.5 ± 5.0 mV	±10	25	MC1400U2	3.0	10	0 to +70
		10	MC1400AU2			
		40	MC1500U2	Note 1	Note 4	−55 to +125
		10	MC1500AU2			
2.5 ± 25 mV	10	40	MC1403	3.0/4.5	10	0 to +70
		25	MC1403A			
		55	MC1503	Note 2	Note 5	−55 to +125
		25	MC1503A			
5.0 ± 10 mV	±10	25	MC1400U5	4.0	20	0 to +70
		10	MC1400AU5			
		40	MC1500U5	Note 1	Note 4	−55 to +125
		10	MC1500AU5			
5.0 ± 50 mV	10	40	MC1404U5	6.0	10	0 to +70
		25	MC1404AU5			
		55	MC1504U5	Note 3	Note 5	55 to +125
		25	MC1504AU5			
6.25 ± 10 mV	±10	25	MC1400U6	4.0	20	0 to +70
		10	MC1400AU6			
		40	MC1500U6	Note 1	Note 4	−55 to +125
		10	MC1500AU6			
6.25 ± 60 mV	10	40	MC1404U6	6.0	10	0 to +70
		25	MC1404AU6			
		55	MC1504U6	Note 3	Note 5	−55 to +125
		25	MC1504AU6			
10 ± 20 mV	±10	25	MC1400U10	4.0	20	0 to +70
		10	MC1400AU10			
		40	MC1500U10	Note 1	Note 4	−55 to +125
		10	MC1500AU10			
10 ± 100 mV	10	40	MC1404U10	6.0	10	0 to +70
		25	MC1404AU10			
		55	MC1504U10	Note 3	Note 5	−55 to +125
		25	MC1504AU10			

Notes: 1. $(V_{out} + 1.0\ V) \leq V_{in} \leq 40\ V$.
2. $4.5\ V \leq V_{in} \leq 15\ V/15\ V \leq V_{in} \leq 40\ V$.
3. $(V_{out} + 2.5\ V) \leq V_{in} \leq 40\ V$.
4. $-10\ mA \leq I_L \leq +10\ mA$.
5. $0\ mA \leq I_L \leq 10\ mA$.

General Purpose Comparators

. . . for detecting the polarity relationship between two analog levels and giving a corresponding TTL output.

MC1710 – T_A = -55 to 125°C
MC1710C – T_A = 0 to 70°C
Single comparators

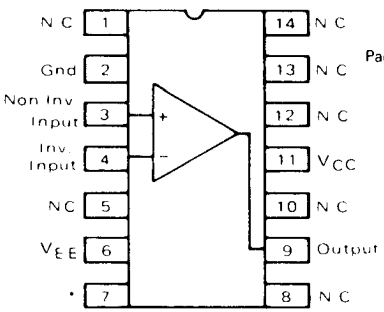

*Connected to pin 6 via the substrate on some plastic units.

Packages:
G Suffix – Case 601 (MC1710)
G Suffix – Case 603 (MC1711)
L Suffix – Case 632
P Suffix – Case 646 (for MC1710C, MC1711C only)

(Pin Connections for L or P Package)

MC1711 – T_A = -55 to 125°C
MC1711C – T_A = 0 to 70°C
Dual comparators with strobes and wire-ORed outputs

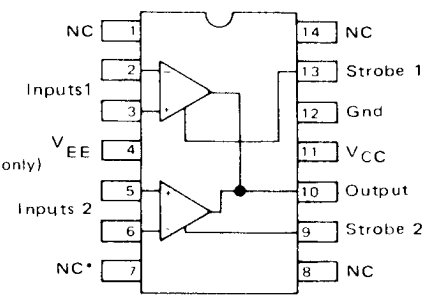

*Connected to pin 4 via the substrate on some plastic units.

MC1514 – T_A = -55 to 125°C
MC1414 – T_A = 0 to 70°C
Dual comparators with strobes.

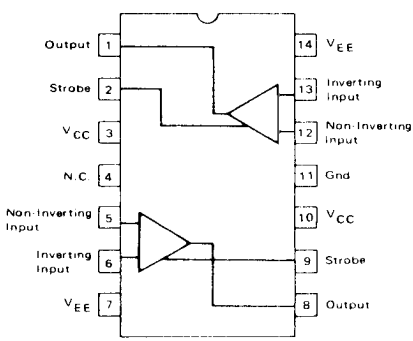

Packages:
L Suffix – Case 632
P Suffix – Case 646 (MC1414 only)

Device Number	V_{IO} mV Max	I_{IB} μA Max	A_{VOL} V/V Min
MC1710C	5.0	25	1000
MC1710	2.0	20	1250
MC1711C	5.0	100	700
MC1711	3.5	75	700
MC1514	2.0	20	1250
MC1414	5.0	25	1000

Precision Comparators

. . . featuring low input loading, high voltage gain, and a choice of either dual or single positive power supply operation.

LM111 – T_A = -55 to 125°C
LM211 – T_A = -25 to 85°C
LM311 – T_A = 0 to 70°C
Single comparators; high gain, high input impedance; strobe and balance inputs provided.

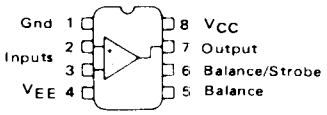

(Pin Connections for J-8 or N Package)
Packages:
H Suffix – Case 601
J-8 Suffix – Case 693
J Suffix – Case 632
N Suffix – Case 626 (LM311 only)

Device Number	V_{IO} mV Max	I_{IB} nA Max	V_{OL} @ I_{OL} = 50 mA Volts Max
LM111	3.0	100	1.5
LM211	3.0	100	1.5
LM311	7.5	250	1.5

Dual Comparators

LM 193 series

. . . Low power low offset voltage Dual Comparators

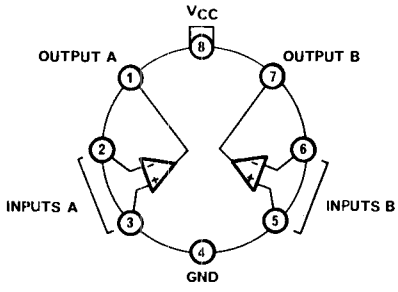

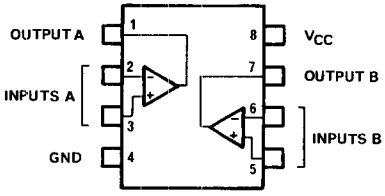

LM193 – T_A = – 55 to + 125°C
LM293 – T_A = – 25 to + 85°C
LM393 – T_A = 0 to + 70°C
LM2903 – T_A = – 40 to + 85°C

(or Metal package case 601)

H suffix – case 601
LM193 *
LM293 *
LM393 *

N suffix – case 626
LM393 *
LM2903

* Lower input offset voltage available with A suffix

Quad Comparators . . . for applications requiring multiple comparators.

MC3430, **MC3431** – High-speed quad comparators with three-state Enable common to all four devices; ±5 volt supply; T_A = 0 to 70°C.

MC3432, **MC3433** – Quad comparators with open collector outputs, common strobe input; ±5 volt supply; T_A = 0 to 70°C.

LM139, **LM139A** – T_A = −55 to 125°C

MC3302, **LM2901**, **LM239**, **LM239A** – T_A = −40 to 85°C

LM339, **LM339A** – T_A = 0 to 70°C

Single supply voltage comparators.

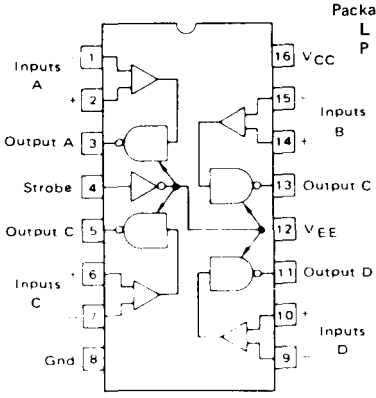

Packages:
L Suffix – Case 620
P Suffix – Case 648

Packages:
J Suffix – Case 632
N Suffix – Case 646 (For all devices *except* LM139, LM139A)

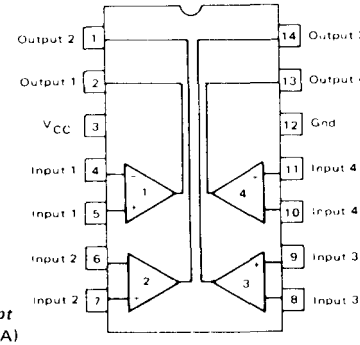

Device Number	V_{IS} mV Max	I_{IB} μA Max	t_{PHL} ns Max
MC3430	±6.0	20	45
MC3431	±10	20	45
MC3432	±6.0	20	50
MC3433	±10	20	50

Device Number	V_{IO} @ 25°C mV Max	I_{IB} @ 25°C nA Max	I_{sink} @ V_{OL} = 500 mV mA Min	V_{OL} @ I_{OL} = 2.0 mA* @ I_{OL} = 3.0 mA** @ I_{OL} = 4.0 mA mV Max
MC3302	20	1000	–	400*
LM2901	7.0	250	6.0	400**
LM139	5.0	100	6.0	500
LM139A	2.0	100	6.0	500
LM239	5.0	250	6.0	500
LM239A	2.0	250	6.0	500
LM339	5.0	250	6.0	500
LM339A	2.0	250	6.0	500

LSI

Bipolar high-performance LSI improves system integration level and density.

This higher level of component technology serves to improve cost, increase reliability, and allows system introductions containing a higher level of hardware technology than otherwise achievable.

Table of Contents

	Page
MECL 10,000 Macrocell Array Family	8-2
M10900 Family	8-3
MECL LSI	8-3
LSI	8-4

MECL 10,000 Macrocell Array Family

The Macrocell Array Approach Toward High-Speed VLSI Digital Systems

The Macrocell Array Concept combines a pre-diffused array of components with computer-aided design techniques to offer system designers a rapid, cost-effective means for implementing semi-custom, high-speed digital logic systems with VLSI circuitry.

Compared with equivalent systems developed with discrete logic (separately packed SSI/MSI logic functions) the high packing density of the Macrocell array chip offers up to 50-to-1 reduction in system component count, with a power dissipation improvement (reduction) of as much as 5 to 1.

Compared with the conventional approach to custom LSI circuits, the Macrocell approach offers a tremendous reduction in delivery time. With a stockpile of fully diffused wafers, turnaround time (from the time the customer gives the go-ahead signal for generating the metal mask until he receives finished parts) is an anticipated 13 weeks.

MECL Macrocell Array family members presently consist of the MCA 1200 ECL (68 pin) array and the MCA600 ECL (28, 40 and 68 pin) array.

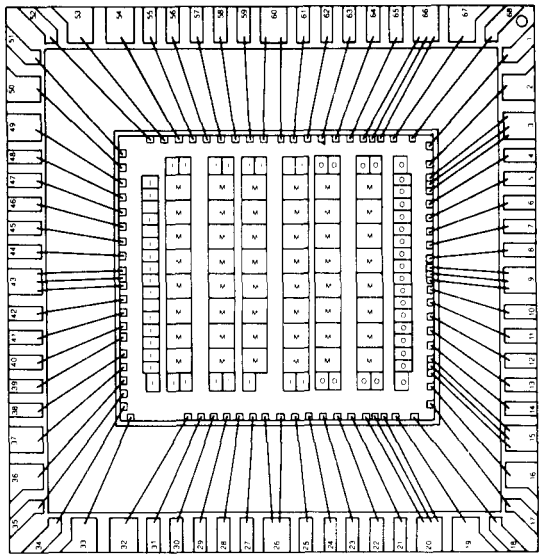

MCA1200 ECL mounted in 68-Lead Chip Carrier

The following TTL compatible Macrocell Arrays are also available: MCA 1200 ECL
MCA 600 ECL
MCA 2500 ECL*
MCA 500 ALS
MCA 1800 ALS*

* soon to be introduced

Macrocell Array Comparison Chart

PARAMETER	MCA 1200 ECL	MCA 600 ECL	MCA 500 ALS
1. MAXIMUM EQUIVALENT GATES	1192	652	533
2. MAJOR MACROCELLS	48	24	24
3. INTERFACE/INPUT MACROCELLS	32	25	26
4. OUTPUT MACROCELLS	26	18	24
5. MAXIMUM GATE DELAY	1.2 nS	1.2 nS	4.0 nS
6. POWER DISSIPATION	4 WATTS	2.5 WATTS	1.1 WATTS
7. PACKAGE	68 LEADLESS	28,40 DIL 68 LEADLESS	28,40 DIL 68 LEADLESS
8. TEMPERATURE RANGE	0–70 °C	0–70 °C	0–70 °C
9. I/O INTERFACE	MECL 10,000	MECL 10,000	ALS TTL
10. DESIGN INTERFACE	CAD	CAD	CAD

M10900 Family

The M10900 family is a series of very high performance bipolar LSI products designed off the MECL Macrocell Array offering. While the Macrocell Array is normally used for custom circuits which require option development time and costs, the M10900 family is a standard product ordered like any other MECL 10,000 circuit.

MC10900Z — 8-Bit ALU with Parity

MC10901Z — 8 × 8 Bit Expandable Multiplier

MC10902Z — 8-Bit BCD/Binary ALU

MC10904Z — Micro-Code Sequencer

MC10905Z — Error Detect and Correct

MECL LSI

MC10800 Series (0° C to +75° C)

Bit Slice Series

The M10800 (ECL) Family

Offering the fastest cycle times of any available bit-slice processor family, the M10800 series of ECL 4-bit processor functions permit the design of high-speed computer systems.

The core of any M10800-based system is the Arithmetic and Logic Unit (ALU). It operates at system-clock frequencies of 10 to 15 MHz, which represent cycle times of 60 to 100 ns. System word size starts at the ALU width of 4 bits, but can be expanded to n × 4 bits by cascading ALU sections. To support the ALU, Motorola has developed several ECL circuits that take care of most of the housekeeping without restricting the processor design.

Intended to address the instructions stored in the microprogram memory, the MC10801 Microprogram Controller provides a 4-bit address that can be expanded to any size by cascading controllers. A memory interface unit, the MC10803, also has a cascadable 4-bit output bus, but it connects to the address bus of the main memory and supplies all the read and write addresses.

Acting as a register file, stack or I/O buffer, the MC10806 dual-port memory provides 32 words × 9 bits of temporary storage and can be accessed through either of its ports. For high-speed mathematical operations, the MC10808 Multibit Shifter can handle up to 16 bits and, under software control, can do left-shift, right-shift or rotate operations. Additional MC10808s can be cascaded for larger word lengths.

Other support circuits include the MC10804 and MC10805 Bidirectional Bus Translators (ECL-to-TTL and vice-versa) and all of the MECL 10,000 series of logic circuits.

Function	Device Type 0° to +75° C	Case
4-Bit ALU Slice	MC10800	725
Microprogram Control Function	MC10801	725
Memory Interface Function	MC10803	725
4-Bit MECL-TTL Bidirectional Translator	MC10804	620
5-Bit MECL-TTL Bidirectional Translator	MC10805	732
32 × 9-Bit Dual Access Stack	MC10806	725
5-Bit Transceiver	MC10807	620
16-Bit Programmable Shifter Function	MC10808	725
Address and Data Interface Unit (A & IU)	MC10809	*

*To be introduced.

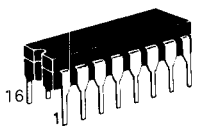

L SUFFIX
CERAMIC PACKAGE
CASE 620

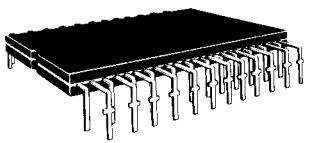

L SUFFIX
CERAMIC PACKAGE
CASE725

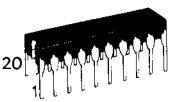

L SUFFIX
CERAMIC PACKAGE
CASE 732

LSI
Integrated Circuits

TTL LSI

Designers can now implement highly complex systems with only a few basic off-the-shelf LSI components. Benefits include lower system costs, off-the-shelf availability, improved reliability, lower system power drain, fewer parts to assemble and inspect, and more compact system architecture.

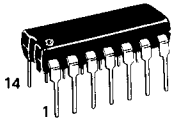

P SUFFIX
PLASTIC PACKAGE
CASE 646

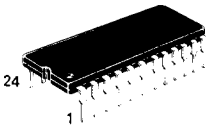

L SUFFIX
CERAMIC PACKAGE
CASE 623

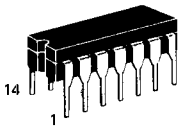

L SUFFIX
CERAMIC PACKAGE
CASE 632

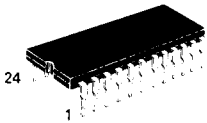

P SUFFIX
PLASTIC PACKAGE
CASE 649

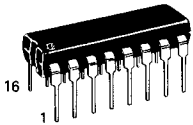

P SUFFIX
PLASTIC PACKAGE
CASE 648

Device	Function	Case	Applications
MC8500	CRCC Generator	623,649	Magnetic tape drive controllers using NRZI or GCR recordings, 7 or 9 channels.
MC8501	Error Pattern Register	620,648	
MC8502	LRCC/Data Register	623,649	
MC8503	Universal Polynomial Generator (16-bit)	632,646	Cassette, floppy disc, data communications
MC8504	Universal Presettable Polynomial Generator (4-Bit, Cascadable)	620,648	High-speed disc controllers, digital filtering
MC8506	Polynomial Generator (16-Bit)	620,648	Floppy disc, SDLC terminals
MC8507 MC6828	Priority Interrupt Controller	623,649	PIC in used to add prioritized responses to inputs to microprocessor systems
MC8520	Deskew/Queue Register	623	Magnetic tape drive controllers, phase encoded

Chapter 9

Bipolar Memories

Motorola has developed a very broad line of bipolar memories for virtually any digital system applications. New processes are continually being perfected resulting in larger and faster memories. For late releases, additional technical information, or pricing, contact your authorized Motorola distributor or sales office.

Table of Contents

	Page
Random-Access Memories (RAMs)	9-2
ECL RAMs	9-2
TTL RAMs	9-2
Programmable Read-Only Memories (PROMs)	9-2
ECL PROMs	9-2
TTL PROMs	9-2

Bipolar Memories

RAMs

Organization	Part Number	Access Time (ns Max)	Number Pins	Second Source
ECL RAMs				
8 x 2	MCM10143	15	24	
256 x 1	MCM10144	26	16	ss
16 x 4	MCM10145	15	16	ss
1024 x 1	MCM10146	29	16	ss
1024 x 1	MCM10146A*	15	16	ss
128 x 1	MCM10147	15	16	ss
64 x 1	MCM10148	15	16	ss
256 x 1	MCM10152	15	16	ss
4096 x 1	MCM10470*	35	18	ss
4096 x 1	MCM10470-1	20	18	ss
1024 x 4	MCM10474*	25	24	ss
TTL RAMs				
256 × 4	MCM93422*	45	22	ss
256 × 4	MCM93L422*	55	22	ss
1024 × 4	MCM93415	45	16	ss
1024 × 4	MCM93425	45	16	ss

PROMs

Organization	Part Number	Access Time (ns Max)	Number Pins	Second Source
ECL PROMs				
32 × 8	MCM10139	20	16	ss
256 × 4	MCM10149	25	16	ss
TTL PROMs				
512 x 4	MCM7621*	50	16	ss
512 x 8	MCM7641*	50	24	ss
1024 x 4	MCM7643	70	18	ss
1024 x 8	MCM7681	70	24	ss
2048 x 4	MCM7685*	50	18	ss
2048 x 4	MCM7689*	50	18	ss
2048 x 8	MCM76161*	75	24	ss

Operating temperature range:
ECL: Consult individual data sheets.
TTL: Consult individual data sheets.

* To be introduced.

Chapter 10

Logic Circuits

Motorola carries a comprehensive inventory of standard components encompassing all major bipolar digital logic families and technologies.

Table of Contents

	Page
MECL 10,000 Series	10-2
MECL10KH Series	10-5
MECL III Series	10-6
Components for Phase-Locked Loop Applications	10-7
LS TTL 54LS00/74LS00 Series	10-9
ALS TTL 54ALS00/74ALS00 Series	10-14
FAST TTL 54F00/74F00 Series	10-16
MTTL Complex Functions	10-17
MTTL III Series	10-19
MDTL Series	10-20
MHTL Series	10-22

MECL 10,000
Integrated Circuits

MC10,100/10,200 Series (−30 to +85°C)
MC10,500/10,600 Series (−55 to +125°C)

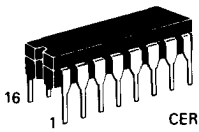

L SUFFIX
CERAMIC PACKAGE
CASE 620

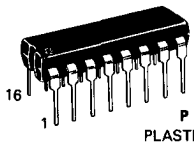

P SUFFIX
PLASTIC PACKAGE
CASE 648

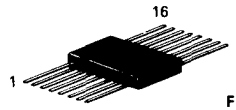

F SUFFIX
CERAMIC PACKAGE
CASE 650

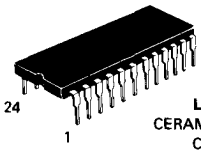

L SUFFIX
CERAMIC PACKAGE
CASE 623

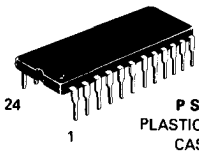

P SUFFIX
PLASTIC PACKAGE
CASE 649

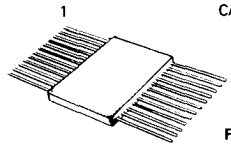

F SUFFIX
CERAMIC PACKAGE
CASE 652

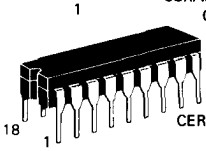

L SUFFIX
CERAMIC PACKAGE
CASE 726

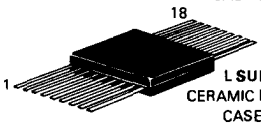

L SUFFIX
CERAMIC PACKAGE
CASE 747

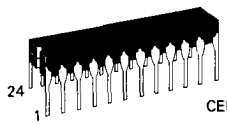

L SUFFIX
CERAMIC PACKAGE
CASE 748

Function	Device Type −30 to +85°C	Device Type −55 to +125°C	Case
NOR Gates			
Quad 2-Input with Strobe	MC10100	MC10500	620, 648, 650
Quad 2-Input	MC10102	MC10502	620, 648, 650
Triple 4-3-3-Input	MC10106	MC10506	620, 648, 650
Dual 3-Input 3-Output	MC10111	—	620, 648
High Speed Dual 3-Input 3-Output	MC10211	MC10611	620, 648, 650
OR Gates			
Quad 2-Input	MC10103	MC10503	620, 648, 650
Dual 3-Input 3-Output	MC10110	—	620, 648
High Speed Dual 3-Input 3-Output	MC10210	MC10610	620, 648, 650
AND Gates			
Quad 2-Input	MC10104	MC10504	620, 648, 650
Hex	MC10197	MC10597	620, 648, 650
Complex Gates			
Quad OR/NOR	MC10101	MC10501	620, 648, 650
Triple 2-3-2 Input OR/NOR	MC10105	MC10505	620, 648, 650
Triple 2-Input Exclusive OR/Exclusive NOR	MC10107	MC10507	620, 648, 650
Dual 4-5-Input OR/NOR	MC10109	MC10509	620, 648, 650
Quad Exclusive OR	MC10113	MC10513	620, 648, 650
Dual 2-Wide 2-3-Input OR-AND/OR-AND-Invert	MC10117	MC10517	620, 648, 650
Dual 2-Wide 3-Input OR-AND	MC10118	MC10518	620, 648, 650
4-Wide 4-3-3-3 Input OR-AND Gate	MC10119	MC10519	620, 648, 650
OR-AND/OR-AND-INVERT Gate	MC10121	MC10521	620, 648, 650
Hex Buffer with Enable	MC10188	—	620, 648
Hex Inverter with Enable	MC10189	—	620, 648
Hex Inverter/Buffer	MC10195	MC10595	620, 648, 650
High-Speed Dual 3-Input 3-Output OR/NOR	MC10212	MC10612	620, 648, 650
Translators			
Quad MTTL to MECL	MC10124	MC10524	620, 648, 650
Quad MECL to MTTL	MC10125	MC10525	620, 648, 650
Triple MECL to NMOS	MC10177	—	620
Receivers			
Triple Line	MC10114	MC10514	620, 648, 650
Quad Line	MC10115	MC10515	620, 648, 650
Triple Line	MC10116	MC10516	620, 648, 650
High Speed Triple Line	MC10216	MC10616	620, 648, 650
Quad Bus	MC10129	—	620

Function	Device Type −30 to +85°C	Device Type −55 to +125°C	Case
Flip-Flops			
Dual Type D Master-Slave	MC10131	MC10531	620,648,650
High Speed Dual Type D Master-Slave	MC10231	MC10631	620,648,650
Dual J-K Master-Slave	MC10135	MC10535	620,648,650
Hex D Master-Slave	MC10176	MC10576	620,648,650
Drivers			
Triple 4-3-3 Input Bus Driver	MC10123	—	620,648
Bus Driver	MC10128	—	620
Quad Bus Driver	MC10192	—	620,648
Parity Checker			
12-Bit Parity Generator-Checker	MC10160	MC10560	620,648,650
Encoder			
8-Input Encoder	MC10165	MC10565	620,648,650
Decoders			
Binary to 1-8 (low)	MC10161	MC10561	620,648,650
Binary to 1-8 (high)	MC10162	MC10562	620,648,650
Dual Binary to 1-4 (low)	MC10171	MC10571	620,648,650
Dual Binary to 1-4 (high)	MC10172	MC10572	620,648,650
Data Selectors/Multiplexers			
Dual Multiplexer with Latch and Common Reset	MC10132	MC10532	620,648,650
Dual Multiplexer with Latch	MC10134	MC10534	620,648,650
Quad 2-Input Multiplexer (noninverting)	MC10158	MC10558	620,648,650
Quad 2-Input Multiplexer (inverting)	MC10159	MC10559	620,648,650
8-Line Multiplexer	MC10164	MC10564	620,648,650
Quad 2-Input Multiplexer/Latch	MC10173	—	620,648
Dual 4 to 1 Multiplexer	MC10174	MC10574	620,648,650
Latches			
Quad (common clock)	MC10130	MC10530	620,648,650
Quad (negative transition)	MC10133	MC10533	620,648,650
Quad (positive transition)	MC10153	MC10553	620,648,650
Quad	MC10168	MC10568	620,648,650
Quint	MC10175	MC10575	620,648,650
Multivibrators			
Monostable Multivibrator	MC10198	—	620,648
Shift Registers			
Four-Bit Universal	MC10141	MC10541	620,648,650
Error Detection-Correction			
IBM Code	MC10163	MC10563	620,648,650
Motorola Code	MC10193	MC10593	620,648,650
Counters			
Universal Hexadecimal	MC10136	—	620,648
Universal Decade	MC10137	—	620,648
Binary	MC10154	—	620,648
Bi-Quinary	MC10138	MC10538	620,648,650
Binary	MC10178	MC10578	620,648,650

Function	Device Type		Case
	−30 to +85°C	−55 to +125°C	
Generator-Checker			
9 + 2-Bit Parity	MC10170	MC10570	620,648,650
Hex "D" Master-Slave/with Reset	MC10186	MC10586	620,648,650
Quad MST-to-MECL 10,000	MC10190	MC10590	620,648,650
Hex MECL 10,000-to-MST	MC10191	MC10591	620,648,650
Bus Transceiver			
Dual Simultaneous	MC10194	MC10594	620,648,650
Arithmetic Functions			
Look-Ahead Carry Block	MC10179	MC10579	620,648,650
Dual High Speed Adder/Subtractor	MC10180	MC10580	620,648,650
4-Bit Logic Unit/Function Generator	MC10181	MC10581	623,649,652
2-Bit Logic Unit/Function Generator	MC10182	MC10582	620,648,650
4 x 2 Multiplier	MC10183	—	623
2 x 1-Bit Array Multiplier, High Speed	MC10287	MC10687	620,648,650
Comparator			
5-Bit Magnitude	MC10166	MC10566	620,648,650
Memories			
16-Bit Multiport Register File (RAM) (8 x 2)	MCM10143	—	623
64-Bit Random Access (64 x 1)	MCM10148	—	620,650
64-Bit Register File (RAM) (16 x 4)	MCM10145	—	620,650
128-Bit Random Access (128 x 1)	MCM10147	—	620,650
256-Bit Random Access (256 x 1)	MCM10144	—	620,650
256-Bit Random Access (256 x 1)	MCM10152	—	620,650
1024-Bit Random Access (1024 x 1)	MCM10146	—	620,650
256-Bit Programmable Read Only (32 x 8)	MCM10139	—	620,650
1024-Bit Programmable Read Only (256 x 4)	MCM10149	—	620,650
1024-Bit Random Access (256 x 4)	MCM10422	—	652,748
4096-Bit Random Access (4K x 1)	MCM10470	—	726,747
4096-Bit Random Access (1K x 4) *	MCM10474	—	652,748

* To Be Introduced

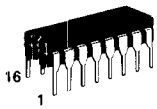

L SUFFIX
CERAMIC PACKAGE
CASE 620

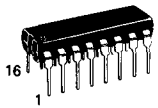

P SUFFIX
PLASTIC PACKAGE
CASE 648

Function	Device Type 0°C to +75°C	Case
NOR Gates		
Quad 2-Input NOR	MC10H102	620,648
Dual 3-Input 3-Output NOR	MC10H211	620,648
OR Gates		
Dual 3-Input 3-Output OR	MC10H210	620,648
AND Gates		
Quad 2-Input AND	MC10H104	620,648
Complex Gates		
Quad OR/NOR	MC10H101	620,648
Triple 2-3-2 Input OR/NOR	MC10H105	620,648
Triple Exclusive DR/NOR	MC10H107	620,648
Dual 4-5 Input DR/NOR	MC10H109	620,648
Dual 2-Wide OR-AND/OR-AND-Invert	MC10H117	620,648
Dual 2-Wide 3-Input OR-AND	MC10H118	620,648
4-Wide 4-3-3-3 Input OR-AND	MC10H119	620,648
4-Wide DR-AND/OR-AND-Invert	MC10H121	620,648
Receivers		
Triple Line Receiver	MC10H116	620,648
Flip-Flops		
Dual D Flip-Flop	MC10H131	620,648
Hex D Flip-Flop	MC10H176	620,648
Parity Checker		
12-Bit Parity Generator/Checker	MC10H160	620,648
Decoders		
Binary to 1-of-8 Decoder Low	MC10H161	620,648
Binary to 1-of-8 Decoder High	MC10H162	620,648
Data Selection/Multiplexers		
8-Line Multiplexer	MC10H164	620,648
Quad 2-Input Multiplexer/Latch	MC10H173	620,648
Dual 4-to-1 Multiplexer	MC10H174	620,648
Latches		
Dual Latch Common Clock	MC10H130	620,648
Quint Latch	MC10H175	620,648
Shift Register		
4-Bit Universal Shift Register	MC10H141	620,648
16 x 4 Bit Register File (RAM)	MC10H145	620,648
Counters		
Universal Hexadecimal Counter	MC10H136	620,648
Arithmetic Functions		
Look-Ahead Carry Block	MC10H179	620,648
Dual 2-Bit Adder/Subtractor	MC10H180	620,648
4-Bit ALU	MC10H181	620,648

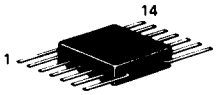

F SUFFIX
CERAMIC PACKAGE
CASE 607

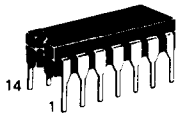

L SUFFIX
CERAMIC PACKAGE
CASE 632

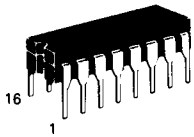

L SUFFIX
CERAMIC PACKAGE
CASE 620

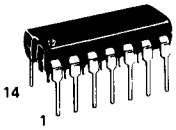

P SUFFIX
PLASTIC PACKAGE
CASE 646

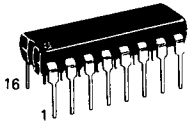

P SUFFIX
PLASTIC PACKAGE
CASE 648

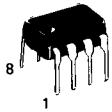

P SUFFIX
PLASTIC PACKAGE
CASE 626

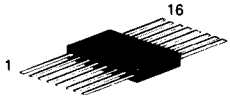

F SUFFIX
CERAMIC PACKAGE
CASE 650

Function	Device Type −30° to +85°C	Case
Gates		
Dual 4-Input OR/NOR	MC1660	620,650
Dual 4-5-Input OR/NOR	MC1688	620,650
Quad 2-Input NOR	MC1662	620,650
Triple 2-Input Exclusive NOR	MC1674	620,650
Quad 2-Input OR	MC1664	620,650
Triple 2-Input Exclusive OR	MC1672	620,650
Flip-Flops		
Dual Clocked R-S	MC1666	620,650
Dual Clocked Latch	MC1668	620,650
Master-Slave Type D	MC1670	620,650
UHF Prescaler Type D	MC1690	620,650
Counters		
Binary	MC1654	620
Bi-Quinary	MC1678	620
1 GHz Divide-by-Four	MC1699	620,650
Shift Register		
4-Bit Shift	MC1694	620
Multivibrator		
Voltage-Controlled	MC1658	620,648,650
Oscillator		
Emitter Coupled	MC1648	607,632,646
Comparator		
Dual A/D	MC1650/MC1651	620,650
Receiver		
Quad Line	MC1692	620,650
Prescaler		
1 GHz Divide-by-Four	MC1697	626

Components for Phase-Locked Loop Applications

Motorola offers the designer a choice of specially designed integrated circuits for performing phase-locked loop functions: phase detection, frequency division, filtering, and voltage-controlled signal generations. New MECL functions for phase-locked loop applications are now being characterized. In addition, supplementary circuits in TTL and linear technologies are available. The MC12000 ECL series circuits will operate at either +5.0 V or -5.2 V, and translators are included where needed so that all functions are TTL compatible.

The following functions are given in order of decreasing frequency within each category.

Function	Family	Frequency MHz typ	Power Dissipation mW typ/pkg	Type -55 to +125°C	Type 0 to +75°C	Case①
Combination Functions						
Digital Mixer Translator	MECL	250	470	—	MC12000	632, 646
Phase-Locked Loop	LINEAR	0.5	825	—	NE565C	646
Oscillators						
Crystal Oscillator	MECL	2.0 to 20	210	MC12561	MC12061	620, 648
Crystal Oscillator	MECL	0.1 to 2.0	175	MC12560	MC12060	620, 648
Voltage-Controlled Oscillator	MECL	225	150	MC1648M	MC1648#	607, 632, 646
Voltage-Controlled Multivibrator	MECL	150	150	—	MC1658#	620, 648, 650
Dual Voltage-Controlled Multivibrator	MTTL	30	150	MC4324	MC4024	607, 632, 646
Phase Detectors						
Digital						
Phase-Frequency Detector	MECL	70	520	MC12540	MC12040	607, 632, 646
Phase-Frequency Detector	MTTL	8.0	85	MC4344	MC4044	607, 632, 646
Analog						
Analog Mixer — Double Balanced	MECL	100	60	MC12502	MC12002#	632, 646
Modulator/Demodulator	LINEAR	10	575	MC1596	MC1496	603, 632, 646
Control Functions						
Counter Control Logic	MECL	25	150	MC12514	MC12014	620, 648
Prescalers						
High-Speed Prescaler (÷256/64)	MECL	950	350	—	MC12071**	646
÷4 Counter	MECL	1100	322	—	MC1697	626, 693
÷4 Counter	MECL	1100	322	—	MC1699#	620, 650
Two-Modulus Prescaler (÷5/÷6)	MECL	500	350	MC12509	MC12009	620, 648
Two-Modulus Prescaler (÷8/÷9)	MECL	550	350	MC12511	MC12011	620,648
Two-Modulus Prescaler (÷10/11)	MECL	600	350	MC12513	MC12013#	620, 648, 650
UHF Type D Prescaler (÷2)	MECL	500	—	—	MC1690#	620, 650
Two-Modulus Prescaler (÷32/33)	MECL	225	7.0 mA‡	—	MC12015§	626
Two-Modulus Prescaler (÷40/41)	MECL	225	7.0 mA‡	—	MC12016§	626
Two-Modulus Prescaler (÷64/65)	MECL	225	7.0 mA‡	—	MC12017§	626
Two-Modulus Prescaler (÷2, ÷5/6, ÷10/11, ÷10/12)	MECL	200	500	—	MC12012	620, 648
Dual Type D	LS TTL	45	20	SN54LS74	SN74LS74	717, 632, 646

① Plastic package available for commercial-temperature devices only.

* Operating Supply Current @ 10.24 MHz

** T_A = 0 to +70°C

§ T_A = -40 to +85°C

\# T_A = -30 to +85°C

‡ 7.0 mA @ 6.8 V = 47.6 mW

PLL FUNCTIONS (continued)

(In order of decreasing frequency within each category.)

Function	Family	Frequency MHz typ	Power Dissipation mW typ/pkg	Type -55 to +125°C	Type 0 to +75°C	Case ①
Counters						
Binary	MECL	325	750	—	MC1654#	620
Bi-Quinary (÷2, ÷5, ÷10)	MECL	325	750	—	MC1678#	620
Universal Hexadecimal (÷0-15)	MECL	150	625	—	MC10136#	620, 648
Universal Decade	MECL	150	625	—	MC10137#	620, 648, 650
Bi-Quinary	MECL	150	370	MC10538	MC10138#	620, 648, 650
Binary	MECL	150	370	MC10578	MC10178#	620, 648, 650
Presettable Binary (÷2, ÷8)	LS TTL	60	60	SN54LS197	SN74LS197	717, 632, 646
Presettable Decade (÷2, ÷5)	LS TTL	60	60	SN54LS196	SN74LS196	717, 632, 646
Presettable Up/Down Decade	LS TTL	40	95	SN54LS192	SN74LS192	620, 648, 650
Presettable Up/Down Binary	LS TTL	40	95	SN54LS193	SN74LS193	620, 648, 650
Presettable Decade	LS TTL	35	95	SN54LS160	SN74LS160	620, 648, 650
Presettable Binary	LS TTL	35	95	SN54LS161	SN74LS161	620, 648, 650
Presettable Decade	LS TTL	35	95	SN54LS162	SN74LS162	620, 648, 650
Presettable Binary	LS TTL	35	95	SN54LS163	SN74LS163	620, 648, 650
Presettable Up/Down Decade	LS TTL	35	95	SN54LS190	SN74LS190	620, 648, 650
Presettable Up/Down Binary	LS TTL	35	95	SN54LS191	SN74LS191	620, 648, 650
Decade (÷2, ÷5)	LS TTL	32**	45	SN54LS90	SN74LS90	717, 632, 646
Binary (÷2, ÷8)	LS TTL	32**	45	SN54LS93	SN74LS93	717, 632, 646
Universal (÷2-12 except 7 and 11)	MTTL	30	200	MC4323	MC4023	607, 632, 646
Programmable ÷N Decade (÷0-9)	MTTL	10	250	MC4316	MC4016	620, 648, 650
Two Programmable ÷N (÷0-1, ÷0-4)	MTTL	10	250	MC4317	MC4017	620, 648, 650
Programmable ÷N Hexadecimal (÷0-15)	MTTL	10	250	MC4318	MC4018	620, 648, 650
Two Programmable ÷N (÷0-3, ÷0-3)	MTTL	10	250	MC4319	MC4019	620, 648, 650

① Plastic package available for commercial-temperature devices only.

T_A = -30 to +85°C

**When using $\overline{CP}_O$

Package Styles

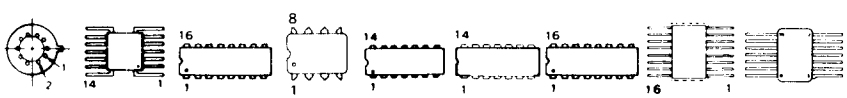

CASE		603	607	620	626	632	646	648	650	717
MATERIAL		Metal	Ceramic	Ceramic	Plastic	Ceramic	Plastic	Plastic	Ceramic	Ceramic
SUFFIX after type number	LS TTL	—	—	J	—	J	N	N	W	W
	Others	G	F	L	P	L	P	P	F	F

LS TTL 54LS00/74LS00

Integrated Circuits

The Low Power Schottky LS TTL family combines a current and power reduction by a factor of 5 (compared to 7400 TTL) with antisaturation Schottky diode clamping and advanced processing, using shallower diffusions and higher sheet resistivity to achieve circuit performance better than conventional TTL. All device types are available with "BETTER" Program screening.

SN54LS00 Series (-55 to +125°C)
SN74LS00 Series (0 to +70°C)

Function	Operating Temperature Range		Packages		
			Dual-In-Line		Flat
	-55°C to +125°C	0°C to +70°C	Plastic	Ceramic	Ceramic
AND Gates					
Quad 2-Input AND Gate	SN54LS08	SN74LS08	646	632	607
Quad 2-Input AND Gate, Open-Collector	SN54LS09	SN74LS09	646	632	607
Triple 3-Input AND Gate	SN54LS11	SN74LS11	646	632	607
Triple 3-Input Schmitt Trigger	SN54LS15	SN74LS15	646	632	607
Dual 4-Input AND Gate	SN54LS21	SN74LS21	646	632	607
NAND Gates					
Hex Inverter	SN54LS04	SN74LS04	646	632	607
Hex Inverter, Open-Collector	SN54LS05	SN74LS05	646	632	607
Hex Schmitt Trigger	SN54LS14	SN74LS14	646	632	607
Quad 2-Input NAND Gate	SN54LS00	SN74LS00	646	632	607
Quad 2-Input NAND Gate, Open-Collector	SN54LS01	SN74LS01	646	632	607
Quad 2-Input NAND Gate, Open-Collector	SN54LS03	SN74LS03	646	632	607
Quad 2-Input NAND Gate, High-Voltage	SN54LS26	SN74LS26	646	632	607
Quad 2-Input NAND Buffer	SN54LS37	SN74LS37	646	632	607
Quad 2-Input NAND Buffer, Open-Collector	SN54LS38	SN74LS38	648	620	650
Quad 2-Input Schmitt Trigger	SN54LS132	SN74LS132	646	632	607
13-Input NAND Gate	SN54LS133	SN74LS133	648	620	650
Triple 3-Input NAND Gate	SN54LS10	SN74LS10	646	632	607
Triple 3-Input NAND Gate, Open-Collector	SN54LS12	SN74LS12	646	632	607
Dual 4-Input Schmitt Trigger	SN54LS13	SN74LS13	646	632	607
Dual 4-Input NAND Gate	SN54LS20	SN74LS20	646	632	607
Dual 4-Input NAND Gate, Open-Collector	SN54LS22	SN74LS22	646	632	607
Dual 4-Input NAND Buffer	SN54LS40	SN74LS40	646	632	607
8-Input NAND Gate	SN54LS30	SN74LS30	646	632	607
Quad Buffer, Low Enable, 3-State	SN54LS125A	SN74LS125A	646	632	607
Quad Buffer, High Enable, 3-State	SN54LS126A	SN74LS126A	646	632	607
Hex Buffer, Common Enable, 3-State	SN54LS365A	SN74LS365A	648	620	650
Hex Buffer, 4-Bit and 2-Bit, 3-State	SN54LS367A	SN74LS367A	648	620	650
Hex Inverter, Common Enable, 3-State	SN54LS366A	SN74LS366A	648	620	650
Hex Inverter, 4-Bit and 2-Bit, 3-State	SN54LS368A	SN74LS368A	648	620	650
OR Gates					
Quad 2-Input OR Gate	SN54LS32	SN74LS32	646	632	607
NOR Gates					
Quad 2-Input NOR Gate	SN54LS02	SN74LS02	646	632	607
Quad 2-Input NOR Buffer	SN54LS28	SN74LS28	646	632	607
Quad 2-Input NOR Buffer, Open-Collector	SN54LS33	SN74LS33	646	632	607
Dual 5-Input NOR Gate	SN54LS260	SN74LS260	646	632	607
Triple 3-Input NOR Gate	SN54LS27	SN74LS27	646	632	607
Exclusive OR Gates					
Quad Exclusive OR Gate	SN54LS86	SN74LS86	646	632	607
2-Input Quad/Exclusive OR Gate	SN54LS386	SN74LS386	646	632	607
Quad Exclusive OR Gate, Open-Collector	SN54LS136	SN74LS136	646	632	607

Function	Operating Temperature Range		Packages		
			Dual-In-Line		Flat
	-55°C to +125°C	0°C to +70°C	Plastic	Ceramic	Ceramic
Exclusive NOR Gate					
Quad Exclusive NOR Gate, Open-Collector	SN54LS266	SN74LS266	646	632	607
AND-OR-INVERT Gates					
Dual AND-OR-INVERT Gate	SN54LS51	SN74LS51	646	632	607
2-3-3-2 Input AND-OR-INVERT Gate	SN54LS54	SN74LS54	646	632	607
2-Wide 4-Input AND-OR-INVERT Gate	SN54LS55	SN74LS55	646	632	607
Flip-Flops					
Dual JK Flip-Flop	SN54LS73A	SN74LS73A	646	632	607
Dual D Flip-Flop	SN54LS74A	SN74LS74A	646	632	607
Dual JK Flip-Flop	SN54LS76A	SN74LS76A	648	620	650
Dual JK Flip-Flop with Preset	SN54LS78A	SN74LS78A	646	632	607
Dual JK Flip-Flop with Preset	SN54LS109A	SN74LS109A	648	620	650
Dual JK Flip-Flop with Clear	SN54LS107A	SN74LS107A	646	632	607
Dual JK Edge-Triggered Flip-Flop	SN54LS112A	SN74LS112A	648	620	650
Dual JK Edge-Triggered Flip-Flop	SN54LS113A	SN74LS113A	646	632	607
Dual JK Edge-Triggered Flip-Flop	SN54LS114A	SN74LS114A	646	632	607
Hex D Flip-Flop with Clear	SN54LS174	SN74LS174	648	620	650
Hex D Flip-Flop with Enable	SN54LS378	SN74LS378	648	620	650
Quad D Flip-Flop with Clear	SN54LS175	SN74LS175	648	620	650
Octal D Flip-Flop with Clear	SN54LS273	SN74LS273	738	732	737
Octal D Flip-Flop, 3-State	SN54LS374	SN74LS374	738	732	737
Octal D Flip-Flop with Enable	SN54LS377	SN74LS377	738	732	737
4-Bit D Flip-Flop with Enable	SN54LS379	SN74LS379	648	620	650
Latches					
4-Bit Bi-Stable Latch with Q and $\overline{Q}$	SN54LS75	SN74LS75	648	620	650
4-Bit Bi-Stable Latch	SN54LS77	SN74LS77	646	632	607
Octal Transparent Latch, 3-State	SN54LS373	SN74LS373	738	732	737
Quad Latch	SN54LS375	SN74LS375	648	620	650
Quad Set/Reset Latch	SN54LS279	SN74LS279	648	620	650
8-Bit Addressable Latch (9334)	SN54LS259	SN74LS259	648	620	650
Dual 4-Bit Addressable Latch	SN54LS256	SN74LS256	648	620	650
Register Files					
4 x 4 Register File, Open-Collector	SN54LS170	SN74LS170	648	620	650
4 x 4 Register File, 3-State	SN54LS670	SN74LS670	648	620	650
Shift Registers					
8-Bit Serial-In/Parallel-Out Shift Register	SN54LS164	SN74LS164	646	632	607
8-Bit Parallel-In/Serial-Dut Shift Register	SN54LS165	SN74LS165	648	620	650
8-Bit Shift Register Serial-In/Serial-Out	SN54LS91	SN74LS91	646	632	607
4-Bit Shift Register	SN54LS95B	SN74LS95B	646	632	607
8-Bit Parallel-In/Serial-Out Shift Register	SN54LS166	SN74LS166	648	620	650
4-Bit Shift Register (9300 Type)	SN54LS195A	SN74LS195A	648	620	650
4-Bit Right/Left Shift Register	SN54LS194A	SN74LS194A	648	620	650
4-Bit Shift Register, 3-State	SN54LS295A	SN74LS295A	646	632	607
8-Bit Shift/Storage Register, 3-State	SN54LS299	SN74LS299	738	732	737
8-Bit Shift Register with Sign Extend, 3-State	SN54LS322	SN74LS322	738	732	737
8-Bit Shift/Storage Register, 3-State	SN54LS323	SN74LS323	738	732	737
4-Bit Shift Register, 3-State	SN54LS395	SN74LS395	648	620	650
16-Bit Serial-In/Serial-Out Shift Register, 3-State*	SN54LS673	SN74LS673	649	623	652
16-Bit Parallel-In/Serial-Out Shift Register, 3-State*	SN54LS674	SN74LS674	649	623	652
Other Registers					
4-Bit D Register, 3-State	SN54LS173	SN74LS173	648	620	650
8-Bit Shift/Storage Register, 3-State	SN54LS299	SN74LS299	738	732	737
Quad 2-Input Multiplexer with Output Register	SN54LS398	SN74LS398	738	732	737
Quad 2-Input Multiplexer with Dutput Register	SN54LS399	SN74LS399	648	620	650

* To be introduced.

Function	Operating Temperature Range		Packages		
			Dual-In-Line		Flat
	-55°C to +125°C	0°C to +70°C	Plastic	Ceramic	Ceramic
Counters					
Decade Counter	SN54LS90	SN74LS90	646	632	607
Divide-By-12 Counter	SN54LS92	SN74LS92	646	632	607
4-Bit Binary Counter	SN54LS93	SN74LS93	646	632	607
Decade Counter, Asynchronously Presettable	SN54LS196	SN74LS196	646	632	607
4-Bit Binary Counter, Asynchronously Presettable	SN54LS197	SN74LS197	646	632	607
BCD Decade Counter, Asynchronous Reset (9310 Type)	SN54LS160A	SN74LS160A	648	620	650
4-Bit Binary Counter, Asynchronous Reset (9316 Type)	SN54LS161A	SN74LS161A	648	620	650
BCD Decade Counter, Synchronous Reset	SN54LS162A	SN74LS162A	648	620	650
4-Bit Binary Counter, Synchronous Reset	SN54LS163A	SN74LS163A	648	620	650
Up/Down Decade Counter with Clear	SN54LS192	SN74LS192	648	620	650
Up/Down Binary Counter with Clear	SN54LS193	SN74LS193	648	620	650
Up/Down Decade Counter	SN54LS190	SN74LS190	648	620	650
Up/Down Binary Counter	SN54LS191	SN74LS191	648	620	650
Decade Counter (Divide By 2 and 5)	SN54LS290	SN74LS290	646	632	607
4-Bit Binary Counter	SN54LS293	SN74LS293	646	632	607
Dual Decade Counter	SN54LS390	SN74LS390	648	632	607
Dual 4-Bit Binary Counter	SN54LS393	SN74LS393	646	632	607
Dual Decade Counter	SN54LS490	SN74LS490	648	632	607
Decade Up/Down Counter, 3-State	SN54LS568	SN74LS568	738	732	737
Binary Up/Down Counter, 3-State	SN54LS569	SN74LS569	738	732	737
Synchronous 4-Bit Up/Down Decade Counter	SN54LS668	SN74LS668	738	732	737
Synchronous 4-Bit Up/Down Binary Counter	SN54LS669	SN74LS669	738	732	737
Up/Down Decade Counter	SN54LS168	SN74LS168	648	620	650
Up/Down Binary Counter	SN54LS169	SN74LS169	648	620	650
Programmable Decade Counter (MC4016)	SN54LS716	SN74LS716	648	620	650
Programmable Binary Counter (MC4018)	SN54LS718	SN74LS718	648	620	650
Multiplexers/Data Selectors					
Quad 2-Input Multiplexer, Noninverting	SN54LS157	SN74LS157	648	620	650
Quad 2-Input Multiplexer, Inverting	SN54LS158	SN74LS158	648	620	650
Quad 2-Input Multiplexer, Noninverting, 3-State	SN54LS257A	SN74LS257A	648	620	650
Quad 2-Input Multiplexer, Inverting, 3-State	SN54LS258A	SN74LS258A	648	620	650
Quad 2-Multiplexer, with Output Register	SN54LS298	SN74LS298	648	620	650
Dual 4-Input Multiplexer	SN54LS153	SN74LS153	648	620	650
Dual 4-Input Multiplexer, 3-State	SN54LS253	SN74LS253	648	620	650
8-Input Multiplexer	SN54LS151	SN74LS151	648	620	650
8-Input Multiplexer, 3-State	SN54LS251	SN74LS251	648	620	650
Dual 4-Multiplexer (Inverting LS153)	SN54LS352	SN74LS352	648	620	650
Dual 4-Multiplexer (3-State LS352)	SN54LS353	SN74LS353	648	620	650
Quad 2-Input Multiplexer with Output Register	SN54LS398	SN74LS398	738	732	737
Quad 2-Input Multiplexer with Output Register	SN54LS399	SN74LS399	648	620	650
16-to-8 Multiplexer, 3-State*	SN54LS604	SN74LS604	710	733	—
16-to-8 Multiplexer, 3-State*	SN54LS606	SN74LS606	710	733	—
16-to-8 Multiplexer, Open-Collector*	SN54LS605	SN74LS605	710	733	—
16-to-8 Multiplexer, Open-Collector*	SN54LS607	SN74LS607	710	733	—
Synchronous Address Multiplexer (MC6883)	—	SN74LS783	711	734	—
Decoders/Demultiplexers					
Dual 1-of-4 Decoder/Demultiplexer	SN54LS139	SN74LS139	648	620	650
Dual 1-of-4 Decoder	SN54LS155	SN74LS155	648	620	650
Dual 1-of-4 Decoder, Open-Collector	SN54LS156	SN74LS156	648	620	650
8-Bit Addressable Latch (9334)	SN54LS259	SN74LS259	648	620	650
1-of-10 Decoder	SN54LS42	SN74LS42	648	620	650
1-of-10 Decoder/Driver, Open-Collector	SN54LS145	SN74LS145	648	620	650
1-of-8 Decoder/Demultiplexer	SN54LS138	SN74LS138	648	620	650
3-Line to 8-Line Decoder/Demultiplexer	SN54LS137	SN74LS137	648	620	650

* To be introduced.

Function	Operating Temperature Range		Packages		
			Dual-In-Line		Flat-Ceramic
	-55°C to +125°C	0°C to +70°C	Plastic	Ceramic	
Priority Encoders					
10-Line Decimal to 4-Line Priority Encoder	SN54LS147	SN74LS147	648	620	650
8-Input to 3-Line Priority Encoder	SN54LS148	SN74LS148	648	620	650
8-Input to 3-Line Priority Encoder, 3-State	SN54LS348	SN74LS348	648	620	650
Arithmetic Operators					
4-Bit Full Adder	SN54LS83A	SN74LS83A	648	620	650
4-Bit Full Adder (Rotated LS83A)	SN54LS283	SN74LS283	648	620	650
4-Bit ALU	SN54LS181	SN74LS181	649	623	652
Quad 4-Bit Adder/Subtractor	SN54LS385	SN74LS385	738	732	737
Look Ahead Carry Generator	SN54LS182	SN74LS182	648	620	650
Dual Carry/Save Full Adder	SN54LS183	SN74LS183	646	632	607
Comparators					
4-Bit Magnitude Comparator	SN54LS85	SN74LS85	648	620	650
8-Bit Magnitude Comparator, 3-State*	SN54LS682	SN74LS682	738	732	737
8-Bit Magnitude Comparator, 3-State*	SN54LS684	SN74LS684	738	732	737
8-Bit Magnitude Comparator, 3-State*	SN54LS688	SN74LS688	738	732	737
8-Bit Magnitude Comparator, Open-Collector*	SN54LS683	SN74LS683	738	732	737
8-Bit Magnitude Comparator, Open-Collector*	SN54LS685	SN74LS685	738	732	737
8-Bit Magnitude Comparator, Open-Collector*	SN54LS689	SN74LS689	738	732	737
8-Bit Magnitude Comparator with Enable*	SN54LS686	SN74LS686	649	623	652
8-Bit Magnitude Comparator with Enable*	SN54LS687	SN74LS687	649	623	652
Parity Generators/Checkers					
9-Bit Odd/Even Parity Generator/Checker	SN54LS280	SN74LS280	646	632	607
Monstable Multivibrators					
Retriggerable Monostable Multivibrator	SN54LS122	SN74LS122	646	632	607
Dual Retriggerable Monostable Multivibrator	SN54LS123	SN74LS123	648	620	650
Dual One-Shot (Very Stable)	SN54LS221	SN74LS221	648	620	650
Display Decoder/Drivers (BCD to Seven Segment)					
BCD to 7-Segment Decoder/Driver, Open-Collector	SN54LS47	SN74LS47	648	620	650
BCD to 7-Segment Decoder/Driver with Pull-Ups	SN54LS48	SN74LS48	648	620	650
BCD to 7-Segment Decoder/Driver, Open-Collector	SN54LS49	SN74LS49	646	632	607
BCD to 7-Segment Decoder/Driver, Open-Collector	SN54LS247	SN74LS247	648	620	650
BCD to 7-Segment Decoder/Driver with Pull-Ups	SN54LS248	SN74LS248	648	620	650
BCD to 7-Segment Decoder/Driver, Open-Collector	SN54LS249	SN74LS249	648	620	650
Bus-Oriented 3-State Circuits					
Quad Buffer, Low Enable, 3-State	SN54LS125A	SN74LS125A	646	632	607
Quad Buffer, High Enable, 3-State	SN54LS126A	SN74LS126A	646	632	607
Octal Bus/Line Driver, Inverting, 3-State	SN54LS240	SN74LS240	738	732	737
Octal Bus/Line Driver, 3-State	SN54LS241	SN74LS241	738	732	737
Quad Bus Transceiver, Inverting, 3-State	SN54LS242	SN74LS242	646	632	607
Quad Bus Transceiver, Noninverting, 3-State	SN54LS243	SN74LS243	646	632	607
Octal Driver, Noninverting, 3-State	SN54LS244	SN74LS244	738	732	737
Octal Bus Transceiver, Noninverting, 3-State	SN54LS245	SN74LS245	738	732	737
Hex Buffer, Common Enable, 3-State	SN54LS365A	SN74LS365A	648	620	650
Hex Inverter, Common Enable, 3-State	SN54LS366A	SN74LS366A	648	620	650
Hex Buffer, 4-Bit and 2-Bit, 3-State	SN54LS367A	SN74LS367A	648	620	650
Hex Inverter, 4-Bit and 2-Bit, 3-State	SN54LS368A	SN74LS368A	648	620	650
Octal Buffer (81LS95), 3-State	SN54LS795	SN74LS795	738	732	737
Octal Buffer (81LS96), 3-State	SN54LS796	SN74LS796	738	732	737
Octal Buffer (81LS97), 3-State	SN54LS797	SN74LS797	738	732	737
Octal Buffer (81LS98), 3-State	SN54LS798	SN74LS798	738	732	737
Octal Buffer/Line Driver, 3-State	SN54LS540	SN74LS540	738	732	737
Octal Buffer/Line Driver, 3-State	SN54LS541	SN74LS541	738	732	737
Octal Bus Transceiver, Inverting, 3-State	SN54LS640	SN74LS640	738	732	737
Octal Bus Transceiver, True, Inverting, 3-State	SN54LS643	SN74LS643	738	732	737
Octal Bus Transceiver, Noninverting, 3-State	SN54LS645	SN74LS645	738	732	737
Octal Transceiver with Storage, 3-State	SN54LS620	SN74LS620	738	732	737
Octal Transceiver with Storage, 3-State	SN54LS623	SN74LS623	738	732	737

* To be introduced.

Function	Operating Temperature Range		Packages		
			Dual-In-Line		Flat
	-55°C to +125°C	0°C to +70°C	Plastic	Ceramic	Ceramic
Open-Collector Bus Transceivers					
Octal Bus Transceiver, Noninverting, Open-Collector	SN54LS641	SN74LS641	738	732	737
Octal Bus Transceiver, Inverting, Open-Collector	SN54LS642	SN74LS642	738	732	737
Octal Bus Transceiver, True, Inverting, Open-Collector	SN54LS644	SN74LS644	738	732	737
Octal Transceiver with Storage, Open-Collector	SN54LS621	SN74LS621	738	732	737
Octal Transceiver with Storage, Open-Collector	SN54LS622	SN74LS622	738	732	737

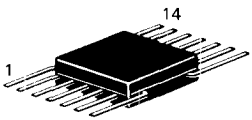

W SUFFIX
CERAMIC PACKAGE
CASE 607

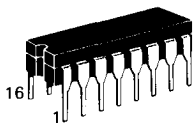

J SUFFIX
CERAMIC PACKAGE
CASE 620

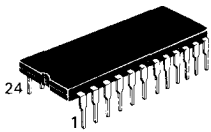

J SUFFIX
CERAMIC PACKAGE
CASE 623

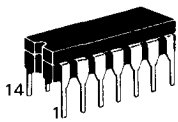

J SUFFIX
CERAMIC PACKAGE
CASE 632

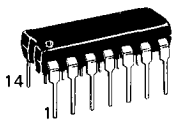

N SUFFIX
PLASTIC PACKAGE
CASE 646

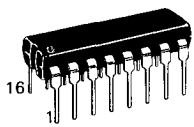

N SUFFIX
PLASTIC PACKAGE
CASE 648

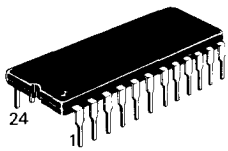

N SUFFIX
PLASTIC PACKAGE
CASE 649

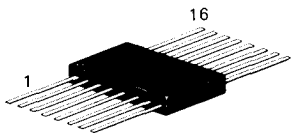

W SUFFIX
CERAMIC PACKAGE
CASE 650

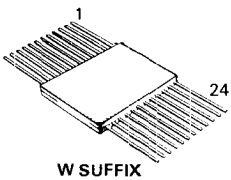

W SUFFIX
CERAMIC PACKAGE
CASE 652

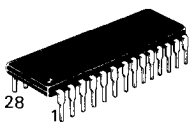

N SUFFIX
PLASTIC PACKAGE
CASE 710

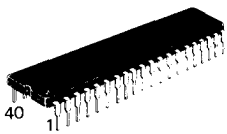

N SUFFIX
PLASTIC PACKAGE
CASE 711

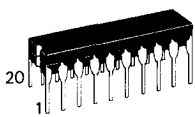

J SUFFIX
CERAMIC PACKAGE
CASE 732

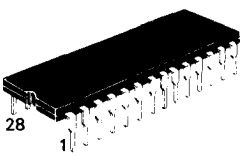

J SUFFIX
CERAMIC PACKAGE
CASE 733

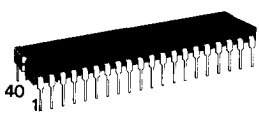

J SUFFIX
CERAMIC PACKAGE
CASE 734

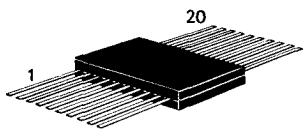

W SUFFIX
CERAMIC PACKAGE
CASE 737

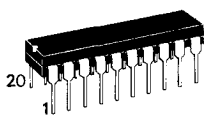

N SUFFIX
PLASTIC PACKAGE
CASE 738

ALS TTL 54ALS00/74ALS00
Integrated Circuits

The Advanced Low Power Schottky TTL family (ALS TTL) provides a 50% power reduction compared to standard 54/74LS TTL and yet offers improved circuit performance over the standard LS due to Motorola's state-of-the-art oxide isolated process (MOSAIC). This is a new product line; contact your Motorola representative for complete details and current introduction status.

SN54ALS00 Series (-55 to +125°C)
SN74ALS00 Series (0 to +70°C)

Function	Operating Temperature Range		Packages		
			Dual-In-Line		Flat
	-55°C to +125°C	0°C to +70°C	Plastic	Ceramic	Ceramic
AND Gates					
Quad 2-Input AND Gate	SN54ALS08	SN74ALS08	646	632	607
NAND Gates					
Hex Inverter	SN54ALS04	SN74ALS04	646	632	607
Quad 2-Input NAND Gate	SN54ALS00	SN74ALS00	646	632	607
OR Gates					
Quad 2-Input DR Gate	SN54ALS32	SN74ALS32	646	632	607
NOR Gates					
Quad 2-Input NDR Gate	SN54ALS02	SN74ALS02	646	632	607
Flip-Flops					
Dual D Flip-Flop	SN54ALS74	SN74ALS74	646	632	607
Dual JK Flip-Flop with Preset	SN54ALS109	SN74ALS109	648	620	650
Octal D Flip-Flop with Clear	SN54ALS273	SN74ALS273	738	732	737
Octal D Flip-Flop, 3-State	SN54ALS374	SN74ALS374	738	732	737
Octal D Flip-Flop, 3-State	SN54ALS574	SN74ALS574	738	732	737
Octal D Flip-Flop with Enable	SN54ALS377	SN74ALS377	738	732	737
Octal D Flip-Flop, Inverting, 3-State	SN54ALS576	SN74ALS576	738	732	737
Octal D Flip-Flop	SN54ALS874	SN74ALS874	649	623	652
Octal D Flip-Flop, Inverting	SN54ALS876	SN74ALS876	649	623	652
Latches					
Octal Transparent Latch, 3-State	SN54ALS373	SN74ALS373	738	732	737
Octal Transparent Latch, 3-State	SN54ALS573	SN74ALS573	738	732	737
Octal Transparent Latch, Inverting, 3-State	SN54ALS580	SN74ALS580	738	732	737
Octal Transparent Latch	SN54ALS873	SN74ALS873	649	623	652
Octal Transparent Latch, Inverting	SN54ALS880	SN74ALS880	649	623	652
Counters/Multiplexers					
BCD Decade Counter, Asynchronous Reset (9310 Type)	SN54ALS160	SN74ALS160	648	620	650
4-Bit Binary Counter, Asynchronous Reset (9316 Type)	SN54ALS161	SN74ALS161	648	620	650
BCD Decade Counter, Synchronous Reset	SN54ALS162	SN74ALS162	648	620	650
4-Bit Binary Counter, Synchronous Reset	SN54ALS163	SN74ALS163	648	620	650
Decade Counter/Latch/Multiplexer, Asynchronous Reset, 3-State	SN54ALS690	SN74ALS690	738	732	737
Binary Counter/Latch/Multiplexer, Asynchronous Reset, 3-State	SN54ALS691	SN74ALS691	738	732	737
Decade Counter/Latch/Multiplexer, Synchronous Reset, 3-State	SN54ALS692	SN74ALS692	738	732	737
Binary Counter/Latch/Multiplexer, Synchronous Reset, 3-State	SN54ALS693	SN74ALS693	738	732	737
Decade Counter/Register/Multiplexer, 3-State	SN54ALS696	SN74ALS696	738	732	737
Binary Counter/Register/Multiplexer, 3-State	SN54ALS697	SN74ALS697	738	732	737
Decade Counter/Register/Multiplexer, 3-State	SN54ALS698	SN74ALS698	738	732	737
Binary Counter/Register/Multiplexer, 3-State	SN54ALS699	SN74ALS699	738	732	737

Function	Operating Temperature Range		Packages		
			Dual-In-Line		Flat
	-55°C to +125°C	0°C to +70°C	Plastic	Ceramic	Ceramic
Open-Collector Bus Transceivers					
Octal Bus Transceiver, Noninverting, Open-Collector	SN54ALS641	SN74ALS641	738	732	737
Octal Bus Transceiver, Inverting, Open-Collector	SN54ALS642	SN74ALS642	738	732	737
Octal Bus Transceiver, True, Inverting, Open-Collector	SN54ALS644	SN74ALS644	738	732	737
Octal Transceiver with Storage, Open-Collector	SN54ALS621	SN74ALS621	738	732	737
Octal Transceiver with Storage, Open-Collector	SN54ALS622	SN74ALS622	738	732	737
Octal Transceiver/Latch/Multiplexer, Noninverting, Open-Collector	SN54ALS647	SN74ALS647	649	623	652
Octal Transceiver/Latch/Multiplexer, Inverting, Open-Collector	SN54ALS649	SN74ALS649	649	623	652
Bus-Oriented 3-State Circuits					
Octal Bus/Line Driver, Inverting, 3-State	SN54ALS240	SN74ALS240	738	732	737
Octal Bus/Line Driver, 3-State	SN54ALS241	SN74ALS241	738	732	737
Quad Bus Transceiver, Inverting, 3-State	SN54ALS242	SN74ALS242	646	632	607
Quad Bus Transceiver, Noninverting, 3-State	SN54ALS243	SN74ALS243	646	632	607
Octal Driver, Noninverting, 3-State	SN54ALS244	SN74ALS244	738	732	737
Octal Bus Transceiver, Noninverting, 3-State	SN54ALS245	SN74ALS245	738	732	737
Octal Bus Transceiver, Inverting, 3-State	SN54ALS640	SN74ALS640	738	732	737
Octal Bus Transceiver, True, Inverting, 3-State	SN54ALS643	SN74ALS643	738	732	737
Octal Transceiver with Storage, 3-State	SN54ALS620	SN74ALS620	738	732	737
Octal Transceiver with Storage, 3-State	SN54ALS623	SN74ALS623	738	732	737
Octal Transceiver/Latch/Multiplexer, Noninverting, 3-State	SN54ALS646	SN74ALS646	649	623	652
Octal Transceiver/Latch/Multiplexer, Inverting, 3-State	SN54ALS648	SN74ALS648	649	623	652

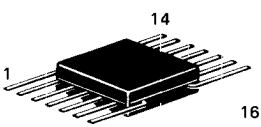

W SUFFIX
CERAMIC PACKAGE
CASE 607

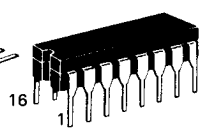

J SUFFIX
CERAMIC PACKAGE
CASE 620

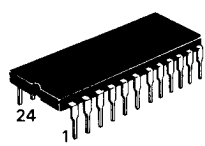

J SUFFIX
CERAMIC PACKAGE
CASE 623

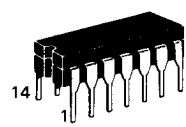

J SUFFIX
CERAMIC PACKAGE
CASE 632

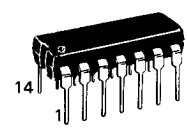

N SUFFIX
PLASTIC PACKAGE
CASE 646

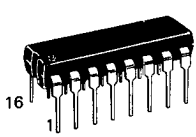

N SUFFIX
PLASTIC PACKAGE
CASE 648

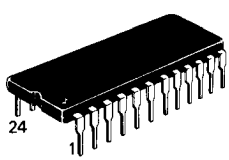

N SUFFIX
PLASTIC PACKAGE
CASE 649

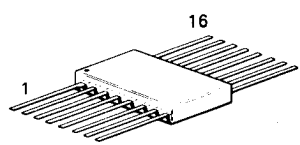

W SUFFIX
CERAMIC PACKAGE
CASE 650

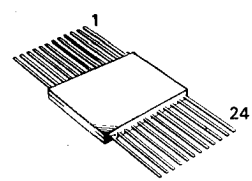

W SUFFIX
CERAMIC PACKAGE
CASE 652

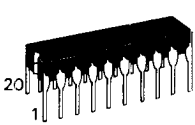

J SUFFIX
CERAMIC PACKAGE
CASE 732

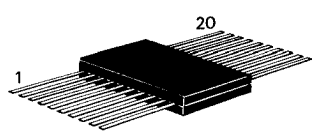

W SUFFIX
CERAMIC PACKAGE
CASE 737

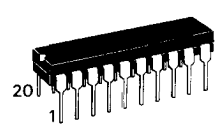

N SUFFIX
PLASTIC PACKAGE
CASE 738

FAST TTL 54F00/74F00

Integrated Circuits

The FAST Schottky TTL family provides a 75-80% power reduction compared to standard Schottky (54/74S) TTL and yet offers a 20-40% improvement in circuit performance over the standard Schottky due to Motorola's state-of-the-art oxide isolated process (MOSAIC). This is a new product line, contact your Motorola representative for complete details and current introduction status.

MC54F00 Series (-55 to +125°C)
MC74F00 Series (0 to +70°C)

Function	Operating Temperature Range		Packages		
			Dual-In-Line		Flat
	-55°C to +125°C	0°C to +70°C	Plastic	Ceramic	Ceramic
AND Gates					
Quad 2-Input AND Gate	MC54F08	MC74F08	646	632	607
Triple 3-Input AND Gate	MC54F11	MC74F11	646	632	607
NAND Gates					
Hex Inverter	MC54F04	MC74F04	646	632	607
Quad 2-Input NAND Gate	MC54F00	MC74F00	646	632	607
Triple 3-Input NAND Gate	MC54F10	MC74F10	646	632	607
Dual 4-Input NAND Gate	MC54F20	MC74F20	646	632	607
OR Gates					
Quad 2-Input OR Gate	MC54F32	MC74F32	646	632	607
NOR Gates					
Quad 2-Input NOR Gate	MC54F02	MC74F02	646	632	607
Flip-Flops					
Dual D Flip-Flop	MC54F74	MC74F74	646	632	607
Dual JK Flip-Flop with Preset	MC54F109	MC74F109	648	620	650
Octal D Flip-Flop, 3-State	MC54F374	MC74F374	738	732	737
Octal D Flip-Flop, 3-State	MC54F534	MC74F534	738	732	737
Latches					
Octal Transparent Latch, 3-State	MC54F373	MC74F373	738	732	737
Octal Transparent Latch, 3-State	MC54F533	MC74F533	738	732	737
Decoder/Demultiplexers					
Dual 1-of-4 Decoder/Demultiplexer	MC54F139	MC74F139	648	620	650
1-of-8 Decoder/Demultiplexer	MC54F138	MC74F138	648	620	650
Bus-Oriented 3-State Circuits					
Octal Bus/Line Driver, Inverting, 3-State	MC54F240	MC74F240	738	732	737
Octal Bus/Line Driver, 3-State	MC54F241	MC74F241	738	732	737
Quad Bus Transceiver, Inverting, 3-State	MC54F242	MC74F242	646	632	607
Quad Bus Transceiver, Noninverting, 3-State	MC54F243	MC74F243	646	632	607
Octal Driver, Noninverting, 3-State	MC54F244	MC74F244	738	732	737

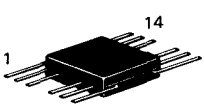

W SUFFIX
CERAMIC PACKAGE
CASE 607

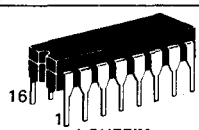

J SUFFIX
CERAMIC PACKAGE
CASE 620

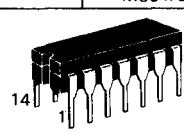

J SUFFIX
CERAMIC PACKAGE
CASE 632

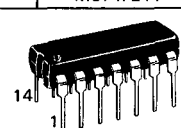

N SUFFIX
PLASTIC PACKAGE
CASE 646

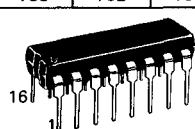

N SUFFIX
PLASTIC PACKAGE
CASE 648

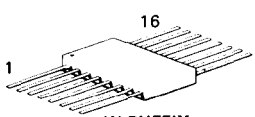

W SUFFIX
CERAMIC PACKAGE
CASE 650

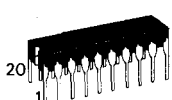

J SUFFIX
CERAMIC PACKAGE
CASE 732

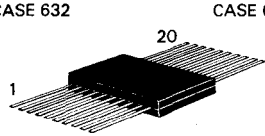

W SUFFIX
CERAMIC PACKAGE
CASE 737

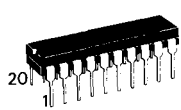

N SUFFIX
PLASTIC PACKAGE
CASE 738

MTTL Complex Functions

Integrated Circuits

MC4000 Series (0 to +75°C)
MC4300 Series (−55 to +125°C)

The MTTL complex functions are designed for digital applications in the medium to high-speed range.

These MTTL devices provide significant reduction in package count and increased logic per function over devices in the basic MTTL and MDTL families.

Functions and Characteristics (V_{CC} = 5.0 V, T_A = 25°C)

All devices shown can be used with all MTTL and MDTL devices; however, the loading factors shown reflect use with other devices in the same MC-number series unless otherwise noted.

Function	Operating Range		Case	Output Loading Factor Each Output	Propagation Delay t_{pd} ns typ	Power Dissipation P_D mW typ/pkg
	−55 to +125°C	0 to +75°C				
Dual 4-Channel Data Selector	MC4300F,L	MC4000L,P	607,632,646	10	Control Line = 18 Data Line = 11	150
BCD-to-Binary/Binary-to-BCD Number Converter		MC4001L,P	650,620,648	Open-Collector I_{OL} = 16 mA	Address Time <45 ns	300
Dual Data Distributor	MC4302F,L	MC4002L,P	607,632,646	10	10.5	175
Binary to One-of-Eight Line Decoder	MC4306F,L	MC4006L,P	607,632,646	10	14	100
Dual Binary to One-of-Four Line Decoder	MC4307F,L	MC4007L,P	650,620,648	10	14	125
8-Bit Parity Tree	MC4308F,L	MC4008L,P	607,632,646	10	15 to 30	150
Dual 4-Bit Parity Tree	MC4310F,L	MC4010L,P	607,632,646	10	9.5 to 22	125
4-Bit Shift Register	MC4312F,L	MC4012L,P	607,632,646	10	22/bit	180
Quad Type D Flip-Flop	MC4315F,L	MC4015L,P	650,620,648	10	16	190
Programmable Modulo-N Decade Counter	MC4316F,L	MC4016L,P	650,620,648	8	Clock to Q3 = 50 Clock to Bus = 35	250
Programmable Modulo 2, Modulo 5 Counters	MC4317F,L	MC4017L,P	650,620,648	8	Clock to Q3 = 50 Clock to Bus = 35	250
Programmable Modulo-N Hexadecimal Counter	MC4318F,L	MC4018L,P	650,620,648	8	Clock to Q3 = 50 Clock to Bus = 35	250
Dual Programmable Modulo 4 Counters	MC4319F,L	MC4019L,P	650,620,648	8	Clock to Q3 = 50 Clock to Bus = 35	250
Dual 4-Bit Comparator (Open-Collector)	MC4321F,L	MC4021L,P	650,620,648	10	20	250
Dual 4-Bit Comparator	MC4322F,L	MC4022L,P	650,620,648	10	20	250
4-Bit Universal Counter	MC4323F,L	MC4023L,P	607,632,646	10	16/bit	200
Dual Voltage Controlled Multivibrator	MC4324F,L	MC4024L,P	607,632,646	7	f_{max} = 30 MHz	150

MTTL MC4300/4000 SERIES (continued)

Function	−55 to +125°C	0 to +75°C	Case	Output Loading Factor Each Output	Propagation Delay t_{pd} ns typ	Power Dissipation P_D mW typ/pkg
Inverting/Noninverting One-of-Eight Decoder	—	MC4038L,P	650,620,648	Open-Collector I_{OL} = 20 mA	Address Time <45 ns	240
Seven Segment Character Generator	—	MC4039L,P	650,620,648			240
Binary to Two-of-Eight Decoder	—	MC4040L,P	650,620,648			200
Single-Error Hamming Code Detector and Generator	—	MC4041L,P	650,620,648			240
Quad Predriver	MC4342F,L	MC4042L,P	607,632,646	I_{OL} = 50 mA Open-Collector	15	120
Dual Line Selector	MC4343F,L	MC4043L,P	607,632,646	I_{OL} = 400 mA Pulsed	20	70
Phase-Frequency Detector	MC4344F,L	MC4044L,P	607,632,646	10	9.0	85
Noninverting One-of-Eight Decoder	—	MC4048L,P	650,620,648	Open-Collector I_{OL} = 16 mA	Address Time <50 ns)	240
Counter-Latch-Decoder	MC4350F,L	MC4050L,P	650,620,648	Open-Collector I_{OL} = 40 mA	f_{Tog} = 35 MHz	450
Counter-Latch-Decoder	MC4351F,L	MC4051L,P	650,620,648	Open-Emitter 40 mA Sourcing Capability @ 10% Duty Cycle	f_{Tog} = 35 MHz	450
Dual Decade Counter	MC4352F,L	MC4052L,P	650,620,648	10	f_{Tog} = 40 MHz	350
Dual Hexadecimal Counter	MC4353F,L	MC4053L,P	650,620,648	10	f_{Tog} = 40 MHz	350
Dual Decade Up/Down Counter	MC4354F,L	MC4054L,P	667,623,649	10	f_{Tog} = 12 MHz	600
Dual Binary Up/Down Counter	MC4355F,L	MC4055L,P	667,623,649	10	f_{Tog} = 12 MHz	600
NBCD Adder	MC4356F,L	MC4056L,P	650,620,648	10	30	300
Nines Complement/Zero Element	MC4358F,L	MC4058L,P	607,632,646	10	30	200
Bus Transfer Switch	MC4360F,L	MC4060L,P	650,620,648	10	25	350
Dual Majority Logic Gate	MC4362F,L	MC4062L,P	607,632,646	10	Z = 20 Z = 11	75
64-Bit Random Access Memory	—	MC4064L,P	650,620,648	Open-Collector I_{OL} = 15 mA	Access Time <60 ns	384
Dual MOS-to-TTL Level Translator with Three-State Output	MC4368F,L	MC4068L,P	607,632,646	10	20	150

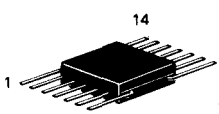

F SUFFIX
CERAMIC PACKAGE
CASE 607

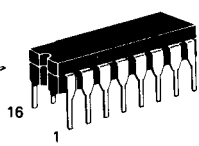

L SUFFIX
CERAMIC PACKAGE
CASE 620

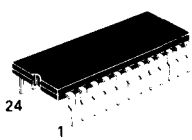

L SUFFIX
CERAMIC PACKAGE
CASE 623

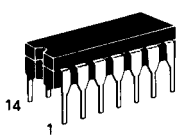

L SUFFIX
CERAMIC PACKAGE
CASE 632

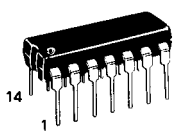

P SUFFIX
PLASTIC PACKAGE
CASE 646

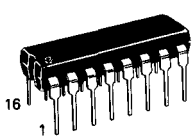

P SUFFIX
PLASTIC PACKAGE
CASE 648

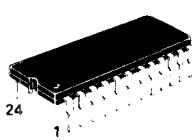

P SUFFIX
PLASTIC PACKAGE
CASE 649

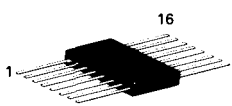

F SUFFIX
CERAMIC PACKAGE
CASE 650

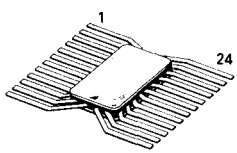

F SUFFIX
CERAMIC PACKAGE
CASE 667

MTTL III
Integrated Circuits

MC3000 Series (0 to +75°C)
MC3100 Series (−55 to +125°C)

MTTL III integrated circuits comprise a family of transistor-transistor logic designed for general purpose digital applications. The family has a high operating speed (30–50 MHz clock rate), good external noise immunity, high fan-out, and the capability of driving lines up to 600 pF capacitance.

Maximum Ratings

Rating		Value	Unit
Supply Voltage — Continuous	MC3100 series	+7.0	Vdc
	MC3000 series	+7.0	Vdc
Supply Operating Voltage Range		4.5 to 5.5	Vdc
Input Voltage		+5.5	Vdc
Output Voltage		+5.5	Vdc
Operating Temperature Range	MC3100 series	−55 to +125	°C
	MC3000 series	0 to +75	°C
Storage Temperature Range —	Ceramic Package	−65 to +175	°C
	Plastic Package	−55 to +125	°C

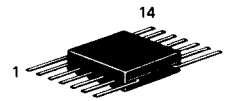

F SUFFIX
CERAMIC PACKAGE
CASE 607

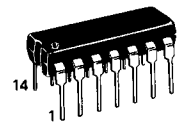

P SUFFIX
PLASTIC PACKAGE
CASE 646

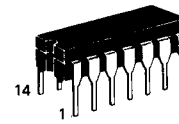

L SUFFIX
CERAMIC PACKAGE
CASE 632

Functions and Characteristics (V_{CC} = 5.0 V, T_A = 25°C)

Function	Type ① Case 632,646 0°C to +75°C	Type ① Case 607,632 −55°C to +125°C	Loading Factor Each Output	Propagation Delay ns typ	Power Dissipation mW typ/pkg
Quad 2-Input AND Gate	MC3001	MC3101	10	9.0	112
Quad 2-Input NOR Gate	MC3002	MC3102	10	6.0	122
Quad 2-Input OR Gate	MC3003	MC3103	10	9.0	150
Triple 3-Input NAND Gate (Open-Collector)	MC3007	MC3107	10	8.0	66
8-Input NAND Gate	MC3015	MC3115	10	8.0	22
Quad 2-Input Exclusive OR Gate	MC3021	MC3121	8	14	100
Quad 2-Input Exclusive NOR Gate	MC3022	MC3122	8	14	85
Dual 4-Input NAND Power Gate	MC3025	MC3125	20	6.0	70
Dual 4-Input AND Power Gate	MC3026	MC3126	20	9.0	90
Dual 3-Input 3-Output AND Series Terminated Line Driver	MC3028	MC3128	*	9.0	56
Dual 3-Input 3-Output NAND Series Terminated Line Driver	MC3029	MC3129	*	6.0	44
AND Input J-K Flip-Flop	MC3051	MC3151	10	f = 50 MHz	50
AND Input JJ-KK Flip-Flop	MC3052	MC3152	10	f = 40 MHz	75
Dual Type D Flip-Flop	MC3060	MC3160	10	f = 30 MHz	120
Dual J-K Flip-Flop	MC3061	MC3161	10	f = 50 MHz	100
Dual J-K Flip-Flop	MC3062	MC3162	10	f = 50 MHz	100

① F suffix denotes Flat Package, L suffix denotes Dual In-Line Ceramic Package, P suffix denotes Plastic Package, (i.e., MC3001F = Flat Package, MC3001L = Ceramic Package, MC3001P = Plastic Package).
*Direct Output = 10 minus the number of resistor-terminated outputs being used.

MDTL
Integrated Circuits

MC830 Series (0 to +75°C)
MC930 Series (−55 to +125°C)

MDTL integrated circuits provide an excellent balance of speed, power dissipation, and noise immunity for general purpose digital applications. The line includes many multifunction types. Additional logic power is provided by the "wired OR" capability of the basic MDTL gate.

Maximum Ratings

Rating	Value	Unit
Supply Voltage —		Vdc
Operating	4.5 to 5.5	
Continuous	8.0	
Pulsed, <1 second	12	
Output Current (Into Outputs with Outputs Low)		mAdc
Buffers, Power Gates — Continuous	100	
Pulsed, < 30 ms	300	
All other types — Continuous	30	
Pulsed, < 30 ms	90	
Input Forward Current —		mAdc
Continuous	−10	
Pulsed, < 30 ms	−30	
or		
Negative Voltage at Input —		Vdc
Continuous	−0.5	
Pulsed, < 30 ms	−1.5	

Rating	Value	Unit
Input Reverse Current	1.0	mAdc
or		
Positive Voltage at Diode Input	5.5	Vdc
Operating Temperature Range		°C
MC930 Series	−55 to +125	
MC830 Series	0 to +75	
Storage Temperature Range		°C
Ceramic Package	−65 to +150	
Plastic Package	−55 to +125	
Maximum Junction Temperature		°C
MC930 Series	175	
MC830 Series	150	

Functions and Characteristics (V_{CC} = 5.0 Vdc, T_A = 25°C)

Function	Type① 0 to +75°C	Case	Type① −55 to +125°C	Case	Loading Factor Each Output	Propagation Delay ns typ	Power Dissipation mW typ/pkg
Expandable Dual 4-Input NAND Gate	MC830	607,632,646	MC930	607,632	8	30	22
Expandable Dual 4-Input Buffer	MC832	607,632,646	MC932	607,632	25	35	85
Dual 4-Input Expander	MC833	607,632,646	MC933	607,632	—	—	—
Hex Inverter	MC834	607,632,646	MC934	607,632	8	30	66
Hex Inverter (without output resistors)	MC835	607,632,646	MC935	607,632	8	30	42
Hex Inverter	MC836	607,632,646	MC936	607,632	8	30	66
Hex Inverter	MC837	607,632,646	MC937	607,632	7	25	90
Decade Counter	MC838	607,632,646	MC938	607,632	8	30 MHz③	150
Divide-by-Sixteen Counter	MC839	607,632,646	MC939	607,632	8	30 MHz③	150
Hex Inverter (without input diodes)	MC840	607,632,646	MC940	607,632	8	30	66
Hex Inverter (without output resistors and input diodes)	MC841	607,632,646	MC941	607,632	8	30	42
Expandable Dual 4-Input Power Gate	MC844	607,632,646	MC944	607,632	27	30	65
Clocked Flip-Flop	MC845	607,632,646	MC945	607,632	12/10②	40	60
Quad 2-Input NAND Gate	MC846	607,632,646	MC946	607,632	8	30	44
Clocked Flip-Flop	MC848	607,632,646	MC948	607,632	11/9②	40	70
Quad 2-Input NAND Gate (2 k pullup resistor)	MC849	607,632,646	MC949	607,632	7	25	66
Pulse Triggered Binary	MC850	607,632,646	MC950	607,632	10/8②	15	50
Monostable Multivibrator	MC851	607,632,646	MC951	607,632	10	40	30
Dual J-K Flip-Flop (common clock and C_D, separate S_D)	MC852	607,632,646	MC952	607,632	12/10②	40	120
Dual J-K Flip-Flop (separate clock and S_D, no C_D)	MC853	607,632,646	MC953	607,632	12/10②	40	120

MDTL INTEGRATED CIRCUITS (continued)

Function	Type① 0 to +75°C	Case	Type① −55 to +125°C	Case	Loading Factor Each Output	Propagation Delay ns typ	Power Dissipation mW typ/pkg
Dual J-K Flip-Flop (common clock and C_D separate S_D, 2 k pullup resistor)	MC855	607,632,646	MC955	607,632	11/9②	40	140
Dual J-K Flip-Flop (separate clock and S_D no C_D, 2 k pullup resistor)	MC856	607,632,646	MC956	607,632	11/9②	40	140
Quad 2-Input Buffer	MC857	607,632,646	MC957	607,632	25	35	170
Quad 2-Input NAND Power Gate	MC858	607,632,646	MC958	607,632	27	30	130
Expandable Dual 4-Input NAND Gate (2 k pullup resistor)	MC861	607,632,646	MC961	607,632	7	25	33
Triple 3-Input NAND Gate	MC862	607,632,646	MC962	607,632	8	30	33
Triple 3-Input NAND Gate (2 k pullup resistor)	MC863	607,632,646	MC963	607,632	7	25	50
Dual 5-Input NAND Gate (6 k pullup resistor)	MC1800	607,632,646	MC1900	607,632	8	30	22
Dual 5-Input NAND Gate (2 k pullup resistor)	MC1801	607,632,646	MC1901	607,632	7	25	33
Expandable 8-Input NAND Gate	MC1802	607,632,646	MC1902	607,632	8	30	11
Expandable 8-Input NAND Gate (2 k pullup resistor)	MC1803	607,632,646	MC1903	607,632	7	25	16.5
10-Input NAND Gate	MC1804	607,632,646	MC1904	607,632	8	30	11
10-Input NAND Gate (2 k pullup resistor)	MC1805	607,632,646	MC1905	607,632	7	25	16.5
Quad 2-Input AND Gate	MC1806	607,632,646	MC1906	607,632	8	35	72
Quad 2-Input AND Gate (2 k pullup resistor)	MC1807	607,632,646	MC1907	607,632	7	30	85
Quad 2-Input DR Gate	MC1808	607,632,646	MC1908	607,632	8	35	97
Quad 2-Input OR Gate (2 k pullup resistor)	MC1809	607,632,646	MC1909	607,632	7	30	115
Quad 2-Input NOR Gate	MC1810	607,632,646	MC1910	607,632	8	30	60
Quad 2-Input NOR Gate (2 k pullup resistor)	MC1811	607,632,646	MC1911	607,632	7	25	72
Quad 2-Input Exclusive OR Gate	MC1812	607,632,646	MC1912	607,632	8	40	120
Quad Latch	MC1813	620,648	—	—	7	35	220
Quad Latch	MC1814	607,632,646	MC1914	607,632	7	35	220
Quad 2-Input NAND Gate (without output resistor)	MC1818	607,632,646	MC1918	607,632	8	30	32
High Voltage Hex Inverter	MC1820	632,646	—	—	7	40	42

① F suffix denotes Ceramic Flat Package, L suffix denotes Dual In-Line Ceramic Package, P suffix denotes Dual In-Line Plastic Package. (i.e. MC830F = Flat Package, MC830L = Dual In-Line Ceramic Package, MC830P = Plastic Package)
② Fan-out for MC830 series type/Fan-out for MC930 series type.
③ Counting frequency.

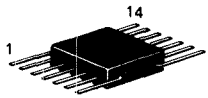

F SUFFIX
CERAMIC PACKAGE
CASE 607

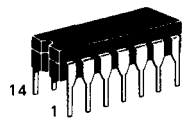

L SUFFIX
CERAMIC PACKAGE
CASE 632

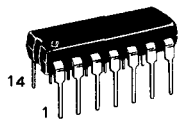

P SUFFIX
PLASTIC PACKAGE
CASE 646

MHTL
Integrated Circuits

MC660P, L Series (−30 to +75°C)
***MC660TL Series (−55 to +125°C)**

Motorola's MHTL integrated circuits are especially designed to meet the requirements of industrial applications because of the outstanding noise immunity. MHTL circuits provide error-free operation in high noise environments far beyond the tolerance of other integrated circuit families. Multifunction packages and broad operating temperature range further tailor this device family to the industrial designer's requirements.

* MHTL ceramic dual in-line devices are available with specification over the −55°C to +125°C temperature range and/or with hi-rel processing on special order. See your Motorola representative for pricing.

Package drawings are shown on page 145

Typical Characteristics

Rating	Value	Unit
Supply Voltage	15 ± 1.0	Vdc
Threshold Voltage	7.5	Vdc
Logic "0" Output Voltage @ I_{OL} = 5 mA		
(Active Pullup Output)	1.0	Vdc
(Passive Pullup)	0.4	Vdc
Logic "1" Output Voltage @ V_{CC} = 15 V		
(Active Pullup Output)	14.4	Vdc
(Passive Pullup)	14.9	Vdc
Noise Margin	6.0	Vdc

Functions and Characteristics (V_{CC} = 15 V ± 1.0 Vdc, T_A = 25dgC)

Function	Type①	Loading Factor Each Output	Propagation Delay ns typ	Power Dissipation mW typ/pkg	Case
Expandable Dual 4-Input NAND Gate (active pullup)	MC660	10	110	88/26②	632,646
Expandable Dual 4-Input NAND Gate (passive pullup)	MC661	10	125	88/26②	632,646
Expandable Dual 4-Input Line Driver (NAND)	MC662	30	140	180/26②	632,646
Dual J-K Flip-Flop	MC663	9	3.0 MHz③	200	632,646
Master-Slave R-S Flip-Flop	MC664	8	3.0 MHz③	160	632,646
Triple Level Translator	MC665	MDTL = 8 MTTL III = 5.5	40	83 (MDTL)	632,646
Triple Level Translator	MC666	10	75	105	632,646
Dual Monostable Multivibrator	MC667	10	140	240	632,646
Quad 2-Input NAND Gate (passive pullup)	MC668	10	125	176/52②	632,646
Dual 4-Input Expander	MC669	—	—	—	632,646
Triple 3-Input NAND Gate (passive pullup)	MC670	10	125	132/39②	632,646
Triple 3-Input NAND Gate (active pullup)	MC671	10	110	132/39②	632,646
Quad 2-Input NAND Gate (active pullup)	MC672	10	110	176/52②	632,646
Dual 2-Input AND-OR-INVERT Gate (active pullup)	MC673	10	110	160/50②	632,646
Dual 2-Input AND-OR-INVERT Gate (passive pullup)	MC674	10	125	160/50②	632,646
Dual Pulse Stretcher/Multivibrator	MC675	10	150 (Pins 1,6) 110 (Pins 5,6)	180	632,646
BCD-To-Decimal Decoder-Driver	MC676	—	500	380	620,648
Hex Inverter With Strobe (active pullup)	MC677	10	110	246/96②	620,648
Hex Inverter With Strobe (without output resistors)	MC678	10	125	192/96②	620,648
Dual Lamp/Line Driver	MC679,B	125	0.5 μs typ	250/30②	632,646
Hex Inverter (active pullup)	MC680	10	110	246/96②	632,646
Hex Inverter (Open-Collector)	MC681	10	125	192/96②	632,646
Quad Latch	MC682	10	250	375	620,648
Quad 2-Input Exclusive OR Gate	MC683	10	—	380	632,646
Decade Counter	MC684	10	0.5 MHz③	480	620,648
Binary Counter	MC685	10	0.5 MHz③	480	620,648
4-Bit Shift Register	MC686	10	0.5 MHz③	480	620,648
Dual J-K Flip-Flop	MC688	10	2.5 MHz③	375	620,648
Hex Inverter (high voltage)	MC689	10	150	173/55②	632,646
Hex Inverter (active pullup)	MC690	10	150	173/55②	632,646
Hex Inverter/Interface Element	MC691	10	300	500/150②	632,646
250 mA Quad 2-Input NAND Gate (Schmitt Trigger)	MC693	200	400	300	620,648
Dual Interface Element, Line Driver/Receiver (Schmitt Trigger)	MC696	10 @ 10 V V_{CC} 15 @ 25 V V_{CC}	400	225/60②	620,648
Hex Inverter (passive pullup)	MC697	10	125	246/96②	632,646
500 mA Dual 2-Input AND Gate (Schmitt Trigger)	MC699	400	400	450	632

① L suffix denotes Dual In-Line Ceramic Package, P denotes Dual In-Line Plastic Package (i.e., MC660L = Dual In-Line Ceramic, MC660P = Dual In-Line Plastic Package)
② Inputs High/Input Low ③ f_{Tog}

Chapter 11

Telecommunication Circuits

The evolution of telephone equipment technology is accelerating as we enter the information age. Motorola is contributing to this evolution by developing components that utilize advanced Bipolar and MOS technologies to serve the telecommunication industry.

The product line spans the whole spectrum of Telecommunication Applications, from devices for digital switching to products for the telephone instrument and for the emerging data communications market.

Table of Contents

	Page
Digital Switching	11-2
MC3419/MC34019 Subscriber Loop Interface Circuit	11-2
MC14404/14406/14407 PCM Codecs	11-3
MC14413/14414 PCM Filters	11-3
MC14400/14401/14402 PCM Mono-circuits	11-4
MC14417/14418 TSACs	11-5
MC14416 TSAC	11-6
Analog Switching	11-6
MC3416 Crosspoint Switch	11-6
MC142100/145100 Crosspoint Switches	11-7
Data Communications	11-8
MC14412 Low Speed Modem	11-8
MC6170 300 Baud Modem Filter	11-9
MC14411 Bit Rate Generator	11-9
Telephone Instruments	11-10
MC14410 Tone Encoder	11-10
MC14408/14409 Pulse Dialer	11-11
MC14419 Keypad-to-Binary Encoder	11-12
TCA3381 Ring Signal Energy Recovery	11-12
TCA3382 Ring Detector and Speaker Driver	11-13
TCA3383 Transmission Circuit	11-14
Voice Encoding/Decoding	11-15
MC3417/3418/3517/3518 CVSD Encoder/Decoder	11-15
Telecommunication Products	11-15

SUBSCRIBER LOOP INTERFACE CIRCUIT

MC3419 . . . designed to replace the hybrid transformer circuit in Central Office, PABX and Subscriber carrier equipment, providing signal separation for two-wire differential to four-wire single-ended conversions and suppression of longitudinal signals at the two-wire input. It provides dc line current for powering the telset, operating from up to a 56 V supply.

T_A = 0 to +70°C

Package:
L Suffix — Case 726

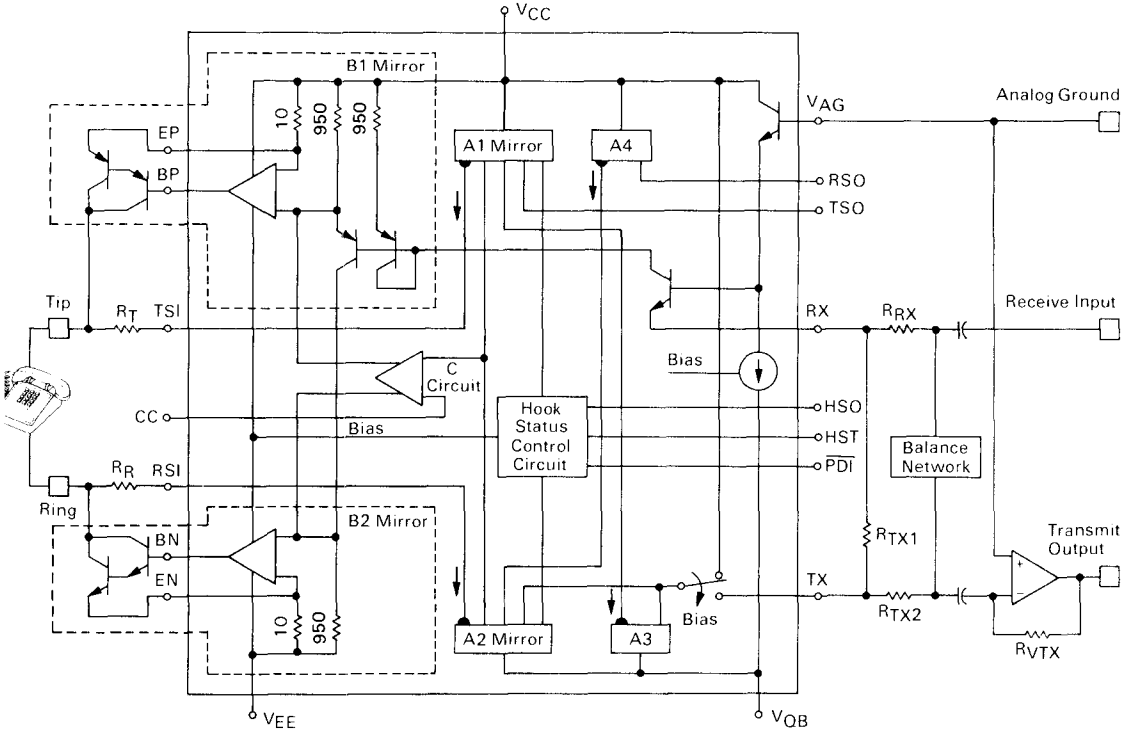

Device	Longitudinal Balance (dB)	Noise (dBrnc0)
MC3419CL	40	18
MC3419L	45	13
MC3419AL	55	10

MC34019

MC34019 subscriber loop interface circuit is an extension of the MC3419 SLIC.

It provides all the functions of the MC3419 plus following features:

- The 2 darlingtons replaced by 2 single transistors
- Internal current limiting programmable by a single resistor
- Line current setting accurate with an internal compensation circuit
- Polarity inversion on the line thanks to a 'source and sink' internal bridge configuration

MC14404—MC14406—MC14407
Companded PCM Codecs

CMOS PCM Codec

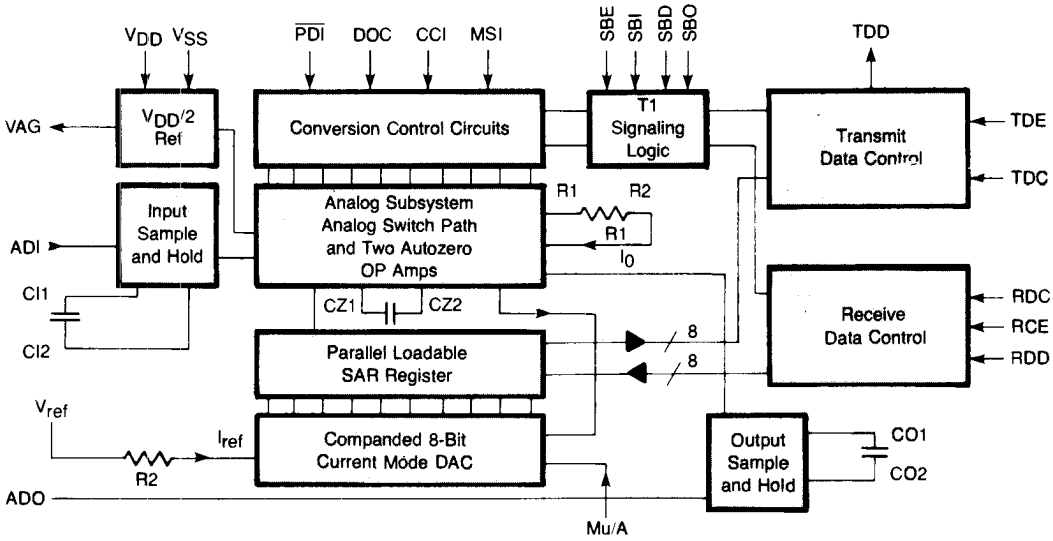

- CMOS for Low-Power Dissipation (80 mW Active and 1 mW Powered Down)
- CCITT and D3/D4 Specified Products
- Chip Carrier Package
- Single Supply Operation
- 128 kHz to 3.088 MHz Operation

MC14413—MC14414
Switched Capacitor PCM Filters

PCM Filter

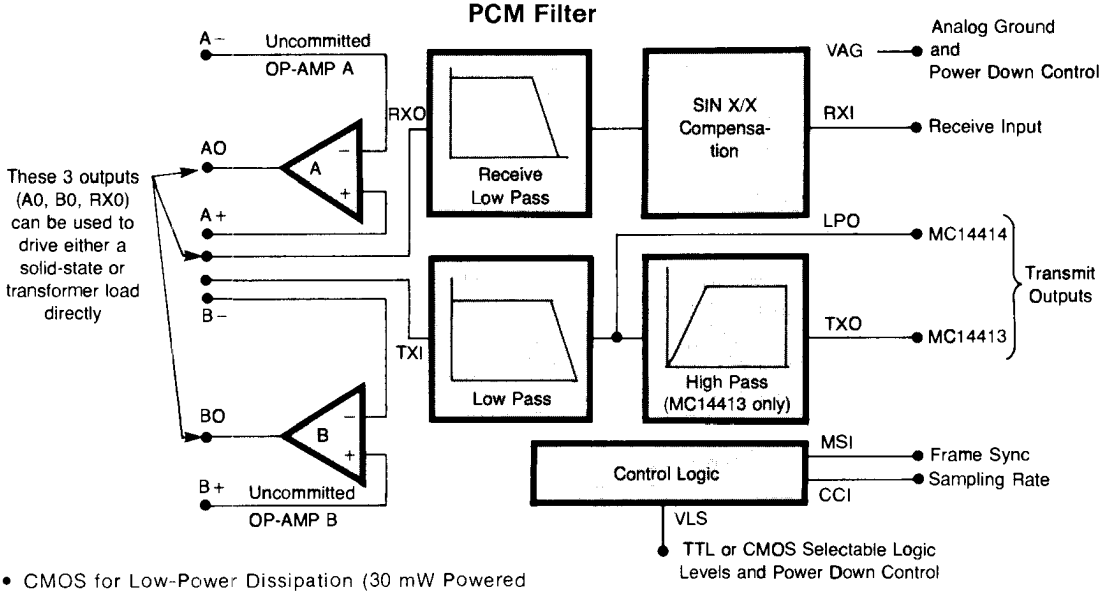

- CMOS for Low-Power Dissipation (30 mW Powered Up, 1 mW Powered Down)
- TTL and CMOS Level Compatible
- Sin X/X Compensated Receive Lowpass
- ±5.0 to ±8.0 Volt Power Supply Ranges
- Chip Carrier Package
- Second Sourced

MC14400—MC14401—MC14402
PCM Codec-Filter Mono-circuits

The PCM mono-circuits offer the user optimum devices to reduce the complexity and cost of his digital line circuits. Motorola accomplishes this by integrating a precision voltage reference, the PCM Codec and the PCM Filter in a single chip of silicon, eliminating external components and packaging the device in a 16-pin DIP.

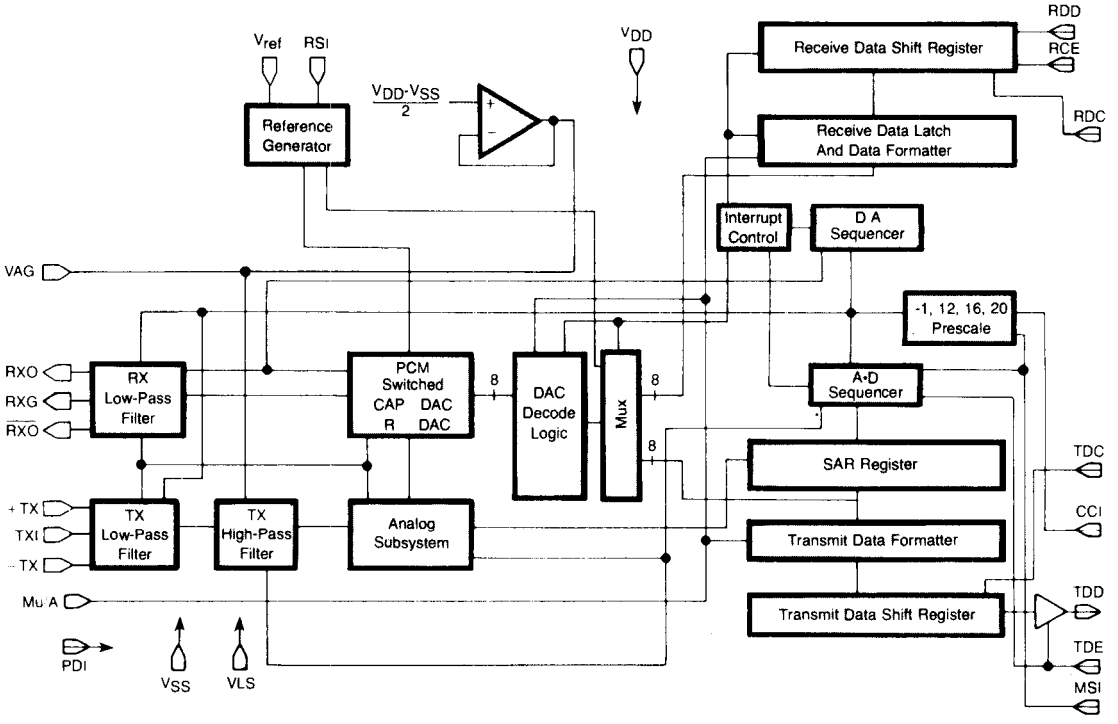

- 16-Pin Package
- On-Chip Voltage Reference
- No External Components
- TTL and CMOS Level/Compatible
- Pin Selection of USA or European Standards
- Upward Compatible with Motorola's 2-Chip Codec and Filter
- CMOS for Low-Power Dissipation (50 mW Active, 1 mW Powered Down)
- Operation from 64 kHz to 3.088 MHz

Motorola's Codecs and filters are intended for use in coding voice for PCM based equipment. These devices are designed to meet both the USA and European telephone standards.

The TSACs — Microprocessor-Compatible Line-Card Controller Circuits

TSACs (Time Slot Assignment Circuits) introduce a new approach to per-channel time slot assignments and simplified implementation of a variety of complex control functions.

They assign the codec to separate 8-bit transmit and receive time slots in digital serial data streams. The MC14418 uses a serial port to communicate with a microprocessor.

All three versions of the TSAC are fabricated in the reliable, standard metal-gate CMOS process, and are second-sourced through a mask exchange with RCA.

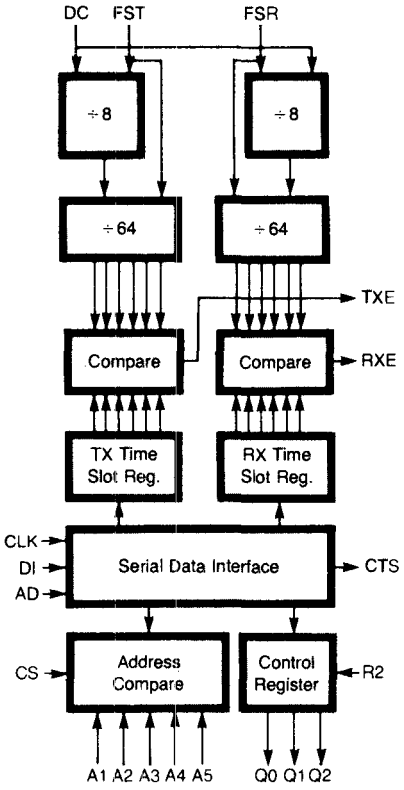

MC14418

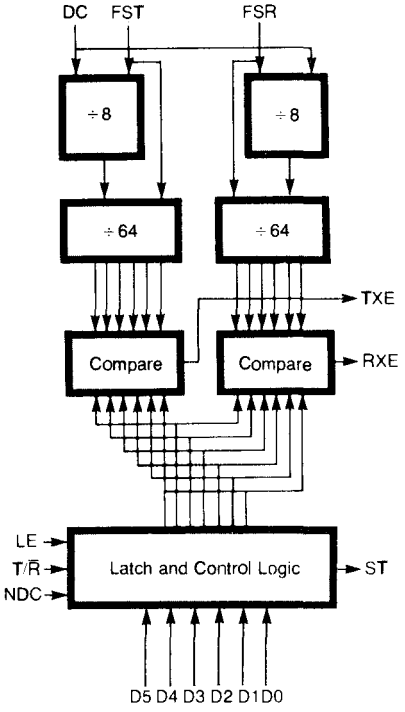

MC14417

The bus-addressable TSAC — MC14418

The MC14418 is our full featured TSAC in a 22-pin package. In addition to performing all the supervision and control functions required on a single-party telephone line circuit, it performs the variable time slot assignment required in many digital switching applications.

The TSAC can program for up to 64 8-bit time slots through a serial microprocessor port. It also has three additional MPU-programmed control bits that can be used for ring enable, power down, receive data/tone or other control and supervision functions. A reset pin is used, in conjunction with the ring enable, to perform the ring trip function.

A simple, unique MC14418 addressing capability allows use of a completely parallel backplane for PCM codec-based equipment. This simplifies backplane wiring and assembly of the channel group.

A parallel-input TSAC — MC14417

This TSAC has the same core as the MC14418 but doesn't use the MPU port feature. Time slot data inputs are directed through an 8-bit parallel port. The data may be either hard wired on the printed circuit or parallel loaded by a processor using the Latch Enable function.

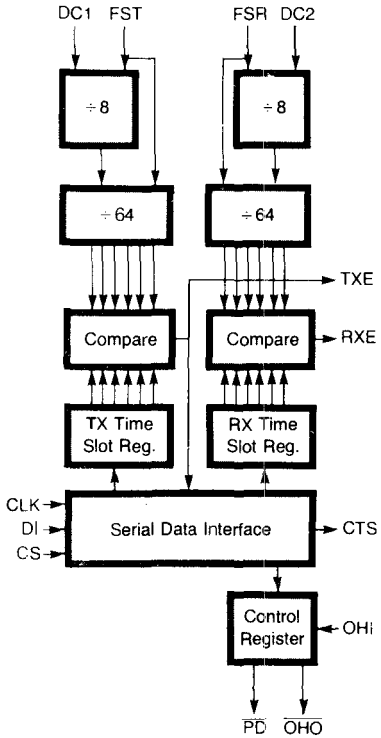

MC14416

A serial input TSAC — MC14416

The MC14416 is also a subset of the MC14418. It performs the time slot assignment function using the serial MPU port but lacks the simplified addressing or line circuit control capabilities of the MC14418. Note, however, that when the MC14416 is used with Motorola's MC14407 codec, it retrofits a system designed with Intel's 2910 codec.

Analog Switching

Crosspoint Switch

MC3416 — Low-cost solid-state crosspoint switch offers important advantages in modern telephone exchanges employing space-division switching. Features 4 x 4 two-wire monolithic structure for PABX applications. Select inputs are both CMOS and TTL compatible.

T_A = 0 to +70°C

Packages:
P Suffix — Case 649
L Suffix — Case 623

r_{off} @ V_{AK} = 10 V MΩ Min	r_{on} @ I_{AK} = 20 mA Ohms Max	$V_{(BR)AK}$ $V_{(BR)KA}$ Volts Min	V_{AK} @ I_{AK} = 20 mA Volts Max
100	10	25	1.1

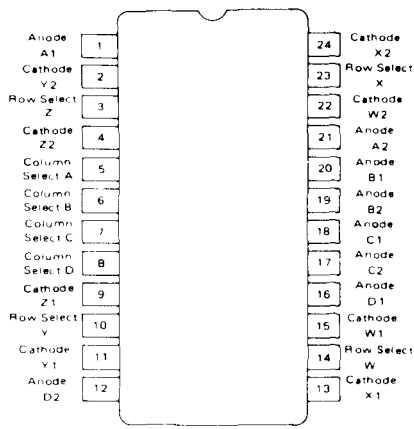

MC142100/MC145100 — 4× 4 Crosspoint Switch with Control Memory

The MC142100 and MC145100 consist of 16 crosspoint switches (analog transmission gates) organized in 4 rows and 4 columns. Both devices have 16 latches, each of which controls the state of a particular switch. Any of the 16 switches can be selected by applying its address to the device and a pulse to the strobe input. The selected crosspoint will turn on if during strobe, Data In was a one and will turn off if during strobe, Data In as a zero. In addition the MC145100 will reset all non-selected switches in the same row as the selected switch. Other switches are unaffected. In the MC145100, an internal power-on reset turns off all switches as power is applied.

- Internal Latches Control State of Switches
- Power-On Reset (MC145100 Only)
- Low On Resistance — Typically on 110 Ω @ 10 Vdc
- Large Analog Range (V_{DD}-V_{SS})
- All Pins Are Diode Protected
- Matched Switch Characteristics
- High CMOS Noise Immunity
- MC142100 Pin-for-Pin Replacement for CD22100

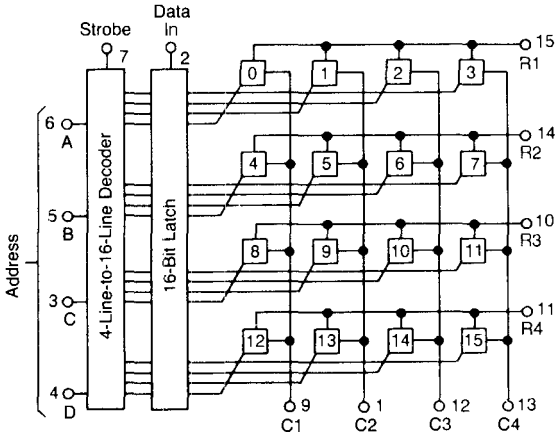

Data Communications

MC14412 — Universal Low Speed Modem (0-600 bps)

The MC14412 contains a complete FSK (Frequency-Shift Keying) modulator and demodulator compatible with both foreign (CCITT standards) and U.S.A. low speed (0 to 600 bps) communication networks.

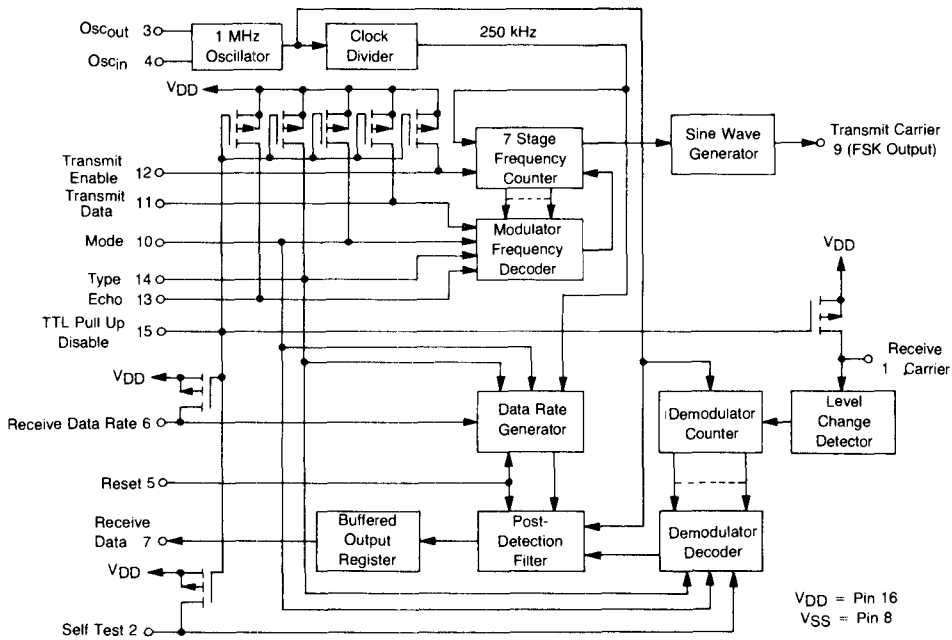

- On Chip Crystal Oscillator
- Echo Suppressor Disable Tone Generator
- Originate and Answer Modes
- Simplex, Half-Duplex, and Full Duplex Operation
- On Chip Sine Wave Generator
- Modem Self Test Mode
- Single Supply:
  V_{DD} = 4.75 to 15 Vdc MC14412FP
  V_{DD} = 4.75 to 6.0 Vdc MC14412VP
- Selectable Data Rates: 0-300, 0-600 bps
- Post Detection Filter
- TTL or CMOS Compatible Inputs and Outputs

MC6170 — 300 Baud Originate Modem Filter

The MC6170 is a dual filter IC intended to provide the band separation filtering necessary in low speed (300 Baud) originate modems. The transmit lowpass and receive bandpass filtering functions are performed by sampled data, charge coupled devices (CCDs). Included on the chip are two totally uncommitted op amps for use elsewhere in a system, and a clock driver requiring only an external crystal.

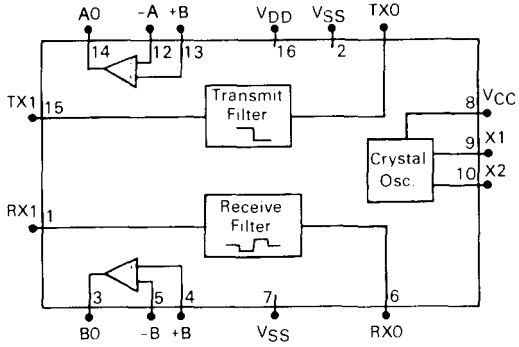

- Compatible with 300 Baud Modems (MC14412, MC6860)
- Transmit Lowpass and Receive Bandpass Filters
- Two Op Amps Totally Uncommitted to Reduce System Component Count
- Common Power Supplies: ±5, +12 V
- Low Operating Power Consumption

MC14411 — Bit Rate Generator

The MC14411 bit rate generator is constructed with complementary MOS enhancement mode devices. It utilizes a frequency divider network to provide a wide range of output frequencies.

A crystal controlled oscillator is the clock source for the network. A two-bit address is provided to select one of four multiple output clock rates.

Applications include a selectable frequency source for equipment in the data communications market, such as teleprinters, printers, CRT terminals, and microprocessor systems.

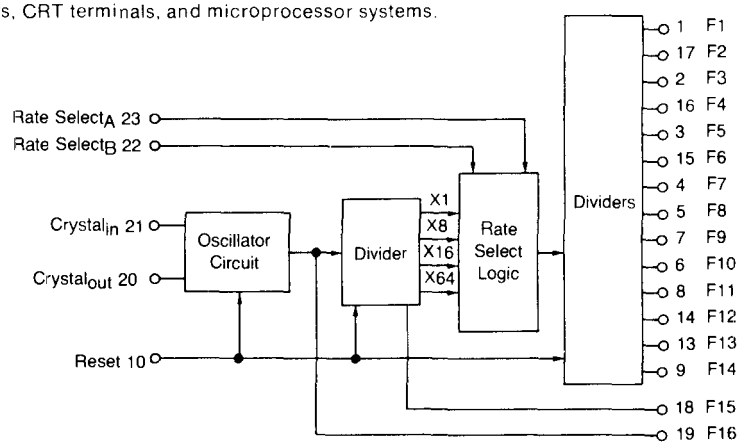

- Single 5.0 Vdc (±5%) Power Supply
- Internal Oscillator Crystal Controlled for Stability (1.8432 MHz)
- Sixteen Different Output Clock Rates
- 50% Output Duty Cycle
- Programmable Time Bases for One of Four Multiple Output Rates
- Buffered Outputs Compatible with Low Power TTL
- Noise Immunity = 45% of V_{DD} Typical
- Diode Protection on All Inputs
- External Clock May be Applied to Pin 21

Telephone Instruments

MC14410 — 2-of-8 Tone Encoder

The MC14410 2-of-8 tone encoder is constructed with complementary MOS enhancement mode devices. It is designed to accept digital inputs in a 2-of-8 code format and to digitally synthesize the high and low band sine waves specified by telephone tone dialing systems. The inputs are normally originated from a 4 × 4 matrix keypad, which generates 4 row and 4 column input signals in a 2-of-8 code format (1 row and 1 column are simultaneously connected to V_{SS}). The master clocking for the MC14410 is achieved from a crystal controlled oscillator which is included on the chip. Internal clocks, which operate the logic, are enabled only by one or more row and column signals being activated simultaneously. The two sine wave outputs have NPN bipolar structures on the same substrate which allows for low output impedance and large source currents.

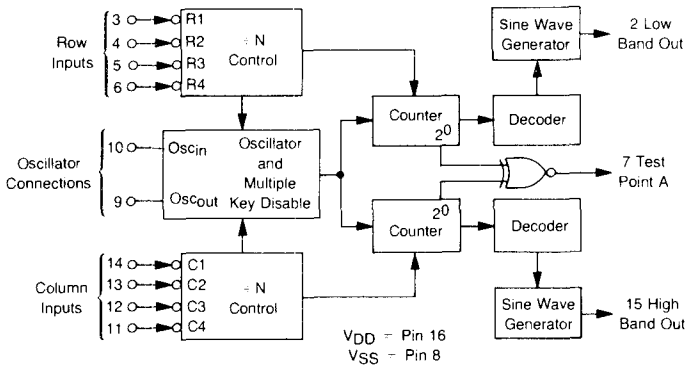

- Supply Voltage Range = 4.4 Vdc to 6.0 Vdc
- On-Chip Oscillator (Crystal or External Clock Source may be applied to Pin 10)
- On-Chip Pull-Up Resistors on Row and Column Inputs
- Designed with Multiple Key Lockout (Eliminates Need for Mechanical Lockout in Keypad)
- Two Sine Wave Generators On-Chip
- Frequency Accuracy ±0.2%
- Low Harmonic Distortion
- Single Tone Capability
- Fast Oscillator Turn-On and Turn-Off Times

MC14408—MC14409 — Binary to Phone Pulse Converter Subsystem

The MC14408 and the MC14409 are devices designed to convert a four bit binary input code to a number of serial output pulses corresponding to the value of the input code.

The devices can be used in telphone pulse dialing applications when combined with their companion device, the MC14419 (2-of-8 keypad-to-binary code converter). The devices have been partitioned to allow convenient addition of RAM memory and controls for repertoire dialing applications.

The MC14408 and MC14409 perform identical functions with the exception of the signal output at the DRO (Dial Rotating Output). In the MC14408, DRO remains high during continuous outpulsing of all digits and in the MC14409 DRO is low between each digit pulse burst.

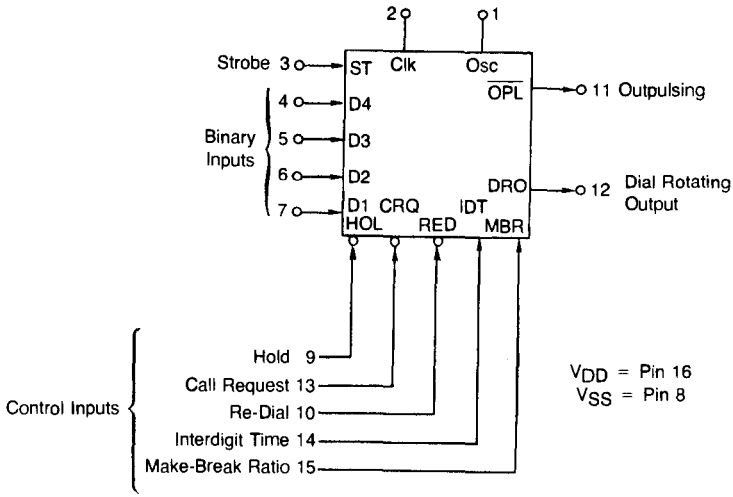

- On-Chip Oscillator
- Diode Protection on All Inputs
- Dialing of Numbers Up to 16 Digits Long
- Memory Storage (FIFO) and Re-Dialing (single pin) of Last Telephone Number
- Hold Interrupt Control for Additional Interdigit Delays (such as a Wait for Intermediate Dial Tones)
- Selectable Dialing Rate (10 pps or 20 pps)
- Selectable Interdigit Time (300 or 800 ms @ 100 pps; 150 or 400 ms @ 20 pps)
- Selectable Make-Break Ratio (61% or 67%)
- Buffered Outputs Compatible with Discrete Transistor Driver Interface, One Low-Power Schottky TTL Load or Two Low-Power TTL Loads Over the Rated Temperature Range
- Low Power Dissipation — I_{DD} (operating with oscillator) = 470 μA typ @ V_{DD} = 5.0 Vdc, f_{Osc} = 16 kHz, C_L = 50 pF

MC14419 — 2-of-8 Keypad-to-Binary Encoder

The MC14419 is designed for phone dialer system applications, but finds many applications as a keypad-to-binary encoder. The device contains a 2-of-8 to binary encoder, a strobe generator, and an illegal state detector. The encoder has four row inputs and four column inputs, and is designed to accept inputs from 16 keyswitches arranged in a 4 × 4 matrix. For an output on the four data lines, one and only one row along with one and only one column input line must be activated. All other combinations are suppressed by the illegal state detector to eliminate false data output.

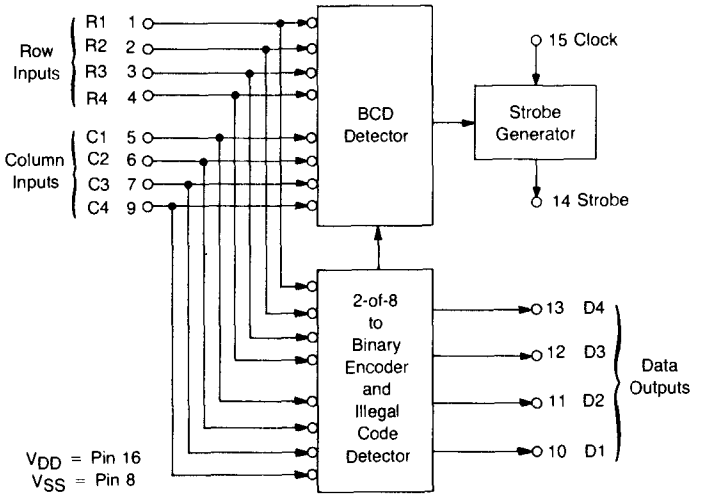

- • Suppressed Output for Illegal Input Codes
- On-Chip Pullup Resistors for Row and Column Inputs
- Clock Input Conditioning Circuit
- Low Current Drain in Standby Mode
  5.0 μA Typical @ 5.0 Vdc
- Subsystem Complement to the MC14408/14409 Phone Pulse Converter
- Codes for Numbers 0-9 Produce a Strobe Pulse

TCA3381—Ringing Signal Energy Recovery Circuit

With the telephone receiver on-hook, the TCA3381 is connected to the telephone line and converts the ringing voltage into a current supply for the TCA3382 amplifier circuit, with avoidance of harmonic distortion of the line signal.

Input impedance ist programmable so that it can be matched to any telephone lien specification, ant the device contains over-voltage input protection.

TCA3382—Telephone Set Ring Detection & Loudspeaker Amplifier Circuit

The TCA3382 Telephone Set Speaker Amplifier I.C. is designed for use with the companion TCA3383 Transmission Circuit, and TCA3381. These decives together with a microcomputer form the basis of a fully electronic telephone set. With the telephone on-hook, the TCA3382 detects the presence of a call signal on the line and energy is derived from this signal to power up the system so that a ring melody generated by the microcomputer is heard at the loudspeaker. With the telephone off-hook, the received speech signal is heard at the loudspeaker. Sidetone and line length compensation of the speaker amplifier gain are provided.

Features

- Power derived from Ring Signal.
- Reset/$\overline{\text{Reset}}$ and Ring outputs for microcomputer.
- Amplifier gain controlled by microcomputer.
- Guaranteed ring signal detection limits.
- Low current consumption, 600 μA typical in Ring mode.

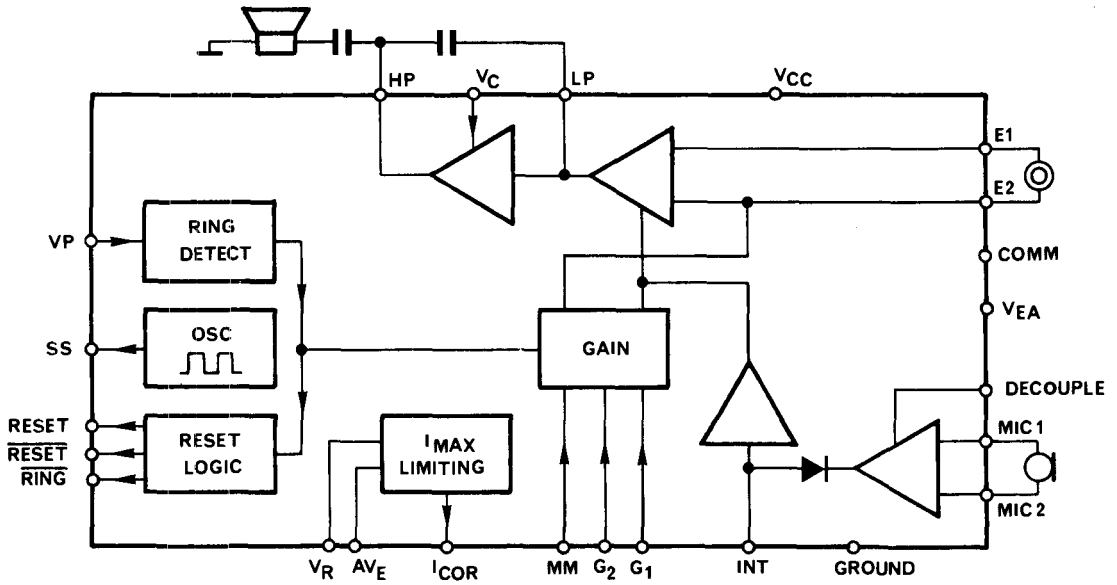

TCA3383—Transmission Circuit

The TCA3383 is a monolithic integrated circuit using bipolar technology. It is used as interface between the subscriber line and the telephone set. Only very few external components are required in its typical application. The main feature is to avoid the use of the differential transformer. The circuit allows the use of decimal dialing as well as multitone dialing (DTMF).

Features

- Line current regulation (long line)/Voltage regulation (short line)
- Impedance matching between line and telephone set
- RX and TX signals level setting according to the line length
- Side-tone rejection
- 3.9 V output for external digital circuits
- Loop disconnect dialing or DTMF dialing

Typical Application

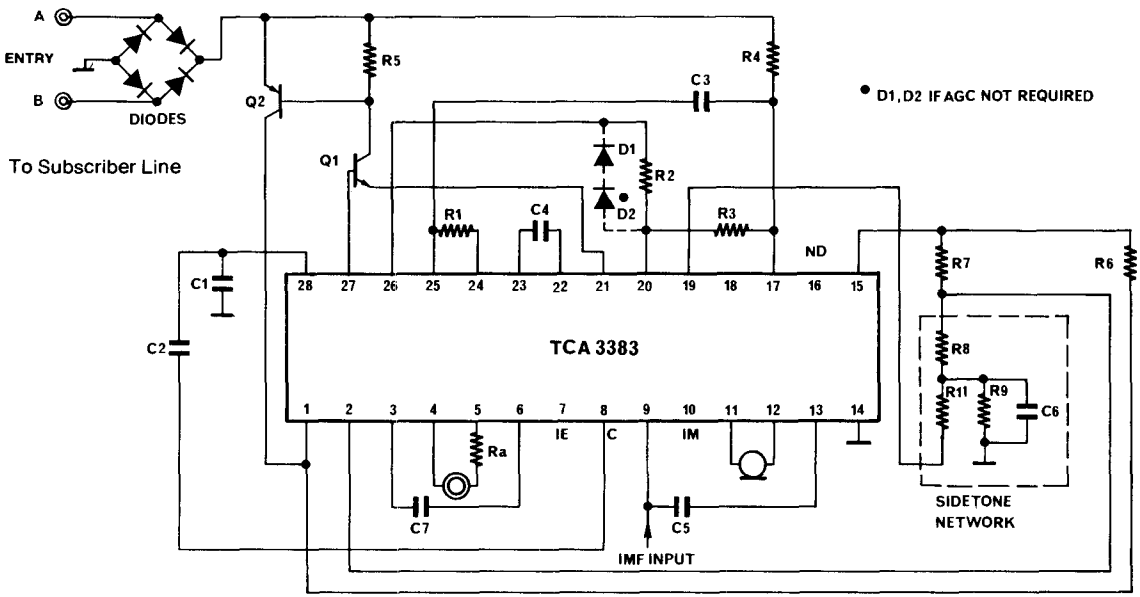

Voltage and line regulation are adjusted by the internal circuitry and performed by the composite schematic shown above.

Voice Encoding/Decoding

Simplified voice encoding/decoding using continuous Variable Slope Delta Modulator (CVSD) technique.

MC3417/MC3517 – 3-bit algorithm; for military secure communication and general-purpose low-sampling rate applications.

MC3418/MC3518 – 4-bit algorithm; telephone quality.

T_A = 0 to +70°C — MC3417/MC3418
= −55 to +125°C — MC3517/MC3518

Packages:
L Suffix – Case 620
P Suffix – Case 648

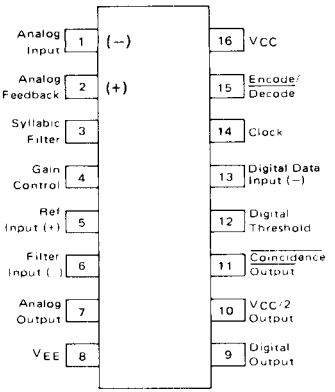

Device Number	Sample Rate Samples/s Typ	Total Loop Offset Voltage mV Max	t_{PD}, Clock Trigger to Output µs Max
MC3417/MC3517	16 k	±5.0	2.5
MC3418/MC3518	32 k	±2.0	2.5

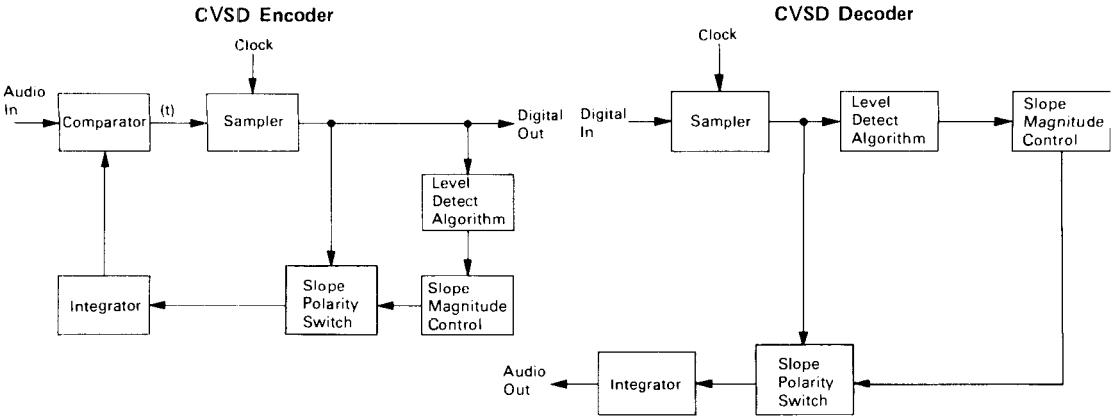

Telecommunication Products

Package Styles

L SUFFIX
CERAMIC PACKAGE
CASE 620

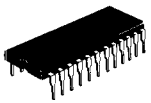
L SUFFIX
CERAMIC PACKAGE
CASE 623

L SUFFIX
CERAMIC PACKAGE
CASE 632

P SUFFIX
PLASTIC PACKAGE
CASE 646

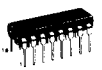
P SUFFIX
PLASTIC PACKAGE
CASE 648

L SUFFIX
CERAMIC PACKAGE
CASE 690

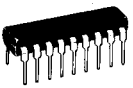
P SUFFIX
PLASTIC PACKAGE
CASE 707

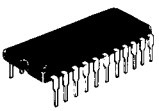
P SUFFIX
PLASTIC PACKAGE
CASE 708

P SUFFIX
PLASTIC PACKAGE
CASE 709

P SUFFIX
PLASTIC PACKAGE
CASE 710

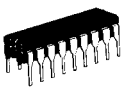
L SUFFIX
CERAMIC PACKAGE
CASE 726

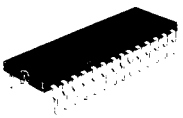
L SUFFIX
28-PIN PACKAGE
CASE 733 - CEROIP

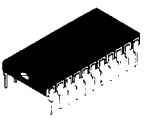
L SUFFIX
CERAMIC PACKAGE
CASE 736

Z SUFFIX
LEADLESS CERAMIC PACKAGE
CASE 753

Z SUFFIX
LEADLESS CERAMIC PACKAGE
CASE 756

Part Number	Function	Suffixes	Pins	Technology	Second Source
MC3416	Crosspoint Switch	L, P	24	Bipolar	
MC3417/3517	Encoder/Decoder	L, P	16	Bipolar	
MC3419	Subscriber Loop Interface Circuit	L	18	Bipolar	
MC3418/3518	Encoder/Decoder	L, P	16	Bipolar	
MC14400X	PCM Codec/Filter Mono-circuit	L	16	Si-Gate CMOS	
MC14401X	PCM Codec/Filter-Mono-circuit	L	18	Si-Gate CMOS	
MC14402X	PCM Codec/Filter Mono-circuit	L, Z	22	Si-Gate CMOS	
MC14404X	PCM Codec, CCITT format	L, P, Z	24	Metal-Gate CMOS	X
MC14406X	PCM Codec, D3 format with signaling	L, P	28	Metal-Gate CMOS	X
MC14407X	PCM Codec, D3 format	L, P, Z	24	Metal-Gate CMOS	X
MC14408X	Binary-to-Phone Pulse-Converter Subsystem	L, P	16	Metal-Gate CMOS	
MC14409X	Binary-to-Phone Pulse-Converter Subsystem	L, P	16	Metal-Gate CMOS	
MC14410X	2-of-8 Tone Encoder	L, P	16	Metal-Gate CMOS	
MC14411X	Bit Rate Generator	L, P	24	Metal-Gate CMOS	
MC14412X	Universal Low-Speed MODEM (0-600 bps)	L, P, F, V	16	Metal-Gate CMOS	
MC6170X	300-Baud Originate Modem Filter	L, P	16	Si-Gate NMOS	
MC14413X1	PCM Filter with transmit bandpass and receive lowpass, CCITT specifications	L, P, Z	16	Metal-Gate CMOS	X
MC14413X2	Same, D3 specifications	L, P, Z	16	Metal-Gate CMOS	X
MC14414X1	PCM Filter with transmit and receive lowpass, CCITT specifications	L, P, Z	16	Metal-Gate CMOS	X
MC14414X2	Same, D3 specifications	L, P, Z	16	Metal-Gate CMOS	X
MC14416X	Time Slot Assigner Circuit	L, P	16	Metal-Gate CMOS	X
MC14417X	Time Slot Assigner Circuit with fixed time slot assignment	L, P	18	Metal-Gate CMOS	X
MC14418X	Time Slot Assigner Circuit	L, P	22	Metal-Gate CMOS	X
MC14419X	2-of-8 Keypad-to-Binary Encoder	L, P	16	Metal-Gate CMOS	
MC34019	Subscriber Loop Interface Circuit	L	18	Bipolar	
MC145100X*	4 × 4 × 1 Crosspoint Switch	L, P	16	Metal-Gate CMOS	
MC142100X*	4 × 4 × 1 Crosspoint Switch	L, P	16	Metal-Gate CMOS	X
TCA3381	Ring Signal Energy Recovery	P	8	Bipolar	
TCA3382	Ring Detector and Speaker Driver	P	24	Bipolar	
TCA3383	Transmission Circuit	P	28	Bipolar	

* Number of pins applies only to L or P package.

** A = Extended operating temperature range.
C = Limited operating temperature range.

Package suffixes and Information

L – Ceramic
P – Plastic
Z – Chip carrier
F – 4.75 to 15 Vdc
V – 4.75 to 6.0 Vdc

Consumer Linear Circuits

... reflecting Motorola's continuing commitment to semiconductor products necessary for Television, Audio, Radio, Refrigerator, Washing Machine, Power Tool, and Automotive Applications.

Table of Contents

	Page
TV and Radio	12-2
Appliance	13-1
Automotive	14-1

TV and Radio

Television Subsystems

FUNCTION	FEATURES	CASE	TYPE
MONOMAX - 1-Chip TV	Include video IF, detector, AGC, video amplifier, horizontal processor, vertical processor, and sync for 525 line systems	710-02	MC13001
	Same as above except for 625 line systems	710-02	MC13002
	Same as MC13001, but reverse AGC	710-02	MC13008
	Same as MC13002, but reverse AGC	710-02	MC13009
Sound IF, Low Pass Filter, Detector, dc Volume Control, Preamplifier, Power Amplifier	Complete TV sound system; 100 μV, 3 dB limiting sensitivity, 4 Watts output; V_{CC} = 24 V; R_L = 16 Ω	648C	TDA3190P
	Same as TDA3190P except for 750 mW output	648C	TDA1190P

Video

1st and 2nd Video IF Amplifier	IF gain at 45 MHz = 60 dB typ, AGC range = 70 dB min	626	MC1349

Chroma I

Dual Chroma Demodulator	Dual doubly balance demodulator with RGB output matrix and PAL switch	646	MC1327AP
Chrominance PAL Control	Internal supply line stabilization, 20 dB ACC range. Designed to be used in conjunction with TBA396 and MC1327AP	646	TBA395
Luminance & Chrominance	DC control of brightness, contrast and saturation. Beam current limiting. Black level clamping	646	TBA396
PAL Chroma Processing System	Internal supply stabilization, 30 dB ACC range, ± 400 Hz min-Oscillator pull in, 2 Vpp output	646	TDA3950A

Chroma III

PAL, NTSC Decoder	Full multi-standard capability, on screen display (with fast blanking), three DC high impedance user controls, automatic black level set-up, beam current limiting. Low dissipation (typically 600 mW)	711	TDA3300
Secam Adaptor	Expands TDA3300 to Secam, on-chip NTSC hue control, electronic on-chip Pal-Secam switching. Low dissipation (typically 400 mW)	710	TDA3030

Chroma IV

PAL, NTSC Decoder	Full multi-standard capability, on chip contrast, brightness and saturation controls, automatic black level set-up, on chip NTSC hue control, low dissipation (typically 600 mW)	711	TDA3301
Secam Adaptor	Same features as TDA3030, plus on chip tracking trap, coiless application circuit	710	TDA3031

Deflection

FUNCTION	FEATURES	CASE	TYPE
Horizontal Processor	Includes line oscillator, noise gated sync. separator, phase comparator loop gain and time constant switching	648	TBA920, S

Sound

Sound IF Detector, dc Volume Control, Preamplifier	Excellent AMR, interchangeable with CA3065	646	MC1358
Sound IF Detector-Limiter	30 μV, 3 dB limiting at 5.5 MHz, 1 V (RMS) output, improved DC volume control	646	TBA120C
Sound IF, Low Pass Filter, Detector, dc Volume Control, Preamplifier	Complete TV sound system; 100 μV, 3 dB limiting sensitivity; 4 Watts output; V_{CC} = 24 V; R_L = 16 Ω	648C	TDA3190P
	750 mW output	648C	TDA1190P
Stereo Sound Control System	Stereo balance, volume, bass, treble control. Low component count. Supply voltage 8-18 V	707	TCA5550

TV Tuning and Control Circuits

Linear Processor Circuit for Tuning Memory System	– Active filter for D/A conversion of tuning voltage – Regulation of operation voltages – Band decoder and direct tuner drivers (35 mA) – TV station capture control – AFC output	724	UAA1008A-DP
Linear Control Chip for Frequency Synthesizer System	– Interface between a NMOS PLL frequency synthesizer chip and a varicap diode tuner	707	MC2801*
Phase Locked Loop Synthesizer and Driver for Frequency Synthesizer System	– 14-bit variable divider and 4-bit band select – PLL and frequency comparator – Filter and tuning voltage amplifier – 16 MHz max. input frequency – 4 MHz reference. Buffered output – Pin option for 125 KHz or 62.5 KHz resolution – 4 band driver outputs (35 mA)	724	UAA2000A
16-Line to 4-Bit Diode Matrix Binary Encoder	– Local encoder for remote control receivers MC6526 and MC6529	648	SAA1006
Limiting Amplifier and PLL Demodulator for PSK Remote Control Signals	– FSK demodulator – No adjustments – RC oscillator – High input impedance – High sensitivity	646	TBA2110
Synthesizer Amplifier and Driver in Bipolar 1^2L Technology	– Direct tuner driver from 4 band drivers – 60 mA band driver capability – Direct control of the tuner's varicap diode	648	UAA2001
Synthesizer Amplifier and Driver in Bipolar 1^2L Technology	– Direct tuner drive from 4 band drivers – Direct control of the tuner varicap diode – Interface for external open collector band drivers – Extremely low input current (1 nA typ.)	648	UAA2010
16-Segment Led Driver	– Led brightness control voltage – Current source segment driver output (so no external resistor for segment currents) – No multiplexing (no RFI) – Reliable data transfer from microprocessor – Cascadable	724	UAA2022

* To be introduced

Sound IF – Audio and Radio Circuits

FUNCTION	FEATURES	CASE	TYPE
Sound IF, Detector Limiter	– 30 μV, 3 dB limiting at 5 MHz, 1 V (RMS) output – Improved DC control	646	TBA120C

Decoders

FUNCTION	Channel Separation dB Typ	TDH % TYP	STEREO INDICATOR	FEATURES	CASE	TYPE
FM Multiplex Stereo Decoder	40	0.3	75	Coiless operation	646	MC1310
FM Multiplex Stereo Decoder	47		50	6 Volt operation	646	MC1309
FM Multiplex Stereo Decoder	45	0.2	100	Variable blend	648	TCA4500A
FM Multiplex Stereo Decoder	45	0.9	100	8 Volt operation	648	UA758A

IF Amplifiers – Radio

FUNCTION	GAIN AT 10.7 MHz dB TYP	3 dB LIMITING AT 10.7 MHz μV (RMS) TYP	AMR dB TYP	RECOVERED AUDIO OUTPUT f = ± 75 KHz mV (RMS)	POWER SUPPLY VOLTS MAX	CASE	TYPE
Low-Power FM-IF for Dual Conversion Scanning Receivers	–	5.0	50	350 (f= ± 3.0 KHz)	8.0	648	MC3357
Hi Gain Low Power Narrow Band FM	100	2.0	40	700	12	701-01	MC3359

Radio Frequency Synthesizer Circuits

FUNCTION	FEATURES	CASE	TYPE
Two Moduls Prescaler	Divide-by-15 and 16. Toggle frequency = 140 MHz	626	MC3393
Divide-by-20 Prescaler	200 MHz toggle frequency	626	MC3396
AM/FM Linear Prescaler Circuit for Radio Frequency Synthesizer System	– Divide by 80/82 operation to 120 MHz (FM) – Divide by 10/11 operation to 20 MHz (AM) – High input sensitivity	646	UAA2002
Phase Locked Loop Interface Circuit for Radio Frequency Synthesizer System	– Direct switching (10 mA) of up to 5 bands – Tuning voltage output – Frequency discriminator analyser	648	UAA2003

Attenuator

FUNCTION	VCC RANGE Vdc	THD %TYP	V dB TYP	ATTENUATION RANGE dB TYP	CASE	TYPE
Electronic Attenuator	9.0–18	0.6	13	90	626	MC3340
Low Noise Electronic Attenuator	6.0–30	< 0.1	0	+20 to −100	623	MC3341*

Transistor Array

FUNCTION	$I_{C(max)}$ mA	V_{CEO} VOLTS MAX	V_{CBO} VOLTS MAX	V_{EBO} VOLTS MAX	CASE	TYPE
One Differentially Connected Pair and Three Isolated Transistors	50	15	20	5.0	646	MC3346 MC3386

* To be introduced

Modulators

FUNCTION	FEATURES	CASE	TYPE
Color TV Video Modulator	Includes Chroma oscillator and clock driver, lead and lag network, chroma modulator, RF oscillator, and modulator	646	MC1372
	Includes RF oscillator and modulator	626	MC1373
TV Modulator (Hi Quality)	Includes RF oscillator/modulator, and FM sound oscillator/modulator	646	MC1374
FM Modulator	Includes FM oscillator and modulator Ideal for base station/cordless telephone applications	626	MC1376

Power Supply Control

Flyback Converter Regulator Control Circuit	Wide operational range, high-voltage stability, direct control of switching transistors, low start-up current, reverse linear overload characteristic curve	SIP9	TDA4600

Power Amplifiers

FEATURES	P_Q Watts	V_{CC} Vdc max.	Vin rated P_o mV typ	I_D mA typ	R_L Ohms	CASE	TYPE
Audio Power Amplifiers	0.5 8.0	15 28	30 50	40 55	80 2.0	625 314A 314B	MC1306 TDA2002

Tone Control

FUNCTION	FEATURES	CASE	TYPE
Tone Control	– Stereo balance, volume, bass, treble control – Low component count – Supply voltage 8–13 V	701	TCA5500

Subsystems

AM Radio Receiver	RF amplifier, AGC mixer, oscillator 1st IF amplifier, 2nd IF amplifier and detector	648	HA1199
FM/AM 1-Chip Radio Receiver	– Wide operating supply voltage range (1.8 V to 8 V) – Complete 1-chip FM/AM radio receiver system – Low external component count – Low distortion (FM = 0.15% typ; AM = 0.35% typ) – High sensitivity	701	MC2828*

* To be introduced

Appliance

Zero Voltage Switch Circuits

UAA 1004-CM (T_A= −55 to +125°C), Case 601
UAA 1004-DP (T_A= −20 to +75°C), Case 626

Designed for use in high volume AC power switching applications with output drive capable of triggering SCR's or triacs. Other operational features include high impedance input differential amplifier, high power, asymmetric gate trigger pulses for power saving with internal current limitation (negative pulses).

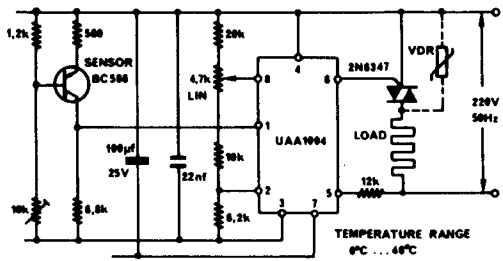

UAA 1016 A, B (T_A=0 to 70°C), Case 626

This device is designed for triggering a thyristor at zero ac line crossing. The IC can be powered directly from the line with dropping resistor and features an input comparator with failsafe threshold and ramp generator, making this device ideal for proportional heating control and many other power control and cycling applications.

- A-version for the linear ramp generator as a current source
- B-version as a voltage source

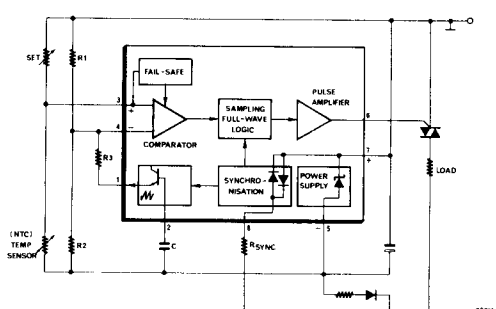

Stepper Motor Driver Circuit

SAA 1042, A (T_A=0 to 70°C), Case 721

The SAA 1042 circuit is designed for driving a two-phase Stepper Motor in bipolar drive mode. The device contains three input stages, logic section and two output stages.

- Drive stage designed for motor voltages of 6 to 12 V (24 V, A-version)
- 500 mA/$_{coil}$ current drive capability
- Built-in clamp diodes for overvoltage suppression
- Large variation of logical supply voltage (V_{CC}=5 V to 18 V)
- Commands for CW/$_{CCW}$ and full/half-step operations
- Schmitt trigger inputs compatible with many popular families like MOS, TTL, DTL. The threshold is set internally by V_{CC}
- Set input for defined output state
- Drive stage bias in according to motor power dissipation for best efficiency
- Angel power plastic package: 16 pins

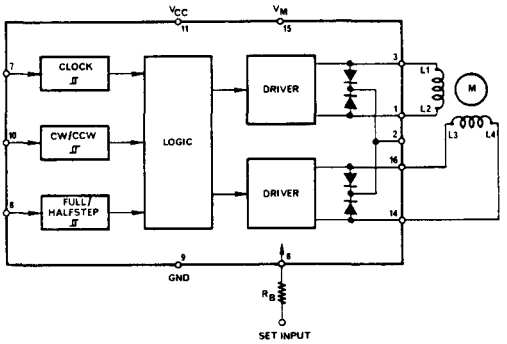

Motor Speed Control Circuits

TDA 1085 C (T_A=0 to 70°C), Case 648

Universal (ac series) Motor Speed Controller is designed for open or closed loop control by varying the phase angle of triac trigger pulses. The IC includes an internal voltage regulator, motor acceleration ramp generators, speed detector and trigger pulse circuitry for complete motor control with a minimum of external components.

It is a very useful circuit for washing machines.

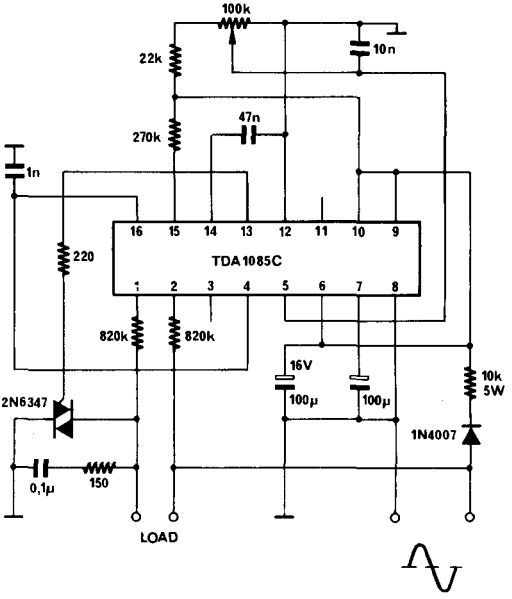

TDA 1185 (T_A = 0 to 70°C), Case 646

Triac Firing Angle Control Circuit generates gate trigger pulses for full-wave phase control. Feedback loop control and soft start circuitry are featured. Motor speed controls and power circuitry start-up control are a few of the many applications this device can serve.

It is a very useful circuit for low cost applications.

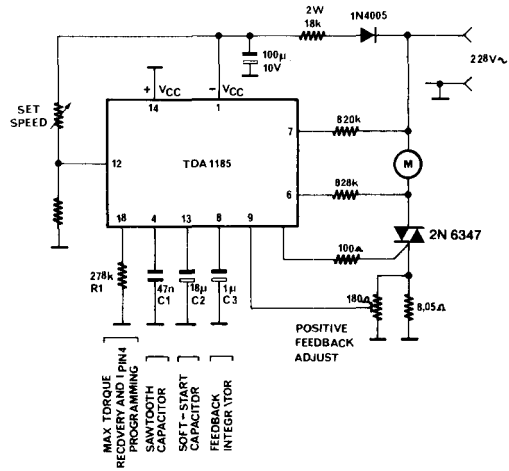

TDA 1285 (T_A=0 to 70°C), Case 648

This IC provides all the functions necessary for speed control of universal motors in a closed or open loop configuration. Although the TDA 1285 is primarily aimed for home appliances, it is equally useful for power tool motor control and a wide range of applications. Note that this circuit has been designed with hall effect and inductive sensor capabilities.

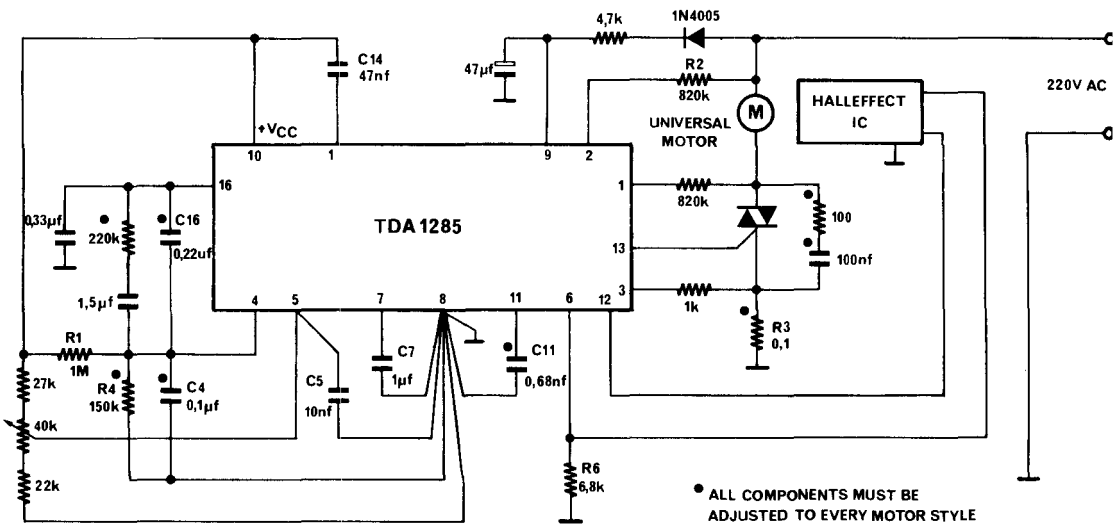

Automotive

Voltage Regulator

FUNCTION	FEATURES	CASE	TYPE
Automotive Voltage Regulator	Designed for use with NPN darlington, overvoltage protection; 'open sense' shut down; selectable temperature coefficient for use in a floating field alternator charging system	646	MC3325

Electronic Ignition

Electronic Ignition System	Designed for use in high energy variable dwell electronic ignition systems with variable reluctance sensors. Dwell and spark energy are externally adjustable	646	MC3333
Electronic Ignition Circuit	Improved version of MC3333	646	MC3334

Special Functions

Programmable Frequency Switch (Engine RPM Switch)	Wide input frequency range (10 Hz to 100 KHz) Adjustable hysteresis Wide supply operating range (7 to 24 V)	646,632	MC3344
Injector Driver	Pulse power driver for use in automotive fuel injection systems	3148	MC3484

Power Transistors Bipolar and MOSFETs

MOTOROLA, the world's largest Power Transistor supplier, offers you devices for almost every application.

From our range of 9 technologies and 9 standard packages we have selected 600 devices which fulfill the majority of requirements for cost-effective new designs. In case you do not find a satisfactory device, please ask us; we have hundreds of other standard products and special capabilities. During 1982 many new devices, including state of the art products, will be introduced.

Our extensive facility in TOULOUSE-FRANCE, ensures you have available local manufacturing, service and innovation of unique products for the European market.

Table of Contents

	Page
High voltage switching Darlingtons	15-2
High voltage switching Transistors > 600 V Vces	15-2
High voltage switching Transistors ≤ 600 V Vces	15-3
General purpose Darlingtons	15-3
General purpose Transistors ≥ 10 Amps	15-4
General purpose Transistors < 10 Amps	15-5
High FT Drivers and switching Transistors ≤ 200 V	15-6
High FT Drivers and switching Transistors (Planar)	15-7
High voltage switching Transistor (Planar)	15-7
High FT Darlingtons (Planar)	15-7
High S.O.A. Power Transistors	15-8
Switchmode II, Transistors	15-9
Switchmode III, Transistors	15-9
High Current Package	15-10
TMOS Power FETs	15-11
Shortform Characteristics by Device	15-14

HIGH VOLTAGE SWITCHING DARLINGTONS (NPN) (WITH SPEED UP DIODE)

IC \ VCES	400	450	475	500	550	600	650	700	850	1000	1400	Pd Tc = 25° C	PACKAGE
7	BU522*	BU522A*	BU522B*									75	TO220
8									BUT50P			107	TO218
10		MJ10002+ MJ10006		MJ10003+ MJ10007 BU323*		BU323A*	MJ10013	MJ10014				150 150 175	TO3 TO3 TO3
12											BUT16	150	TO3
15									BUT51P			125	TO218
20		MJ10000+ MJ10004		MJ10001+ MJ10005			MJ10008	MJ10009		BUT15 MJ10024	MJ10025 (1200V)	175	TO3
24											BUT36	200	TO3/C197
25									BUT14			175	TO3
28						BUT13						175	TO3
40		MJ10022				MJ10023				BUT35		250	TO3/C197
50						MJ10015	MJ10016		BUT34			250	TO3/C197
60	MJ10020 (300 V) MJ10021 (350 V)					BUT33						250	TO3/C197

Legend: * indicates automotive ignition types.
+ indicates without speed up diode.

HIGH VOLTAGE SWITCHING TRANSISTORS (VCES > 600 V - NPN - MESA)

+ indicates: integrated C.E. diode

IC \ VCES	650	700	750	800	850	900	1000	1500	1700	Pd Tc = 25° C	PACKAGE
1.5		MJE13003			MJE13003A					40	TO126 Reverse
2				BUX84				BUX85		50	TO220
2.5								BU205		56	TO3
3.5					BUX46					85	TO3
4		MJE13005			MJE13005A					75	TO220
5	2N6542 MJ4400			BUX82	2N6543 MJ4401		BUX83	BU800+ BU208D+ BU208A BU208 BU508 BU508A		60 60 84 100 60 60 100	TO3 TO3 TO3 TO3 TO3 TO3 TO66
6				BU326		BU326A			BU209	60 90	TO3 TO3
8	2N6544 MJE13007	2N6308			2N6545 MJE13007A					125 80	TO3 TO220
8.5					BUX47					107	TO3
10				BUY69B BUX80			BUX81 MJ8504 (1200)	BUY69A MJ8505 (1400)		100 114 175	TO3 TO3 TO3
12		MJE13009			MJE13009A		BUX48A			100 125	TO220 TO3
15	2N6546				BUX48 2N6547					125 175	TO3 TO3
20	MJ13332	MJ13333	MJ13334	MJ13335	MJ16010/12					175	TO3

HIGH VOLTAGE SWITCHING TRANSISTORS (VCES ≤ 600 V) NPN MESA PNP PLANAR

BVCES / IC	250	275	300	350	375	400	450	500	600	Pd Tc = 25°C	PACKAGE
1	2N3583 2N6420 (PNP)		2N5344 2N5345	TIP47		TIP48	TIP49	TIP50		35 35 40 40 40	TO66 TO66 TO66 TO66 TO220
1.5									MJE13002	40	TO126 Reverse
2				(PNP) 2N6212	2N6421 (PNP) 2N3584	(PNP) 2N6213		2N6422 (PNP) 2N3585		35 35	TO66 TO66
4									MJE13004	75	TO220
5	2N6233		2N6234	2N6497 MJE51T 2N6235		2N6498 MJE52T	2N6499 MJE53T	BUX45		80 80 50 120	TO220 TO220 TO66 TO3
7				BU407		BU406				60	TO220
8			MJ6502 (PNP)	MJE5850 (PNP)		MJE5851 (PNP)	MJE5852 (PNP) BUX44 MJ6503 (PNP)	2N6306 BUX15 CECC	MJE13006 2N6307	80 120 125 150	TO220 TO3 TO3 TO3
10						BUX43	BUX14 CECC			120/150	TO3
12									MJE13008	10	TO220
15			2N6249		2N6250	BUX13 CECC	2N6251	BUV25		150 175 250	TO3 TO3 TO3 (C197)
20			BUV12 BUX12 CECC			MJ13330	MJ13331 BUV24			175 250	TO3 TO3 (C197)
30						BUV23				250	TO3 (C197)

GENERAL PURPOSE DARLINGTONS (EPIBASE) NPN/PNP

BVCEO / IC	45		60		80		100		120		Pd	PACKAGE
	NPN	PNP	NPN	PNP	NPN	PNP	NPN	PNP	NPN	PNP	Tc = 25°C	
4	BD675 BD675A	BD676 BD676A	BD677 BD677A MJE800T MJE801T	BD678 BD678A MJE700T MJE701T	BD679 BD679A MJE802T MJE803T	BD680 BD680A MJE702T MJE703T	BD681	BD682			40 40 50 50	TO126 TO126 TO220 TO220
8	BDX53 BD895 BD895A	BDX54 BD896 BD896A	BDX53A BD897 BD897A 2N6300 MJ1000 2N6055	BDX54A BD898 BD898A 2N6298 MJ900 2N6053	BDX53B BD899 BD899A 2N6301 MJ1001 2N6056	BDX54B BD900 BD900A 2N6299 MJ901 2N6054	BDX53C BD901 BDX63B	BDX54C BD902 BDX62B			60 70 70 75 90 100	TO220 TO220 TO220 TO66 TO3 TO3
10	BDX33	BDX34	BDX33A BDV65 MJ3000	BDX34A BDV64 MJ2500	BDX33B BDV65A MJ3001	BDX34B BDV64A MJ2501	BDX33C BDV65B	BDX34C BDV64B			70 125 150	TO220 TO218 TO3
12			2N6057	2N6050	2N6058	2N6051	2N6059	2N6052	BDX65C	BDX64C	117 150	TO3 TO3
15	BDW39	BDW44	BDW40 2N6576	BDW45	BDW41 2N6577	BDW46	BDW42	BDW47 2N6578			85 120	TO220 TO3
16			MJ4033	MJ4030	MJ4034	MJ4031	MJ4035	MJ4032	BDX67C	BDX66C	150	TO3
20			2N6282	2N6285	2N6283	2N6286	2N6284	2N6287			160	TO3
30			MJ11012	MJ11011	MJ11014 (90 V)	MJ11013 (90 V)			MJ11016	MJ11015	200	TO3
50			MJ11028	MJ11029	MJ11030 (90 V)	MJ11031 (90 V)			MJ11032	MJ11033	300	TO3 (C197)

GENERAL PURPOSE TRANSISTORS ≥ 10 Amps

IC \ BVCEO	40		45		60		80		Pd	PACKAGE
	NPN	PNP	NPN	PNP	NPN	PNP	NPN	PNP	Tc = 25°C	
10			BD245 BD805	BD246 BD806	MJE3055T BD245A BD807 MJE3055 BD311 2N3715 2N5877	MJE2955T BD246A BD808 MJE2955 BD312 2N3791 2N5875	BD245B BD809 2N3716 BD313 2N5878	BD246B BD810 2N3792 BD314 2N5876	75 80 90 90 115 150 150 150	TO220 TO218 TO220 TO127 TO3 TO3 TO3 TO3
15	2N6486	2N6489			2N6487 TIP3055 2N3055 2N3055A	2N6490 TIP2955 MJ2955	2N6488	2N6491	75 90 115 115	TO220 TO218 TO3 TO3
16							BD315	BD316	150	TO3
20			BD745	BD746	BD745A	BD746A	BD745B 2N5303	BD746B 2N5745	115 200	TO218 TO3
25			BD249	BD250	BD249A 2N5885	BD250A 2N5883	BD249B 2N5886	BD250B 2N5884	125 200	TO218 TO3
30	2N5301 2N3771	2N4398			2N5302 2N3772	2N4399	MJ802	MJ4502	200 150	TO3 TO3
50					2N5685	2N5683	2N5686	2N5684	300	TO3 (C197)
70					MJ14000	MJ14001	MJ14002	MJ14003	300	TO3 (C197)

IC \ BVCEO	100		120		140		Pd	PACKAGE
	NPN	PNP	NPN	PNP	NPN	PNP	Tc = 25°C	
10	BD245C 2N5632 MJE4340	BD246C 2N6229 MJE4350	2N5633 MJE4341	2N6230 MJE4351	2N4634 MJE4342	2N6231 MJE4352	80 150 125	TO218 TO3 TO218
15			MJ15015	MJ15016	MJ15001	MJ15002		
16	BD317 2N5629	BD318 2N6029	2N5630	2N6030	2N3773 2N5631	2N6609 2N6031	150 200	TO3 TO3
20	BD745C	BD746C			MJ15003	MJ15004	115 250	TO218 TO3
25	BD249C	BD250C					125	TO218

GENERAL PURPOSE TRANSISTORS < 10 Amps

BVCEO / IC	30		40		45		Pd	PACKAGE
	NPN	PNP	NPN	PNP	NPN	PNP	Tc = 25° C	
1			2N4910 2N4921	 2N4918			25 30	TO66 TO126
1.5					BD165	BD166	20	TO126
2					BD233 BD239	BD234 BD240	25 30	TO126 TO220
3	MJE520	MJE370			 BD175 BD241	 BD176 BD242	25 30 40	TO126 TO126 TO220
4	BD433 (22 V) BD435 (32 V) BD185	BD434 (22 V) BD436 (32 V) BD186	2N5190	MJE371 2N5193	BD437 BD187 2N6121 BD533 2N3054 (55 V)	BD438 BD188 2N6124 BD534 2N6049 (55 V)	36 36 40 40 40 50 75	TO126 TO126 TO126 TO126 TO220 TO220 TO66
6					BD243	BD244	65	TO220
7					2N6290 (50 V)	2N6109 (50 V)	65	TO220
8					BD795	BD796	65	TO220

BVCEO / IC	60		80		100		Pd	PACKAGE
	NPN	PNP	NPN	PNP	NPN	PNP	Tc = 25° C	
1	2N4911 2N4922	 2N4919	2N4912 2N4923	 2N4920			25 30	TO66 TO126
1.5	BD167	BD168	BD169	BD170			20	TO126
2	BD235 BD239A	BD236 BD240A	BD237 BD239B	BD238 BD240B	 BD239C	 BD240C	25 30	TO126 TO220
3	BD177 BD241A	BD178 BD242A	BD179 BD241B	BD180 BD242B	 2N3441 (140 V) BD241C	 BD242C	30 25 40	TO126 TO3 TO220
4	2N3766 BD439 BD189 2N5191 2N6122 BD535	 2N3740 BD440 BD190 2N5194 2N6125 BD536	2N3767 BD441 2N5192 2N6123 BD537	 2N3741 BD442 2N5195 2N6126 BD538			20 25 36 40 40 40 50	TO66 TO66 TO126 TO126 TO126 TO220 TO220
6	BD243A	BD244A	BD243B	BD244B	BD243C	BD244C	65	TO220
7	2N6292 (70 V) 2N6315	2N6107 (70 V) 2N6317	 2N6316	 2N6318			65 90	TO220 TO66
8	BD797	BD798	BD799	BD800	BD801	BD802	65	TO220

HIGH FT DRIVERS AND SWITCHING TRANSISTORS
≤ 200 V BVCEO PLANAR

IC \ BVCEO	60	75	80	90	100	120	Pd Tc = 25° C	PACKAGE
1.5	BD137 BD138 (PNP)		BD139 BD140 (PNP)				12.5	TO126
4	BD787 BD788 (PNP)		MJE240 MJE250 (PNP) MJE241 MJE251 (PNP) BD789 BD790 (PNP)		MJE243 MJE253 (PNP) BD791 BD792 (PNP)		15 15 15 15 15 15	TO126 TO126 TO126 TO126 TO126 TO126
7			2N5427 2N5428		2N5429 2N5430		40	TO66
8						MJE15028 MJE15031 (PNP)	50 50	TO220 TO220
10	BDY92			BDY91		BDY90	75	TO3
20		2N5039		BUV26 2N5038		BUV27 BUS36	85 90 140	TO220 TO220 TO3
25					2N6338	2N6339	200	TO3
30				BUX39			120	TO3
50			2N6274	2N6275			250	TO3/C197

IC \ BVCEO	125	140	150	160	175	200	Pd Tc = 25° C	PACKAGE
2	2N5050		2N5051			2N5052	40	TO66
8			MJE15030 MJE15031 (PNP)				50 50	TO220 TO220
15						BUX41	120	TO3
18				BUX41N			120	TO3
20	BUX40		BUS37	BUV11N		BUV11 BUX11CECC	120 150 90	TO3 TO3 TO220
25	BUV10 BUV10N BUX10CECC	2N6340	2N6341				200	TO3
40				BUV21N		BUV21	250/150	TO3/C197
50	BUV20	2N6276	2N6277				250	TO3/C197

HIGH FT DRIVERS AND SWITCHING TRANSISTORS (PLANAR)

BVCEO / IC	30		45		60		80		100		Pd	PACKAGE
	NPN	PNP	NPN	PNP	NPN	PNP	NPN	PNP	NPN	PNP	Tc = 25° C	
1					BD385	BD386	BD387	BD388	BD389	BD390	10	TO202
1.5			BD135	BD136	BD137	BD138	BD139	BD140			12.5	TO126
2	MPSU01	MPSU51			MPSU05	MPSU55	MPSU06	MPSU56	MPSU07	MPSU57	10	UNIWATT
4			BD785	BD786	BD787	BD788	BD789	BD790	BD791	BD792	15	TO126
5	MJE200 (25 V)	MJE210 (25 V)									15	TO126

HIGH VOLTAGE SWITCHING TRANSISTOR (PLANAR)

VCEO / IC	150	160	200	250		300		350		Pd	PACKAGE
	NPN	NPN	NPN	NPN	PNP	NPN	PNP	NPN	PNP	Tc = 25° C	
1				BF787	BF790	BF788	BF791	BF789	BF792	10	TO202
5				BF757	BF760	MPSU10 BF758 MJE340	MPSU60 BF761 MJE350	BF759	BF762	10 10 20	UNIWATT TO202 TO126
1	BF466		BF467	BF468 2N5655		2N5656		2N5657		10 20	TO202 TO126
5	BUY49P									20	TO126

HIGH FT DARLINGTONS (PLANAR)

BVCEO / IC	40		45		60		80		Pd	PACKAGE
	NPN	PNP	NPN	PNP	NPN	PNP	NPN	PNP	Tc = 25° C	
2	BD411 BD412 MPSU45	BD413 BD414 MPSU95							10 10 10	TO202 TO202 UNIWATT
4			BD775	BD776	BD777	BD778	BD779	BD780	15	TO126

POWER BASE GENERAL PURPOSE TRANSISTORS WITH EXTRA S.O.A. CAPABILITY

Vcec / Ic	100 V		120 V		140 V		160 V		200 V		250 V		Pd	PACKAGE
	NPN	PNP	NPN	PNP	NPN	PNP	NPN	PNP	NPN	PNP	NPN	PNP	Tc = 25°C	
10	MJE4340	MJE4350	MJE4341	MJE4351	MJE4342	MJE4352	MJE4343	MJE4353			MJ15011	MJ15012	125 200	TO218 TO3
15	BDW10		MJ15015 BDW12	MJ15016	MJ15001 BDW14	MJ15002	BDW16						180	TO3
16					2N3773	2N6609			MJ15022 MJ15026	MJ15023 MJ15027	MJ15024	MJ15025	200 250 250	TO218 TO3 TO3
20					MJ15003	MJ15004							250	TO3
30	BDW30		BDW32		BDW34		BDW36						250	TO3

SWITCHMODE II, TRANSISTORS

New Triple Diffused Technology, featuring:

– Thin Base ... lower Tf
– Narrow Emitter Fingers ... Lower Ts
– Faster Switching Times
– Improved RBSOA

IC max	VCEO 450		PACKAGE
	VCEV	VCEV	
(Amp)	850	1000	
3	BUS45P		TO-220
5	BUS46P		TO-220
9	BUS47P BUS47	BUS47AP BUS47A	TO-218 TO-3
15	BUS48P BUS48	BUS48AP BUS48A	TO-218 TO-3
20	BUS97	BUS97A	TO-3
30	BUS98	BUS98A	TO-3

SWITCHMODE III, TRANSISTORS

Same as Switchmode II with new Emitter Diffusion Process

– Very Fast
– Very Good RBSOA

VCEO(sus) = 450 V VCES = 850 V

IC max (Amp)	DEVICE	PACKAGE
5	MJE16002 MJE16004 MJ16002 MJ16004	TO-220 TO-220 TO-3 TO-3
8	MJ16006 MJ16008	TO-3 TO-3
15	MJ16010 MJ16012	TO-3 TO-3
20	MJ16014 MJ16016	TO-3 TO-3

HIGH CURRENT PACKAGE—500 W

- Designed for Severe Industrial Use
- Characterized for 100% Use
- Surge Current 500% of Ic
- Meets U/L Standards
- Easy Mounting
- Minimum Cost
- New Over Load Safe Operating Areas Non Repetitive

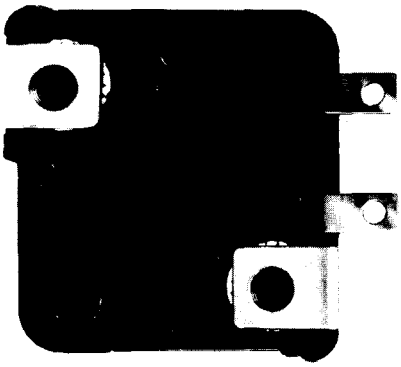

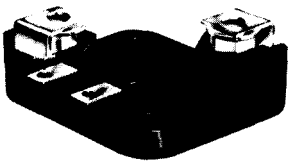

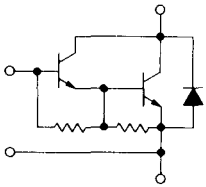

Electrical Characteristics

	Ic (OP) (AMP)	BVCEO (SUS) (VOLT)	VCESAT (VOLT)	at Ic/IB at 100 °C (AMP)	VF at Ic VOLT	PD (WATT)
MJ10050	50	850	2.0	50/4	1.5	
MJ10051*	50	850	2.0	50/5		
MJ10100	100	450	2.0	100/3.3	1.5	500
MJ10101*	100	450	2.0	100/3.3		
MJ10200	200	250	2.0	200/5.5	2	
MJ10201*	200	250	2.0	200/5.5		

* Fast Darlingtons with Speed-up Diode

TMOS Power FETs

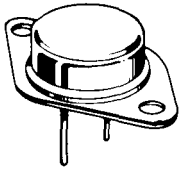

CASE 1-05
(TO-3 TYPE)

TO-3 TYPE TMOS POWER FETs

ID / BVDSS	1 A 2 A	3 A	4 A	5 A	7 A	8 A	10 A	12 A	15 A
1000	MTM1N100 (10)								
950	MTM1N95 (10)								
900	MTM2N90 (8.0)								
850	MTM2N85 (8.0)								
600		MTM3N60 (2.8)							
550		MTM3N55 (2.8)							
500	MTM2N50 (4.0)		MTM4N50 (2.0) MTM475 (2.25)		MTM7N50 (1.0)				
450	MTM2N45 (4.0)		MTM4N45 (2.0) MTM474 (2.25)		MTM7N45 (1.0)				
400		MTM3N40 (3.3)		MTM5N40 (1.5) MTM565 (1.5)		MTM8N40 (0.8)			MTM15N40 (0.4)
350		MTM3N35 (3.3)		MTM5N35 (1.5) MTM564 (1.5)		MTM8N35 (0.8)			MTM15N35 (0.4)
200						MTM8N20 (0.5)			
180						MTM8N18 (0.5)			
150						MTM8N15 (0.5)	MTM10N15 (0.3) MTM1035 (0.3)		
120						MTM8N12 (0.5)	MTM10N12 (0.3) MTM1034 (0.3)		
100							MTM10N10 (0.33)	MTM12N10 (0.2)	
80							MTM10N08 (0.33)	MTM12N08 (0.2)	
60								MTM12N06 (0.2)	
50								MTM12N05 (0.2)	

Note: The numbers into brackets are the RDS (on) max guaranteed at Id/2

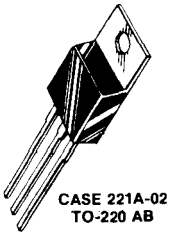

CASE 221A-02
TO-220 AB

TO-220 TMOS POWER FETs

Id BVDSS	1 A	2 A	3 A	4 A	5 A	7 A	8 A	10 A	12 A
1000	MTP1N100 (10)								
950	MTP1N95 (10)								
900		MTP2N90 (8)							
850		MTP2N85 (8)							
600			MTP3N60 (2.5)						
550			MTP3N55 (2.5)						
500		MTP2N50 (4)		MTP4N50 (2.0) MTP475 (2.25)					
450		MTP2N45 (4)		MTP4N45 (2) MTP474 (2.25)					
400			MTP3N40 (3.3)		MTP5N40 (1.5) MTP565 (1.5)				
350			MTP3N35 (3.3)		MTP5N35 (1.5) MTP564 (1.5)				
200							MTP8N20 (0.5)		
180							MTP8N18 (0.5)		
150							MTP8N15 (0.5)	MTP10N15 (0.3) MTP1035 (0.3)	
120							MTP8N12 (0.5)	MTP10N12 (0.3) MTP1034 (0.3)	
100								MTP10N10 (0.33)	MTP12N10 (0.2) MTP1225 (0.25)
80								MTP10N8 (0.33)	MTP12N08 (0.2) MTP1224 (0.25)
60								MTP10N06 (0.28)	MTP12N06 (0.2)
50								MTP10N05 (0.28)	MTP12N05 (0.2)

Note: The numbers into brackets are the RDS (on) max gueranteed at Id/2

TMOS P-CHANNEL

ID	BVDSS	DEVICE	Rds (on) at Id/2	PACKAGE
	500	MTM2P50 MTP2P50	6.0 6.0	TO-3 TO-220
	400	MTM2P45 MTP2P45	6.0 6.0	TO-3 TO-220
	100	MTM815 MTP815	0.4 0.4	TO-3 TO-220
	80	MTM814 MTP814	0.4 0.4	TO-3 TO-220

Motorola Power Transistors Short Form Device Characteristics

DEVICE	Polarity	IC max cont	Vceo sus V	Vcev or Vcbo	Pd W	Hfe min	@ IC amps	Vce sat max	@ IC amps	&	@ Ib amps	tf microsft or Mhz
BDV64	PNP	10.0	60	60	125	1000.0	5.00	2.00	5.00		.020	
BDV64A	PNP	10.0	80	80	125	1000.0	5.00	2.00	5.00		.020	
BDV64B	PNP	10.0	100	100	125	1000.0	5.00	2.00	5.00		.020	
BDV65	NPN	10.0	60	60	125	1000.0	5.00	2.00	5.00		.020	
BDV65A	NPN	10.0	80	80	125	1000.0	5.00	2.00	5.00		.020	
BDV65B	NPN	10.0	100	100	125	1000.0	5.00	2.00	5.00		.020	
BDW10	NPN	15.0	100	140	180	20.000	5.00	1.00	5.00		.500	1(ft)
BDW12	NPN	15.0	120	160	180	20.000	5.00	1.00	5.00		.500	1(ft)
BDW14	NPN	15.0	140	180	180	20.000	5.00	1.00	5.00		.500	1(ft)
BDW16	NPN	15.0	160	200	180	20.000	5.00	1.00	5.00		.500	1(ft)
BDW30	NPN	30.0	100	140	250	20.000	8.00	1.20	8.00		.800	1(ft)
BDW32	NPN	30.0	120	160	250	20.000	8.00	1.20	8.00		.800	1(ft)
BDW34	NPN	30.0	140	180	250	20.000	8.00	1.20	8.00		.800	1(ft)
BDW36	NPN	30.0	160	200	250	20.000	8.00	1.20	8.00		.800	1(ft)
BDW39	NPN	15.0	45	45	85	1000.0	5.00	2.00	5.00		.010	4(ft)
BDW40	NPN	15.0	60	60	85	1000.0	5.00	2.00	5.00		.010	4(ft)
BDW41	NPN	15.0	80	80	85	1000.0	5.00	2.00	5.00		.010	4(ft)
BDW42	NPN	15.0	100	100	85	1000.0	5.00	2.00	5.00		.010	4(ft)
BDW44	PNP	15.0	45	45	85	1000.0	5.00	2.00	5.00		.010	4(ft)
BDW45	PNP	15.0	60	60	85	1000.0	5.00	2.00	5.00		.010	4(ft)
BDW46	PNP	15.0	80	80	85	1000.0	5.00	2.00	5.00		.010	4(ft)
BDW47	PNP	15.0	100	100	85	1000.0	5.00	2.00	5.00		.010	4(ft)
BDX33	NPN	10.0	45	45	70	750.00	4.00	2.50	4.00		.008	3(ft)
BDX33A	NPN	10.0	60	60	70	750.00	4.00	2.50	4.00		.008	3(ft)
BDX33B	NPN	10.0	80	80	70	750.00	3.00	2.50	3.00		.006	3(ft)
BDX33C	NPN	10.0	100	100	70	750.00	3.00	2.50	3.00		.006	3(ft)
BDX34	PNP	10.0	45	45	70	750.00	4.00	2.50	4.00		.008	3(ft)
BDX34A	PNP	10.0	60	60	70	750.00	4.00	2.50	4.00		.008	3(ft)
BDX34B	PNP	10.0	80	80	70	750.00	3.00	2.50	3.00		.006	3(ft)
BDX34C	PNP	10.0	100	100	70	750.00	3.00	2.50	3.00		.006	3(ft)
BDX53	NPN	8.00	45	45	60	750.00	3.00	2.00	3.00		.012	
BDX53A	NPN	8.00	60	60	60	750.00	3.00	2.00	3.00		.012	4(ft)
BDX53B	NPN	8.00	80	80	60	750.00	3.00	2.00	3.00		.012	4(ft)
BDX53C	NPN	8.00	100	100	60	750.00	3.00	2.00	3.00		.012	4(ft)
BDX54	PNP	8.00	45	45	60	750.00	3.00	2.00	3.00		.012	
BDX54A	PNP	8.00	60	60	60	750.00	3.00	2.00	3.00		.012	4(ft)
BDX54B	PNP	8.00	80	80	60	750.00	3.00	2.00	3.00		.012	4(ft)
BDX54C	PNP	8.00	100	100	60	750.00	3.00	2.00	3.00		.012	4(ft)
BDX62B	PNP	8.00	100	100	60	1000.0	3.00	2.00	3.00		.012	
BDX63B	NPN	8.00	100	100	60	1000.0	3.00	2.00	3.00		.012	
BDX64C	PNP	12.0	120	120	117	1000.0	5.00	2.50	5.00		.020	
BDX65C	NPN	12.0	120	120	117	1000.0	5.00	2.50	5.00		.020	
BDX66C	PNP	16.0	120	120	150	1000.0	10.00	2.00	10.00		.400	
BDX67C	NPN	16.0	120	120	150	1000.0	10.00	2.00	10.00		.400	
BDY90	NPN	10.0	100	120	60	20.000	10.00	1.50	10.00		1.000	.20(tf)
BDY91	NPN	10.0	80	100	60	20.000	10.00	1.50	10.00		1.000	.20(tf)
BDY92	NPN	10.0	60	80	60	20.000	10.00	1.00	10.00		1.000	.20(tf)
BD135	NPN	1.50	45	45	12	40.000	.15	.50	.50		.050	
BD136	PNP	1.50	45	45	12	40.000	.15	.50	.50		.050	
BD137	NPN	1.50	60	60	12	40.000	.15	.50	.50		.050	

Motorola Power Transistors Short Form Device Characteristics

DEVICE	Polarity	IC max cont	Vceo sus V	Vcev or Vcbo	Pd W	Hfe min	@ IC amps	Vce sat max	@ IC amps	& @ Ib amps	tf ft	microS or Mhz
BD138	PNP	1.50	60	60	12	40.000	.15	.50	.50	.050		
BD139	NPN	1.50	80	80	12	40.000	.15	.50	.50	.050		
BD140	PNP	1.50	80	80	12	40.000	.15	.50	.50	.050		
BD165	NPN	1.50	45	45	20	15.000	.50	.50	.50	.050		6(ft)
BD166	PNP	1.50	45	45	20	15.000	.50	.50	.50	.050		6(ft)
BD167	NPN	1.50	60	60	20	15.000	.50	.50	.50	.050		6(ft)
BD168	PNP	1.50	60	60	20	15.000	.50	.50	.50	.050		6(ft)
BD169	NPN	1.50	80	80	20	15.000	.50	.50	.50	.050		6(ft)
BD170	PNP	1.50	80	80	20	15.000	.50	.50	.50	.050		6(ft)
BD175	NPN	3.00	45	45	30	15.000	1.00	.80	1.00	.100		3(ft)
BD176	PNP	3.00	45	45	30	15.000	1.00	.80	1.00	.100		3(ft)
BD177	NPN	3.00	60	60	30	15.000	1.00	.80	1.00	.100		3(ft)
BD178	PNP	3.00	60	60	30	15.000	1.00	.80	1.00	.100		3(ft)
BD179	NPN	3.00	80	80	30	15.000	1.00	.80	1.00	.100		3(ft)
BD180	PNP	3.00	80	80	30	15.000	1.00	.80	1.00	.100		3(ft)
BD185	NPN	4.00	30	40	40	15.000	2.00	1.00	2.00	.200		2(ft)
BD186	PNP	4.00	30	40	40	15.000	2.00	1.00	2.00	.200		2(ft)
BD187	NPN	4.00	45	55	40	15.000	2.00	1.00	2.00	.200		2(ft)
BD188	PNP	4.00	45	55	40	15.000	2.00	1.00	2.00	.200		2(ft)
BD189	NPN	4.00	60	70	40	15.000	2.00	1.00	2.00	.200		2(ft)
BD190	PNP	4.00	60	70	40	15.000	2.00	1.00	2.00	.200		2(ft)
BD233	NPN	2.00	45	45	25	25.000	1.00	.60	1.00	.100		3(ft)
BD234	PNP	2.00	45	45	25	25.000	1.00	.60	1.00	.100		3(ft)
BD235	NPN	2.00	60	60	25	25.000	1.00	.60	1.00	.100		3(ft)
BD236	PNP	2.00	60	60	25	25.000	1.00	.60	1.00	.100		3(ft)
BD237	NPN	2.00	80	80	25	25.000	1.00	.60	1.00	.100		3(ft)
BD238	PNP	2.00	80	80	25	25.000	1.00	.60	1.00	.100		3(ft)
BD239	NPN	2.00	45	55	30	15.000	1.00	.70	1.00	.200		3(ft)
BD239A	NPN	2.00	60	70	30	15.000	1.00	.70	1.00	.200		3(ft)
BD239B	NPN	2.00	80	90	30	15.000	1.00	.70	1.00	.200		3(ft)
BD239C	NPN	2.00	100	115	30	15.000	1.00	.70	1.00	.200		3(ft)
BD240	PNP	2.00	45	55	30	15.000	1.00	.70	1.00	.200		3(ft)
BD240A	PNP	2.00	60	70	30	15.000	1.00	.70	1.00	.200		3(ft)
BD240B	PNP	2.00	80	90	30	15.000	1.00	.70	1.00	.200		3(ft)
BD240C	PNP	2.00	100	115	30	15.000	1.00	.70	1.00	.200		3(ft)
BD241	NPN	3.00	45	0	40	10.000	3.00	1.20	3.00	.600		3(ft)
BD241A	NPN	3.00	60	70	40	10.000	3.00	1.20	3.00	.600		3(ft)
BD241B	NPN	3.00	80	90	40	10.000	3.00	1.20	3.00	.600		3(ft)
BD241C	NPN	3.00	100	115	40	10.000	3.00	1.20	3.00	.600		3(ft)
BD242	PNP	3.00	45	0	40	10.000	3.00	1.20	3.00	.600		3(ft)
BD242A	PNP	3.00	60	70	40	10.000	3.00	1.20	3.00	.600		3(ft)
BD242B	PNP	3.00	80	90	40	10.000	3.00	1.20	3.00	.600		3(ft)
BD242C	PNP	3.00	100	115	40	10.000	3.00	1.20	3.00	.600		3(ft)
BD243	NPN	6.00	45	45	65	15.000	3.00	1.50	6.00	1.000		3(ft)
BD243A	NPN	6.00	60	60	65	15.000	3.00	1.50	6.00	1.000		3(ft)
BD243B	NPN	6.00	80	80	65	15.000	3.00	1.50	6.00	1.000		3(ft)
BD243C	NPN	6.00	100	100	65	15.000	3.00	1.50	6.00	1.000		3(ft)
BD244	PNP	6.00	45	45	65	15.000	3.00	1.50	6.00	1.000		3(ft)
BD244A	PNP	6.00	60	60	65	15.000	3.00	1.50	6.00	1.000		3(ft)
BD244B	PNP	6.00	80	80	65	15.000	3.00	1.50	6.00	1.000		3(ft)

Motorola Power Transistors Short Form Device Characteristics

DEVICE	Polarity	IC max cont	Vceo sus V	Vcev or Vcbo	Pd W	Hfe min	@ IC amps	Vce sat max	@ IC amps	@ Ib amps	tf microsft or Mhz
BD244C	PNP	6.00	100	100	65	15.000	3.00	1.50	6.00	1.000	3(ft)
BD245	NPN	10.0	45	45	80	20.000	3.00	1.00	3.00	.300	3(ft)
BD245A	NPN	10.0	60	60	80	20.000	3.00	1.00	3.00	.300	3(ft)
BD245B	NPN	10.0	80	80	80	20.000	3.00	1.00	3.00	.300	3(ft)
BD245C	NPN	10.0	100	100	80	20.000	3.00	1.00	3.00	.300	3(ft)
BD246	PNP	10.0	45	45	80	20.000	3.00	1.00	3.00	.300	3(ft)
BD246A	PNP	10.0	60	60	80	20.000	3.00	1.00	3.00	.300	3(ft)
BD246B	PNP	10.0	80	80	80	20.000	3.00	1.00	3.00	.300	3(ft)
BD246C	PNP	10.0	100	100	80	20.000	3.00	1.00	3.00	.300	3(ft)
BD249	NPN	25.0	45	45	125	10.000	15.00	1.80	15.00	1.500	3(ft)
BD249A	NPN	25.0	60	60	125	10.000	15.00	1.80	15.00	1.500	3(ft)
BD249B	NPN	25.0	80	80	125	10.000	15.00	1.80	15.00	1.500	3(ft)
BD249C	NPN	25.0	100	100	125	10.000	15.00	1.80	15.00	1.500	3(ft)
BD250	PNP	25.0	45	45	125	10.000	15.00	1.80	15.00	1.500	3(ft)
BD250A	PNP	25.0	60	60	125	10.000	15.00	1.80	15.00	1.500	3(ft)
BD250B	PNP	25.0	80	80	125	10.000	15.00	1.80	15.00	1.500	3(ft)
BD250C	PNP	25.0	100	100	125	10.000	15.00	1.80	15.00	1.500	3(ft)
BD311	NPN	10.0	60	60	115	25.000	5.00	1.00	5.00	.500	4(ft)
BD312	PNP	10.0	60	60	115	25.000	5.00	1.00	5.00	.500	4(ft)
BD313	NPN	10.0	80	80	150	25.000	4.00	1.00	5.00	.500	4(ft)
BD314	PNP	10.0	80	80	150	25.000	4.00	1.00	5.00	.500	4(ft)
BD315	NPN	16.0	80	80	200	25.000	8.00	1.00	8.00	.800	1(ft)
BD316	PNP	16.0	80	80	200	25.000	8.00	1.00	8.00	.800	1(ft)
BD317	NPN	16.0	100	100	200	25.000	5.00	1.00	8.00	.800	1(ft)
BD318	PNP	16.0	100	100	200	25.000	5.00	1.00	8.00	.800	1(ft)
BD385	NPN	1.00	60	60	10	60.000	.25	.50	.25	.010	75(ft)
BD386	PNP	1.00	60	60	10	60.000	.25	.50	.25	.010	75(ft)
BD387	NPN	1.00	80	80	10	60.000	.25	.50	.25	.010	75(ft)
BD388	PNP	1.00	80	80	10	60.000	.25	.50	.25	.010	75(ft)
BD389	NPN	1.00	100	100	10	60.000	.25	.50	.25	.010	75(ft)
BD390	PNP	1.00	100	100	10	60.000	.25	.50	.25	.010	75(ft)
BD411	NPN	2.00	40	50	10	15000.	.50	1.50	1.00	.002	100(ft)
BD412	NPN	2.00	40	50	10	10000.	.50	1.50	1.00	.002	100(ft)
BD413	PNP	2.00	40	50	10	15000.	.50	1.50	1.00	.002	50(ft)
BD414	PNP	2.00	40	50	10	10000.	.50	1.50	1.00	.002	50(ft)
BD433	NPN	4.00	22	22	36	50.000	2.00	.50	2.00	.200	3(ft)
BD434	PNP	4.00	22	22	36	50.000	2.00	.50	2.00	.200	3(ft)
BD435	NPN	4.00	32	32	36	50.000	2.00	.50	2.00	.200	3(ft)
BD436	PNP	4.00	32	32	36	50.000	2.00	.50	2.00	.200	3(ft)
BD437	NPN	4.00	45	45	36	40.000	2.00	.70	2.00	.200	3(ft)
BD438	PNP	4.00	45	45	36	40.000	2.00	.70	2.00	.200	3(ft)
BD439	NPN	4.00	60	60	36	25.000	2.00	.80	2.00	.200	3(ft)
BD440	PNP	4.00	60	60	36	25.000	2.00	.80	2.00	.200	3(ft)
BD441	NPN	4.00	80	80	36	15.000	2.00	.80	2.00	.200	3(ft)
BD442	PNP	4.00	80	80	36	15.000	2.00	.80	2.00	.200	3(ft)
BD533	NPN	4.00	45	45	50	25.000	2.00	.80	2.00	.200	3(ft)
BD534	PNP	4.00	45	45	50	25.000	2.00	.80	2.00	.200	3(ft)
BD535	NPN	4.00	60	60	50	25.000	2.00	.80	2.00	.200	3(ft)
BD536	PNP	4.00	60	60	50	25.000	2.00	.80	2.00	.200	3(ft)
BD537	NPN	4.00	80	80	50	15.000	2.00	.80	2.00	.200	3(ft)

Motorola Power Transistors Short Form Device Characteristics

DEVICE	Polarity	IC max cont	Vceo sus V	Vcev or Vcbo	Pd W	Hfe min	@ IC amps	Vce sat max	@ IC amps	&	@ Ib amps	tf ft	microS or Mhz
BD538	PNP	4.00	80	80	50	15.000	2.00	.80	2.00		.200		3(ft)
BD675	NPN	4.00	45	45	40	750.00	1.50	.00	.00		.000		
BD675A	NPN	4.00	45	45	40	750.00	2.00	2.50	1.50		.030		1(ft)
BD676	PNP	4.00	45	45	40	750.00	1.50	.00	.00		.000		
BD676A	PNP	4.00	45	45	40	750.00	2.00	2.50	1.50		.030		1(ft)
BD677	NPN	4.00	60	60	40	750.00	1.50	2.50	1.50		.030		
BD677A	NPN	4.00	60	60	40	750.00	2.00	2.80	2.00		.040		1(ft)
BD678	PNP	4.00	60	60	40	750.00	1.50	2.50	1.50		.030		
BD678A	PNP	4.00	60	60	40	750.00	2.00	2.80	2.00		.040		1(ft)
BD679	NPN	4.00	80	80	40	750.00	1.50	2.50	1.50		.030		
BD679A	NPN	4.00	80	80	40	750.00	2.00	2.80	2.00		.040		1(ft)
BD680	PNP	4.00	80	80	40	750.00	1.50	2.50	1.50		.030		
BD680A	PNP	4.00	80	80	40	750.00	2.00	2.80	2.00		.040		1(ft)
BD681	NPN	4.00	100	100	40	750.00	1.50	2.50	1.50		.030		1(ft)
BD682	PNP	4.00	100	100	40	750.00	1.50	2.50	1.50		.030		1(ft)
BD745	NPN	20.0	45	50	115	20.000	5.00	1.00	5.00		.500		5(ft)
BD745A	NPN	20.0	60	70	115	20.000	5.00	1.00	5.00		.500		5(ft)
BD745B	NPN	20.0	80	90	115	20.000	5.00	1.00	5.00		.500		5(ft)
BD745C	NPN	20.0	100	110	115	20.000	5.00	1.00	5.00		.500		5(ft)
BD746	PNP	20.0	45	50	115	20.000	5.00	1.00	5.00		.500		5(ft)
BD746A	PNP	20.0	60	70	115	20.000	5.00	1.00	5.00		.500		5(ft)
BD746B	PNP	20.0	80	90	115	20.000	5.00	1.00	5.00		.500		5(ft)
BD746C	PNP	20.0	100	110	115	20.000	5.00	1.00	5.00		.500		5(ft)
BD775	NPN	4.00	45	45	15	750.00	2.00	1.50	1.50		.006		20(ft)
BD776	PNP	4.00	45	45	15	750.00	2.00	1.50	1.50		.006		20(ft)
BD777	NPN	4.00	60	60	15	750.00	2.00	1.50	1.50		.006		0.00(tf)
BD778	PNP	4.00	60	60	15	750.00	2.00	1.50	1.50		.006		20(ft)
BD779	NPN	4.00	80	80	15	750.00	2.00	1.50	1.50		.006		20(ft)
BD780	PNP	4.00	80	80	15	750.00	2.00	1.50	1.50		.006		20(ft)
BD785	NPN	4.00	45	60	15	25.000	1.00	.40	.50		.050		50(ft)
BD786	PNP	4.00	45	60	15	25.000	1.00	.40	.50		.050		50(ft)
BD787	NPN	4.00	60	80	15	25.000	1.00	.40	.50		.050		50(ft)
BD788	PNP	4.00	60	80	15	25.000	1.00	.40	.50		.050		50(ft)
BD789	NPN	4.00	80	80	15	20.000	1.00	.50	.50		.050		40(ft)
BD790	PNP	4.00	80	80	15	20.000	1.00	.50	.50		.050		40(ft)
BD791	NPN	4.00	100	100	15	20.000	1.00	.50	.50		.050		40(ft)
BD792	PNP	4.00	100	100	15	20.000	1.00	.50	.50		.050		40(ft)
BD795	NPN	8.00	45	45	65	25.000	3.00	1.00	3.00		.300		3(ft)
BD796	PNP	8.00	45	45	65	25.000	3.00	1.00	3.00		.300		3(ft)
BD797	NPN	8.00	60	60	65	25.000	3.00	1.00	3.00		.300		3(ft)
BD798	PNP	8.00	60	60	65	25.000	3.00	1.00	3.00		.300		3(ft)
BD799	NPN	8.00	80	80	65	15.000	3.00	1.00	3.00		.300		3(ft)
BD800	PNP	8.00	80	80	65	15.000	3.00	1.00	3.00		.300		3(ft)
BD801	NPN	8.00	100	100	65	15.000	3.00	1.00	3.00		.300		1(ft)
BD802	PNP	8.00	100	100	65	15.000	3.00	1.00	3.00		.300		1(ft)
BD805	NPN	10.0	45	55	90	15.000	4.00	1.10	4.00		.400		1(ft)
BD806	PNP	10.0	45	55	90	15.000	4.00	1.10	4.00		.400		1(ft)
BD807	NPN	10.0	60	70	90	15.000	4.00	1.10	4.00		.400		1(ft)
BD808	PNP	10.0	60	70	90	15.000	4.00	1.10	4.00		.400		1(ft)
BD809	NPN	10.0	80	80	90	15.000	4.00	1.10	4.00		.400		1(ft)

Motorola Power Transistors Short Form Device Characteristics

DEVICE	Polarity	IC max cont	Vceo sus V	Vcev or Vcbo	Pd W	Hfe min	@ IC amps	Vce sat max	@ IC amps	&	@ Ib amps	tf micro ft	or Mhz
BD810	PNP	10.0	80	80	90	15.000	4.00	1.10	4.00		.400		1(ft.
BD895	NPN	8.00	45	45	70	750.00	3.00	2.30	3.00		.012		
BD895A	NPN	8.00	45	45	70	750.00	4.00	2.50	4.00		.016		1(ft.
BD896	PNP	8.00	45	45	70	750.00	3.00	2.50	3.00		.012		
BD896A	PNP	8.00	45	45	70	750.00	4.00	2.80	4.00		.016		1(ft)
BD897	NPN	8.00	60	60	70	750.00	3.00	2.50	3.00		.012		
BD897A	NPN	8.00	60	60	70	750.00	4.00	2.80	4.00		.016		1(ft)
BD898	PNP	8.00	60	60	70	750.00	3.00	2.50	3.00		.012		
BD898A	PNP	8.00	60	60	70	750.00	4.00	2.80	4.00		.016		1(ft)
BD899	NPN	8.00	80	80	70	750.00	3.00	2.50	3.00		.012		
BD899A	NPN	8.00	80	80	70	750.00	4.00	2.80	4.00		.016		1(ft)
BD900	PNP	8.00	80	80	70	750.00	3.00	2.50	3.00		.012		
BD900A	PNP	8.00	80	80	70	750.00	4.00	2.80	4.00		.016		1(ft)
BD901	NPN	8.00	100	100	70	750.00	3.00	2.50	3.00		.012		
BD902	PNP	8.00	100	100	70	750.00	3.00	2.50	3.00		.012		
BF466	NPN	1.00	150	150	10	40.000	.10	1.50	.20		.020		100(ft)
BF467	NPN	1.00	200	200	10	40.000	.10	1.50	.20		.020		100(ft)
BF468	NPN	1.00	250	250	10	40.000	.10	1.50	.20		.020		100(ft)
BF757	NPN	.500	250	250	10	40.000	.03	.60	.03		.003		45(ft)
BF758	NPN	.500	300	300	10	40.000	.03	.60	.03		.003		45(ft)
BF759	NPN	.500	350	350	10	40.000	.03	.60	.03		.003		45(ft)
BF760	PNP	.500	250	250	10	40.000	.03	.75	.03		.003		45(ft)
BF761	PNP	.500	300	300	10	40.000	.03	.75	.03		.003		45(ft)
BF762	PNP	.500	350	350	10	40.000	.03	.75	.03		.003		45(ft)
BF787	NPN	.100	250	250	10	50.000	.02	1.00	.01		.001		60(ft)
BF788	NPN	.100	300	300	10	50.000	.02	1.00	.01		.001		60(ft)
BF789	NPN	.100	350	350	10	50.000	.02	1.00	.01		.001		60(ft)
BF790	PNP	.100	250	250	10	50.000	.02	1.00	.01		.001		60(ft)
BF791	PNP	.100	300	300	10	50.000	.02	1.00	.01		.001		60(ft)
BF792	PNP	.100	350	350	10	50.000	.02	1.00	.01		.001		60(ft)
BUS36	NPN	20.0	120	0	90	30.000	10.00	1.00	12.00		1.200		.20(tf)
BUS37	NPN	20.0	150	0	90	30.000	10.00	1.00	12.00		1.200		.20(tf)
BUS45P	NPN	3.00	450	850	75	6.0000	2.00	1.00	2.00		.500		.30(tf)
BUS46P	NPN	5.00	450	850	80	7.0000	3.00	1.00	3.00		.600		.30(tf)
BUS47	NPN	9.00	450	850	150	7.0000	6.00	1.50	6.00		1.200		.35(tf)
BUS47A	NPN	9.00	450	1000	150	7.0000	6.00	1.50	6.00		1.200		.35(tf)
BUS47AP	NPN	9.00	450	1000	107	7.0000	6.00	1.50	6.00		1.200		.35(tf)
BUS47P	NPN	9.00	450	850	107	7.0000	6.00	1.50	6.00		1.200		.35(tf)
BUS48	NPN	15.0	450	850	175	8.000	10.00	1.50	10.00		2.000		.30(tf)
BUS48A	NPN	15.0	450	1000	175	8.000	10.00	1.50	10.00		2.000		.30(tf)
BUS48AP	NPN	15.0	450	1000	125	8.000	10.00	1.50	10.00		2.000		.30(tf)
BUS48P	NPN	15.0	450	850	125	8.000	10.00	1.50	10.00		2.000		.30(tf)
BUS98	NPN	30.0	450	850	250	8.000	20.00	1.50	20.00		4.000		.30(tf)
BUS98A	NPN	30.0	450	1000	250	8.000	20.00	1.50	20.00		4.000		.30(tf)
BUT13	NPN	28.0	400	600	175	30.000	10.00	2.50	10.00		.500		.80(tf)
BUT14	NPN	25.0	500	850	175	30.000	8.00	2.00	8.00		.400		.80(tf)
BUT15	NPN	20.0	700	1000	175	30.000	6.00	2.00	6.00		.300		.80(tf)
BUT16	NPN	12.0	1000	1400	150	5.0000	8.00	5.00	12.00		6.000		1.50(tf)
BUT33	NPN	56.0	400	600	250	30.000	20.00	2.00	20.00		1.000		1.60(tf)
BUT34	NPN	50.0	500	850	250	30.000	16.00	2.00	16.00		.800		1.50(tf)

Motorola Power Transistors Short Form Device Characteristics

DEVICE	Polarity	IC max cont	Vceo sus V	Vcev or Vcbo	Pd W	Hfe min	@ IC amps	Vce sat max	@ IC amps	& @ Ib amps	tf microS or ft Mhz
BUT35	NPN	40.0	700	1000	250	30.000	12.00	2.00	12.00	.600	1.20(tf)
BUT36	NPN	24.0	1000	1400	200	5.0000	16.00	5.00	24.00	12.000	2.50(tf)
BUT50P	NPN	8.00	500	850	100	30.000	2.00	2.00	5.00	.250	.25(tf)
BUT51P	NPN	15.0	500	850	125	40.000	5.00	2.00	10.00	.500	.30(tf)
BUV10	NPN	30.0	125	160	150	20.000	10.00	.60	10.00	1.000	.25(tf)
BUV10N	NPN	25.0	125	160	175	20.000	10.00	1.00	10.00	1.000	.45(tf)
BUV11	NPN	25.0	200	250	150	20.000	6.00	.60	6.00	.600	.40(tf)
BUV11N	NPN	20.0	160	220	150	20.000	8.00	.60	8.00	.800	.25(tf)
BUV12	NPN	20.0	250	300	150	20.000	5.00	1.00	5.00	.500	.50(tf)
BUV20	NPN	50.0	125	160	250	20.000	25.00	.60	25.00	2.500	.25(tf)
BUV21	NPN	50.0	200	250	250	20.000	12.00	.60	12.00	1.200	.40(tf)
BUV21N	NPN	40.0	160	220	250	15.000	20.00	1.00	20.00	2.000	.20(tf)
BUV22	NPN	40.0	250	300	250	20.000	10.00	1.00	10.00	1.000	.35(tf)
BUV23	NPN	30.0	325	400	250	15.000	8.00	.80	8.00	1.600	.40(tf)
BUV24	NPN	20.0	400	450	250	15.000	6.00	.60	6.00	1.200	.90(tf)
BUV25	NPN	15.0	500	500	250	15.000	4.00	.60	4.00	.800	1.00(tf)
BUV26	NPN	20.0	90	180	85	.00000	.00	1.50	12.00	1.200	.15(tf)
BUV27	NPN	15.0	120	240	85	.00000	.00	1.50	8.00	.800	.15(tf)
BUX10CECC	NPN	25.0	125	160	150	20.000	10.00	1.20	20.00	2.000	.30(tf)
BUX11CECC	NPN	20.0	200	250	150	20.000	6.00	1.50	12.00	1.200	.40(tf)
BUX12CECC	NPN	20.0	250	300	150	20.000	5.00	1.50	10.00	1.250	.50(tf)
BUX13	NPN	15.0	325	400	150	15.000	4.00	.80	4.00	.800	.80(tf)
BUX13CECC	NPN	15.0	325	400	150	15.000	4.00	1.50	8.00	1.600	1.00(tf)
BUX14	NPN	10.0	400	450	150	15.000	3.00	.60	3.00	.600	.90(tf)
BUX14CECC	NPN	10.0	400	450	150	15.000	3.00	1.50	6.00	1.200	1.20(tf)
BUX15	NPN	8.00	500	500	150	15.000	2.00	.60	2.00	.400	1.00(tf)
BUX15CECC	NPN	8.00	500	500	150	15.000	2.00	1.50	4.00	.800	1.40(tf)
BUX39	NPN	30.0	90	120	120	15.000	12.00	1.20	12.00	1.200	.25(tf)
BUX40	NPN	20.0	125	160	120	15.000	10.00	1.20	10.00	1.000	.25(tf)
BUX41	NPN	20.0	200	250	120	15.000	5.00	1.20	5.00	.500	.40(tf)
BUX41N	NPN	18.0	160	220	120	15.000	8.00	1.20	8.00	.800	.25(tf)
BUX42	NPN	12.0	250	300	120	15.000	4.00	1.20	4.00	.400	.40(tf)
BUX43	NPN	10.0	325	400	120	15.000	3.00	1.00	3.00	.375	.90(tf)
BUX44	NPN	8.00	400	450	120	15.000	2.00	1.00	2.00	.250	.90(tf)
BUX45	NPN	5.00	500	500	120	15.000	1.00	1.00	1.00	.125	.90(tf)
BUX46	NPN	3.50	400	850	85	5.0000	2.50	1.50	2.50	.500	.60(tf)
BUX47	NPN	8.50	400	850	107	5.0000	6.00	1.50	6.00	1.200	.60(tf)
BUX48	NPN	15.0	400	850	125	.00000	.00	1.50	10.00	2.000	.60(tf)
BUX48A	NPN	12.0	450	1000	125	5.0000	8.00	1.50	8.00	1.600	.60(tf)
BUX80	NPN	10.0	400	800	114	5.0000	5.00	1.50	5.00	1.000	.80(tf)
BUX81	NPN	10.0	450	1000	114	5.0000	5.00	1.50	5.00	1.000	.80(tf)
BUX82	NPN	5.00	400	800	84	5.0000	2.50	1.50	2.50	.500	.80(tf)
BUX83	NPN	5.00	450	1000	84	5.0000	2.50	1.50	2.50	.500	.80(tf)
BUX84	NPN	2.00	400	800	50	10.000	.30	1.00	1.00	.200	1.40(tf)
BUX85	NPN	2.00	450	1000	50	10.000	.30	1.00	1.00	.200	1.40(tf)
BUY49P	NPN	3.00	200	250	20	30.000	.50	.20	.50	.050	
BUY69A	NPN	10.0	400	1000	100	15.000	2.50	2.20	8.00	2.500	1.00(tf)
BUY69B	NPN	10.0	325	800	100	15.000	2.50	2.20	8.00	2.500	1.00(tf)
BU205	NPN	2.50	700	1500	56	2.0000	2.00	5.00	2.00	1.000	1.00(tf)
BU208	NPN	5.00	700	1500	20	2.2500	4.50	5.00	4.50	2.000	.40(tf)

Motorola Power Transistors Short Form Device Characteristics

DEVICE	Polarity	IC max cont	Vceo sus V	Vcev or Vcbo	Pd W	Hfe min	@ IC amps	Vce sat max	@ IC amps	&	@ Ib amps	tf microsec or ft Mhz
BU208A	NPN	15.0	700	1500	20	2.2500	4.50	1.00	4.50		2.000	.40(tf)
BU208D	NPN	5.00	700	1500	60	2.2500	4.25	1.00	4.50		2.000	.60(tf)
BU209	NPN	5.00	800	1700	20	2.2500	3.00	5.00	3.00		1.300	.40(tf)
BU323	NPN	10.0	350	500	175	150.00	6.00	1.70	6.00		.120	5.00(tf)
BU323A	NPN	10.0	400	600	175	150.00	6.00	1.70	6.00		.120	5.00(tf)
BU326	NPN	6.00	375	800	90	30.000	.60	3.00	4.00		1.250	1.00(tf)
BU326A	NPN	6.00	400	900	90	30.000	.60	3.00	4.00		1.250	1.00(tf)
BU406	NPN	7.00	200	400	60	10.000	5.00	1.00	5.00		.500	.75(tf)
BU407	NPN	7.00	150	330	60	10.000	5.00	1.00	5.00		.500	.75(tf)
BU508	NPN	8.00	700	1500	75	2.2500	4.50	3.00	4.50		2.000	.50(tf)
BU508A	NPN	8.00	700	1500	75	2.2500	4.50	1.00	4.50		2.000	.50(tf)
BU522	NPN	7.00	0	400	75	250.00	2.50	2.50	4.00		.080	7(ft)
BU522A	NPN	7.00	400	450	75	250.00	2.50	2.00	4.00		.080	7(ft)
BU522B	NPN	7.00	425	475	75	250.00	2.50	2.00	4.00		.080	7(ft)
BU800	NPN	5.00	700	1500	60	2.2500	4.50	5.00	4.50		2.000	.60(tf)
MJE13002	NPN	1.50	300	600	40	5.0000	1.00	1.00	1.00		.250	.70(tf)
MJE13003	NPN	1.50	400	700	40	5.0000	1.00	1.00	1.00		.250	.70(tf)
MJE13003A	NPN	1.50	400	850	40	5.0000	1.00	1.00	1.00		.250	.70(tf)
MJE13004	NPN	4.00	300	600	75	8.0000	2.00	.60	2.00		.500	.90(tf)
MJE13005	NPN	4.00	400	700	75	8.0000	2.00	.60	2.00		.500	.90(tf)
MJE13005A	NPN	4.00	400	850	75	8.0000	2.00	.60	2.00		.500	.90(tf)
MJE13006	NPN	8.00	300	600	80	8.0000	2.00	1.00	2.00		.400	.70(tf)
MJE13007	NPN	8.00	400	700	80	8.0000	2.00	1.00	2.00		.400	.70(tf)
MJE13007A	NPN	8.00	400	850	80	8.0000	2.00	1.00	2.00		.400	.70(tf)
MJE13008	NPN	12.0	300	600	100	8.0000	5.00	1.00	5.00		1.000	.70(tf)
MJE13009	NPN	12.0	400	700	100	8.0000	5.00	1.00	5.00		1.000	.70(tf)
MJE13009A	NPN	12.0	400	850	100	8.0000	5.00	1.00	5.00		1.000	.70(tf)
MJE15028	NPN	8.00	120	120	50	40.000	2.00	.50	1.00		.100	30(ft)
MJE15029	PNP	8.00	120	120	50	40.000	2.00	.50	1.00		.100	30(ft)
MJE15030	NPN	8.00	150	150	50	40.000	2.00	.50	1.00		.100	30(ft)
MJE15031	PNP	8.00	150	150	50	40.000	2.00	.50	1.00		.100	30(ft)
MJE16002	NPN	5.00	450	850	75	5.0000	5.00	2.50	3.00		.400	.20(tf)
MJE16004	NPN	5.00	450	850	75	7.0000	5.00	2.50	3.00		.300	.15(tf)
MJE200	NPN	5.00	25	40	15	45.000	2.00	.75	2.00		.200	65(ft)
MJE210	PNP	5.00	25	40	15	45.000	2.00	.75	2.00		.200	65(ft)
MJE240	NPN	4.00	80	80	15	40.000	.20	.30	1.00		.100	40(ft)
MJE241	NPN	4.00	80	80	15	40.000	.20	.30	1.00		.100	40(ft)
MJE243	NPN	4.00	100	100	15	40.000	.20	.30	1.00		.100	40(ft)
MJE250	PNP	4.00	80	80	15	40.000	.20	.30	.50		.050	40(ft)
MJE251	PNP	4.00	80	80	15	40.000	.20	.30	.50		.050	40(ft)
MJE253	PNP	4.00	100	100	15	40.000	.20	.30	.50		.050	40(ft)
MJE2955	PNP	10.0	60	70	90	20.000	4.00	1.10	4.00		.400	2(ft)
MJE2955T	PNP	10.0	60	70	75	20.000	4.00	1.10	4.00		.400	2(ft)
MJE3055	NPN	10.0	60	70	90	20.000	4.00	1.10	4.00		.400	2(ft)
MJE3055T	NPN	10.0	60	70	75	20.000	4.00	1.10	4.00		.400	2(ft)
MJE340	NPN	.500	300	300	20	30.000	.05	.00	.00		.000	
MJE350	PNP	.500	300	300	20	30.000	.05	.00	.00		.000	
MJE370	PNP	3.00	30	30	25	25.000	1.00	.00	.00		.000	
MJE371	PNP	4.00	40	40	40	40.000	1.00	.00	.00		.000	
MJE4340	NPN	10.0	100	200	125	20.000	10.00	.50	5.00		.500	1(ft)

Motorola Power Transistors Short Form Device Characteristics

DEVICE	Polarity	IC max cont	Vceo sus V	Vcev or Vcbo	Pd W	Hfe min	@ IC amps	Vce sat max	@ IC amps	@ Ib amps	tf microS or ft Mhz
MJE4341	NPN	10.0	120	220	125	20.000	10.00	.50	5.00	.500	1(ft)
MJE4342	NPN	10.0	140	240	125	20.000	10.00	.50	5.00	.500	1(ft)
MJE4343	NPN	10.0	160	260	125	20.000	10.00	.50	5.00	.500	1(ft)
MJE4350	PNP	10.0	100	200	125	20.000	10.00	.50	5.00	.500	1(ft)
MJE4351	PNP	10.0	120	220	125	20.000	10.00	.50	5.00	.500	1(ft)
MJE4352	PNP	10.0	140	240	125	20.000	10.00	.50	5.00	.500	1(ft)
MJE4353	PNP	10.0	160	260	125	20.000	10.00	.50	5.00	.500	1(ft)
MJE51T	NPN	5.00	250	350	80	5.0000	5.00	2.00	5.00	2.000	2(ft)
MJE52T	NPN	5.00	300	400	80	5.0000	5.00	2.00	5.00	2.000	2(ft)
MJE520	NPN	3.00	30	30	25	25.000	1.00	.00	.00	.000	
MJE53T	NPN	5.00	350	450	80	5.0000	5.00	2.00	5.00	2.000	2(ft)
MJE5850	PNP	8.00	300	350	80	5.0000	5.00	2.00	4.00	1.000	.50(tf)
MJE5851	PNP	8.00	350	400	80	5.0000	5.00	2.00	4.00	1.000	.50(tf)
MJE5852	PNP	8.00	400	450	80	5.0000	5.00	2.00	4.00	1.000	.50(tf)
MJE700T	PNP	4.00	60	60	50	750.00	1.50	2.50	1.50	.030	
MJE701T	PNP	4.00	60	60	50	750.00	2.00	2.80	2.00	.040	
MJE702T	PNP	4.00	80	80	50	750.00	1.50	2.50	1.50	.030	
MJE703T	PNP	4.00	80	80	50	750.00	2.00	2.80	2.00	.040	
MJE800T	NPN	4.00	60	60	50	750.00	1.50	2.50	1.50	.030	1(ft)
MJE801T	NPN	4.00	60	60	50	750.00	2.00	2.80	2.00	.040	1(ft)
MJE802T	NPN	4.00	80	80	50	750.00	1.50	2.50	1.50	.030	1(ft)
MJE803T	NPN	4.00	80	80	50	750.00	2.00	2.80	2.00	.040	1(ft)
MJE8500	NPN	2.50	700	1200	65	7.5000	.50	2.00	1.00	.330	2.00(tf)
MJE8501	NPN	2.50	800	1400	65	7.5000	.50	2.00	1.00	.330	2.00(tf)
MJE8502	NPN	5.00	700	1200	80	7.5000	1.00	2.00	2.50	1.000	2.00(tf)
MJE8503	NPN	5.00	800	1400	80	7.5000	1.00	2.00	2.50	1.000	2.00(tf)
MJ1000	NPN	8.00	60	60	90	1000.0	3.00	2.00	3.00	.012	
MJ10000	NPN	20.0	350	450	175	40.000	10.00	1.90	10.00	.400	2.40(tf)
MJ10001	NPN	20.0	400	500	175	40.000	10.00	1.90	10.00	.400	2.40(tf)
MJ10002	NPN	10.0	350	450	150	30.000	5.00	1.90	5.00	.250	1.50(tf)
MJ10003	NPN	10.0	400	500	150	30.000	5.00	1.90	5.00	.250	1.50(tf)
MJ10004	NPN	20.0	350	450	175	40.000	10.00	1.90	10.00	.400	.50(tf)
MJ10005	NPN	20.0	400	500	175	40.000	10.00	1.90	10.00	.400	.50(tf)
MJ10006	NPN	10.0	350	450	150	30.000	5.00	1.90	5.00	.250	.50(tf)
MJ10007	NPN	10.0	400	500	150	30.000	5.00	1.90	5.00	.250	.50(tf)
MJ10008	NPN	20.0	450	650	175	30.000	10.00	2.00	10.00	.500	.60(tf)
MJ10009	NPN	20.0	500	700	175	30.000	10.00	2.00	10.00	.500	.60(tf)
MJ1001	NPN	8.00	80	80	90	1000.0	3.00	2.00	3.00	.012	
MJ10013	NPN	10.0	550	650	175	10.000	10.00	2.50	10.00	2.000	1.00(tf)
MJ10014	NPN	10.0	600	700	175	10.000	10.00	2.50	10.00	2.000	1.00(tf)
MJ10020	NPN	60.0	200	300	250	75.000	15.00	2.20	30.00	1.200	.50(tf)
MJ10021	NPN	60.0	250	350	250	75.000	15.00	2.20	30.00	1.200	.50(tf)
MJ10022	NPN	40.0	350	450	250	50.000	10.00	2.20	20.00	1.000	.90(tf)
MJ10023	NPN	40.0	400	600	250	50.000	10.00	2.20	20.00	1.000	.90(tf)
MJ10024	NPN	20.0	750	1000	250	50.000	5.00	2.20	10.00	1.000	1.80(tf)
MJ10025	NPN	20.0	850	1200	250	50.000	5.00	2.20	10.00	1.000	1.80(tf)
MJ10050	NPN	75.0	850	900	500	35.000	50.00	2.00	50.00	4.000	5.00(tf)
MJ10100	NPN	150.	450	500	500	50.000	00.00	2.00	00.00	3.300	0.00(tf)
MJ10200	NPN	300.	250	300	500	75.000	00.00	2.00	00.00	5.500	8.00(tf)
MJ11011	PNP	30.0	60	60	200	1000.0	20.00	3.00	20.00	.200	4(ft)

Motorola Power Transistors Short Form Device Characteristics

DEVICE	Polarity	IC max cont	Vceo sus V	Vcev or Vcbo	Pd W	Hfe min	@ IC amps	Vce sat max	@ IC amps	&	@ Ib amps	tf microSft or Mhz
MJ11012	NPN	30.0	60	60	200	1000.	020.00	3.00	20.00		.200	4(ft)
MJ11013	PNP	30.0	90	90	200	1000.	020.00	3.00	20.00		.200	4(ft)
MJ11014	NPN	30.0	90	90	200	1000.	020.00	3.00	20.00		.200	4(ft)
MJ11015	PNP	30.0	120	120	200	1000.	020.00	3.00	20.00		.200	4(ft)
MJ11016	NPN	30.0	120	120	200	1000.	020.00	3.00	20.00		.200	4(ft)
MJ11028	NPN	50.0	60	60	300	1000.	025.00	2.50	25.00		.250	
MJ11029	PNP	50.0	60	60	300	1000.	025.00	2.50	25.00		.250	
MJ11030	NPN	50.0	90	90	300	1000.	025.00	2.50	25.00		.250	
MJ11031	PNP	50.0	90	90	300	1000.	025.00	2.50	25.00		.250	
MJ11032	NPN	50.0	120	120	300	1000.	025.00	2.50	25.00		.250	
MJ11033	PNP	50.0	120	120	300	1000.	025.00	2.50	25.00		.250	
MJ13330	NPN	20.0	200	400	175	8.000	010.00	1.50	10.00		1.500	.70(tf)
MJ13331	NPN	20.0	250	450	175	8.000	010.00	1.50	10.00		1.500	.70(tf)
MJ13332	NPN	20.0	350	650	175	10.000	5.00	1.80	10.00		2.000	.70(tf)
MJ13333	NPN	20.0	400	700	175	10.000	5.00	1.80	10.00		2.000	.70(tf)
MJ13334	NPN	20.0	450	750	175	10.000	5.00	1.80	10.00		2.000	.70(tf)
MJ13335	NPN	20.0	500	800	175	10.000	5.00	1.80	10.00		2.000	.70(tf)
MJ14000	NPN	70.0	60	60	300	15.000	50.00	1.00	25.00		2.500	300(ft)
MJ14001	PNP	70.0	60	60	300	15.000	50.00	1.00	25.00		2.500	
MJ14002	NPN	70.0	80	80	300	15.000	50.00	1.00	25.00		2.500	
MJ14003	PNP	70.0	80	80	300	15.000	50.00	1.00	25.00		2.500	
MJ15001	NPN	15.0	140	140	200	25.000	4.00	1.00	4.00		.400	2(ft)
MJ15002	PNP	15.0	140	140	200	25.000	4.00	1.00	4.00		.400	2(ft)
MJ15003	NPN	20.0	140	140	250	25.000	5.00	1.00	5.00		.500	2(ft)
MJ15004	PNP	20.0	140	140	250	25.000	5.00	1.00	5.00		.500	2(ft)
MJ15011	NPN	10.0	250	250	200	20.000	2.00	.80	2.00		.200	
MJ15012	PNP	10.0	250	250	200	20.000	2.00	.80	2.00		.200	
MJ15015	NPN	15.0	120	200	180	20.000	4.00	1.10	4.00		.400	6.00(tf)
MJ15016	PNP	15.0	120	200	180	20.000	4.00	1.10	4.00		.400	6.00(tf)
MJ15022	NPN	16.0	200	350	250	15.000	8.00	1.40	8.00		.800	4(ft)
MJ15023	PNP	16.0	200	350	250	15.000	8.00	1.40	8.00		.800	4(ft)
MJ15024	NPN	16.0	250	400	250	15.000	8.00	1.40	8.00		.800	4(ft)
MJ15025	PNP	16.0	250	400	250	15.000	8.00	1.40	8.00		.800	4(ft)
MJ15026	NPN	16.0	200	200	250	25.000	5.00	3.00	16.00		4.000	15(ft)
MJ15027	PNP	16.0	200	200	250	25.000	5.00	3.00	16.00		4.000	15(ft)
MJ16002	NPN	5.00	450	850	125	5.0000	5.00	2.50	3.00		.400	.20(tf)
MJ16004	NPN	5.00	450	850	125	7.0000	5.00	2.50	3.00		.300	.15(tf)
MJ16006	NPN	8.00	450	850	150	5.0000	8.00	3.00	5.00		.660	.20(tf)
MJ16008	NPN	8.00	450	850	150	7.0000	8.00	3.00	5.00		.500	.15(tf)
MJ16010	NPN	15.0	450	850	175	5.0000	15.00	3.00	10.00		1.300	.20(tf)
MJ16012	NPN	15.0	450	850	175	7.0000	15.00	3.00	10.00		1.000	.15(tf)
MJ16014	NPN	20.0	450	850	250	5.0000	20.00	3.00	15.00		2.000	.20(tf)
MJ16016	NPN	20.0	450	850	250	7.0000	20.00	3.00	15.00		1.500	.15(tf)
MJ2500	PNP	10.0	60	60	150	1000.0	5.00	2.00	5.00		.020	
MJ2501	PNP	10.0	80	80	150	1000.0	5.00	2.00	5.00		.020	
MJ2955	PNP	15.0	60	100	115	20.000	4.00	1.10	4.00		.400	2(ft)
MJ2955A	PNP	15.0	60	100	115	20.000	4.00	1.10	4.00		.400	.60(tf)
MJ3000	NPN	10.0	60	60	150	1000.0	5.00	2.00	5.00		.020	
MJ3001	NPN	10.0	80	80	150	1000.0	5.00	2.00	5.00		.020	
MJ4030	PNP	16.0	60	60	150	1000.0	10.00	2.50	10.00		.040	

Motorola Power Transistors Short Form Device Characteristics

DEVICE	Polarity	IC max cont	Vceo sus V	Vcev or Vcbo	Pd W	Hfe min	@ IC amps	Vce sat max	@ IC amps	@ Ib amps	tf microS or ft Mhz
MJ4031	PNP	16.0	80	80	150	1000.0	10.00	2.50	10.00	.040	
MJ4032	PNP	16.0	100	100	150	1000.0	10.00	2.50	10.00	.040	
MJ4033	NPN	16.0	60	60	150	1000.0	10.00	2.50	10.00	.040	
MJ4034	NPN	16.0	80	80	150	1000.0	10.00	2.50	10.00	.040	
MJ4035	NPN	16.0	100	100	150	1000.0	10.00	2.50	10.00	.040	
MJ4400	NPN	5.00	300	650	100	12.000	1.50	1.00	3.00	.600	.80(tf)
MJ4401	NPN	5.00	400	850	100	12.000	1.50	1.00	3.00	.600	.80(tf)
MJ4502	PNP	30.0	90	100	200	25.000	7.50	.80	7.50	.750	2(ft)
MJ6502	PNP	8.00	250	300	125	15.000	2.00	1.50	4.00	1.000	.50(tf)
MJ6503	PNP	8.00	400	450	125	15.000	2.00	1.50	4.00	1.000	.50(tf)
MJ802	NPN	30.0	90	100	200	25.000	7.50	.80	7.50	.750	2(ft)
MJ8500	NPN	2.50	700	1200	125	7.5000	.50	2.00	1.00	.330	2.00(tf)
MJ8501	NPN	2.50	800	1400	125	7.5000	.50	2.00	1.00	.330	2.00(tf)
MJ8502	NPN	5.00	700	1200	150	7.5000	1.00	2.00	2.50	1.000	2.00(tf)
MJ8503	NPN	5.00	800	1400	150	7.5000	1.00	2.00	2.50	1.000	2.00(tf)
MJ8504	NPN	10.0	700	1200	175	7.5000	1.50	2.00	5.00	2.000	.20(tf)
MJ8505	NPN	10.0	800	1400	175	7.5000	1.50	2.00	5.00	2.000	.20(tf)
MJ900	PNP	8.00	60	60	90	1000.0	3.00	2.00	3.00	.012	
MJ901	PNP	8.00	80	80	90	1000.0	3.00	2.00	3.00	.012	
MPSU01	NPN	2.00	30	40	10	50.000	1.00	.50	1.00	.100	50(ft)
MPSU05	NPN	2.00	60	60	10	60.000	.25	.40	.25	.010	50(ft)
MPSU06	NPN	2.00	80	80	10	60.000	.25	.40	.25	.010	50(ft)
MPSU07	NPN	2.00	100	100	10	30.000	.25	.40	.25	.010	50(ft)
MPSU10	NPN	.500	300	300	10	40.000	.03	.75	.03	.003	45(ft)
MPSU45	NPN	2.00	40	50	10	4000.0	1.00	1.50	1.00	.002	100(ft)
MPSU51	PNP	2.00	30	40	10	50.000	1.00	.70	1.00	.100	50(ft)
MPSU55	PNP	2.00	60	60	10	50.000	.25	.50	.25	.010	50(ft)
MPSU56	PNP	2.00	80	80	10	50.000	.25	.50	.25	.010	50(ft)
MPSU57	PNP	2.00	100	100	10	30.000	.25	.50	.25	.010	50(ft)
MPSU60	PNP	.500	300	300	10	30.000	.01	.75	.02	.002	60(ft)
MPSU95	PNP	2.00	40	50	10	4000.0	1.00	1.50	1.00	.002	50(ft)
TIP2955	PNP	15.0	60	100	90	20.000	4.00	1.10	4.00	.400	3(ft)
TIP3055	NPN	15.0	60	100	90	20.000	4.00	1.10	4.00	.400	3(ft)
TIP47	NPN	1.00	250	350	40	30.000	.30	1.00	1.00	.200	10(ft)
TIP48	NPN	1.00	300	400	40	30.000	.30	1.00	1.00	.200	10(ft)
TIP49	NPN	1.00	350	450	40	30.000	.30	1.00	1.00	.200	10(ft)
TIP50	NPN	1.00	400	500	40	30.000	.30	1.00	1.00	.200	10(ft)
2N3054	NPN	4.00	55	90	25	25.000	.50	1.00	.50	.050	3(ft)
2N3055	NPN	15.0	60	100	115	20.000	4.00	1.10	4.00	.400	2(ft)
2N3055A	NPN	15.0	60	100	115	20.000	4.00	1.10	4.00	.400	6.00(tf)
2N3441	NPN	3.00	140	160	25	25.000	.50	6.00	2.70	.900	
2N3442	NPN	10.0	140	160	117	20.000	3.00	5.00	10.00	2.000	80(ft)
2N3583	NPN	1.00	175	250	35	40.000	.50	5.00	1.00	.125	10(ft)
2N3584	NPN	2.00	250	375	35	25.000	1.00	.70	1.00	.125	3.00(tf)
2N3585	NPN	2.00	300	500	35	25.000	1.00	.75	1.00	.125	10(ft)
2N3715	NPN	10.0	60	80	150	50.000	1.00	.80	5.00	.500	.40(tf)
2N3716	NPN	10.0	80	100	150	50.000	1.00	.80	5.00	.500	.40(tf)
2N3740	PNP	4.00	60	60	25	30.000	.25	.60	1.00	.125	3(ft)
2N3741	PNP	4.00	80	80	25	30.000	.25	.60	1.00	.125	3(ft)
2N3766	NPN	4.00	60	80	20	40.000	.50	1.00	.50	.050	10(ft)

Motorola Power Transistors Short Form Device Characteristics

DEVICE	Polarity	IC max cont	Vceo sus V	Vcev or Vcbo	Pd W	Hfe min	@ IC amps	Vce sat max	@ IC amps	& @ Ib amps	tf microS or ft Mhz
2N3767	NPN	4.00	80	100	20	40.000	.50	1.00	.50	.050	10(ft)
2N3771	NPN	30.0	40	50	150	15.000	15.00	2.00	15.00	1.500	0(ft)
2N3772	NPN	30.0	60	100	150	15.000	10.00	1.40	10.00	1.000	0(ft)
2N3773	NPN	16.0	140	160	150	15.000	8.00	1.40	8.00	.800	
2N3791	PNP	10.0	60	60	150	50.000	1.00	1.00	5.00	.500	4(ft)
2N3792	PNP	10.0	80	80	150	50.000	1.00	1.00	5.00	.500	4(ft)
2N4398	PNP	30.0	40	40	200	15.000	15.00	1.00	15.00	1.500	.60(tf)
2N4399	PNP	30.0	60	60	200	15.000	15.00	1.00	15.00	1.500	.60(tf)
2N4898	PNP	4.00	40	40	25	20.000	.50	.60	1.00	.100	3(ft)
2N4899	PNP	4.00	60	60	25	20.000	.50	.60	1.00	.100	3(ft)
2N4900	PNP	4.00	80	80	25	20.000	.50	.60	1.00	.100	3(ft)
2N4910	NPN	1.00	40	40	25	20.000	.50	.60	1.00	.100	3(ft)
2N4911	NPN	1.00	60	60	25	20.000	.50	.60	1.00	.100	3(ft)
2N4912	NPN	1.00	80	80	25	20.000	.50	.60	1.00	.100	3(ft)
2N4918	PNP	1.00	40	40	30	30.000	.50	.60	1.00	.100	3(ft)
2N4919	PNP	1.00	60	60	30	30.000	.50	.60	1.00	.100	3(ft)
2N4920	PNP	1.00	80	80	30	30.000	.50	.60	1.00	.100	3(ft)
2N4921	NPN	1.00	40	40	30	30.000	.50	.60	1.00	.100	3(ft)
2N4922	NPN	1.00	60	60	30	30.000	.50	.60	1.00	.100	3(ft)
2N4923	NPN	1.00	80	80	30	30.000	.50	.60	1.00	.100	3(ft)
2N5038	NPN	20.0	90	150	140	20.000	12.00	1.00	12.00	1.200	.50(tf)
2N5039	NPN	20.0	75	120	140	20.000	10.00	1.00	10.00	1.000	.50(tf)
2N5050	NPN	2.00	125	125	40	25.000	.75	1.00	.75	.100	1.20(tf)
2N5051	NPN	2.00	150	150	40	25.000	.75	1.00	.75	.100	1.20(tf)
2N5052	NPN	2.00	200	200	40	25.000	.75	1.00	.75	.100	1.20(tf)
2N5190	NPN	4.00	40	40	40	25.000	1.50	.60	1.50	.150	2(ft)
2N5191	NPN	4.00	60	60	40	25.000	1.50	.60	1.50	.150	2(ft)
2N5192	NPN	4.00	80	80	40	20.000	1.50	.60	1.50	.150	2(ft)
2N5193	PNP	4.00	40	40	40	25.000	1.50	.60	1.50	.150	2(ft)
2N5194	PNP	4.00	60	60	40	25.000	1.50	.60	1.50	.150	2(ft)
2N5195	PNP	4.00	80	80	40	20.000	1.50	.60	1.50	.150	2(ft)
2N5301	NPN	30.0	40	40	200	15.000	15.00	.75	10.00	1.000	1.00(tf)
2N5302	NPN	30.0	60	60	200	15.000	15.00	.75	10.00	1.000	1.00(tf)
2N5303	NPN	20.0	80	80	200	15.000	10.00	1.00	10.00	1.000	1.00(tf)
2N5344	PNP	1.00	250	300	40	25.000	.50	3.00	1.00	.200	.10(tf)
2N5345	PNP	1.00	250	300	40	25.000	.50	3.00	1.00	.200	.10(tf)
2N5427	NPN	7.00	80	80	40	30.000	2.00	.70	2.00	.200	.20(tf)
2N5428	NPN	7.00	80	80	40	60.000	2.00	.70	2.00	.200	.20(tf)
2N5429	NPN	7.00	100	100	40	30.000	2.00	.70	2.00	.200	.20(tf)
2N5430	NPN	7.00	100	100	40	60.000	2.00	.70	2.00	.200	.20(tf)
2N5629	NPN	16.0	100	100	200	25.000	8.00	1.00	10.00	1.000	1(ft)
2N5630	NPN	16.0	120	120	200	20.000	8.00	1.00	10.00	1.000	1(ft)
2N5631	NPN	16.0	140	140	200	15.000	8.00	1.00	10.00	1.000	1(ft)
2N5632	NPN	10.0	100	100	150	25.000	5.00	1.00	7.50	.750	1(ft)
2N5633	NPN	10.0	120	120	150	20.000	5.00	1.00	7.50	.750	1(ft)
2N5634	NPN	10.0	140	140	150	15.000	5.00	1.00	7.50	.750	1(ft)
2N5655	NPN	1.00	250	275	20	30.000	.10	1.00	.10	.010	10(ft)
2N5656	NPN	1.00	300	325	20	30.000	.10	1.00	.10	.010	10(ft)
2N5657	NPN	1.00	350	375	20	30.000	.10	1.00	.10	.010	10(ft)
2N5683	PNP	50.0	60	60	300	15.000	25.00	1.00	25.00	2.500	2(ft)

Motorola Power Transistors Short Form Device Characteristics

DEVICE	Polarity	IC max cont	Vceo sus V	Vcev or Vcbo	Pd W	Hfe min	@ IC amps	Vce sat max	@ IC amps	&	@ Ib amps	tf microSft or Mhz
2N5684	PNP	50.0	80	80	300	15.000	25.00	1.00	25.00		2.500	2(ft)
2N5685	NPN	50.0	60	60	300	15.000	25.00	1.00	25.00		2.500	2(ft)
2N5686	NPN	50.0	80	80	300	15.000	25.00	1.00	25.00		2.500	2(ft)
2N5745	PNP	20.0	80	80	200	15.000	10.00	1.00	10.00		1.000	1.00(tf)
2N5875	PNP	10.0	60	60	150	20.000	4.00	1.00	5.00		.500	.80(tf)
2N5876	PNP	10.0	80	80	150	20.000	4.00	1.00	5.00		.500	.80(tf)
2N5877	NPN	10.0	60	60	150	20.000	4.00	1.00	5.00		.500	.80(tf)
2N5878	NPN	10.0	80	80	150	20.000	4.00	1.00	5.00		.500	.80(tf)
2N5883	PNP	25.0	60	60	200	20.000	10.00	1.00	15.00		1.500	.80(tf)
2N5884	PNP	25.0	80	80	200	20.000	10.00	1.00	15.00		1.500	.80(tf)
2N5885	NPN	25.0	60	60	200	20.000	10.00	1.00	15.00		1.500	.80(tf)
2N5886	NPN	25.0	80	80	200	20.000	10.00	1.00	15.00		1.500	.80(tf)
2N6029	PNP	16.0	100	100	200	25.000	8.00	1.00	10.00		1.000	1(ft)
2N6030	PNP	16.0	120	120	200	20.000	8.00	1.00	10.00		1.000	1(ft)
2N6031	PNP	16.0	140	140	200	15.000	8.00	1.00	10.00		1.000	1(ft)
2N6049	PNP	4.00	55	90	75	25.000	.50	.50	.50		.050	3(ft)
2N6050	PNP	12.0	60	60	150	750.00	6.00	2.00	6.00		.024	4(ft)
2N6051	PNP	12.0	80	80	150	750.00	6.00	2.00	6.00		.024	4(ft)
2N6052	PNP	12.0	100	100	150	750.00	6.00	2.00	6.00		.024	4(ft)
2N6053	PNP	8.00	60	60	100	750.00	4.00	2.00	4.00		.016	4(ft)
2N6054	PNP	8.00	80	80	100	750.00	4.00	2.00	4.00		.016	4(ft)
2N6055	NPN	8.00	60	60	100	750.00	4.00	2.00	4.00		.016	4(ft)
2N6056	NPN	8.00	80	80	100	750.00	4.00	2.00	4.00		.016	4(ft)
2N6057	NPN	12.0	60	60	150	750.00	6.00	2.00	6.00		.024	4(ft)
2N6058	NPN	12.0	80	80	150	750.00	6.00	2.00	6.00		.024	4(ft)
2N6059	NPN	12.0	100	100	150	750.00	6.00	2.00	6.00		.024	4(ft)
2N6107	PNP	7.00	70	80	65	30.000	2.00	3.50	7.00		3.000	10(ft)
2N6109	PNP	7.00	50	60	65	30.000	2.50	3.50	7.00		3.000	10(ft)
2N6121	NPN	4.00	45	45	40	25.000	1.50	.60	1.50		.150	2(ft)
2N6122	NPN	4.00	60	60	40	25.000	1.50	.60	1.50		.150	2(ft)
2N6123	NPN	4.00	80	80	40	20.000	1.50	.60	1.50		.150	2(ft)
2N6124	PNP	4.00	45	45	40	25.000	1.50	.60	1.50		.150	2(ft)
2N6125	PNP	4.00	60	60	40	25.000	1.50	.60	1.50		.150	2(ft)
2N6126	PNP	4.00	80	80	40	20.000	1.50	.60	1.50		.150	2(ft)
2N6212	PNP	2.00	300	350	35	10.000	1.00	1.60	1.00		.125	.60(tf)
2N6213	PNP	2.00	350	400	35	10.000	1.00	2.00	1.00		.125	.60(tf)
2N6229	PNP	10.0	100	100	150	25.000	5.00	1.00	7.50		.750	1(ft)
2N6230	PNP	10.0	120	120	150	20.000	5.00	1.00	7.50		.750	1(ft)
2N6231	PNP	10.0	140	140	150	15.000	5.00	1.00	7.50		.750	1(ft)
2N6233	NPN	5.00	225	250	50	25.000	1.00	.50	1.00		.100	.50(tf)
2N6234	NPN	5.00	275	300	50	25.000	1.00	.50	1.00		.100	.50(tf)
2N6235	NPN	5.00	325	350	50	25.000	1.00	.50	1.00		.100	.50(tf)
2N6249	NPN	15.0	200	300	175	10.000	10.00	1.50	10.00		1.000	1.00(tf)
2N6250	NPN	15.0	275	375	175	8.000	10.00	1.50	10.00		1.250	1.00(tf)
2N6251	NPN	15.0	350	450	175	6.000	10.00	1.50	10.00		1.670	1.00(tf)
2N6274	NPN	50.0	100	120	250	30.000	20.00	1.00	20.00		2.000	.25(tf)
2N6275	NPN	50.0	120	140	250	30.000	20.00	1.00	20.00		2.000	.25(tf)
2N6276	NPN	50.0	140	160	250	30.000	20.00	1.00	20.00		2.000	.25(tf)
2N6277	NPN	50.0	150	180	250	30.000	20.00	1.00	20.00		2.000	.25(tf)
2N6282	NPN	20.0	60	60	160	750.00	10.00	2.00	10.00		.040	4(ft)

Motorola Power Transistors Short Form Device Characteristics

DEVICE	Polarity	IC max cont	Vceo sus V	Vcev or Vcbo	Pd W	Hfe min	@ IC amps	Vce sat max	@ IC amps	&	@ Ib amps	tf microS or ft Mhz
2N6283	NPN	20.0	80	80	160	750.00	10.00	2.00	10.00		.040	4(ft)
2N6284	NPN	20.0	100	100	160	750.00	10.00	2.00	10.00		.040	4(ft)
2N6285	PNP	20.0	60	60	160	750.00	10.00	2.00	10.00		.040	4(ft)
2N6286	PNP	20.0	80	80	160	750.00	10.00	2.00	10.00		.040	4(ft)
2N6287	PNP	20.0	100	100	160	750.00	10.00	2.00	10.00		.040	4(ft)
2N6290	NPN	7.00	50	60	65	30.000	2.50	3.50	7.00		3.000	4(ft)
2N6292	NPN	7.00	70	80	65	30.000	2.00	3.50	7.00		3.000	4(ft)
2N6298	PNP	8.00	60	60	75	750.00	4.00	2.00	4.00		.016	4(ft)
2N6299	PNP	8.00	80	80	75	750.00	4.00	2.00	4.00		.016	4(ft)
2N6300	NPN	8.00	60	60	75	750.00	4.00	2.00	4.00		.016	4(ft)
2N6301	NPN	8.00	80	80	75	750.00	4.00	2.00	4.00		.016	4(ft)
2N6306	NPN	8.00	250	500	125	15.000	3.00	.80	3.00		.600	.40(tf)
2N6307	NPN	8.00	300	600	125	15.000	3.00	1.00	3.00		.600	.40(tf)
2N6308	NPN	8.00	350	700	125	12.000	3.00	1.50	3.00		.600	.40(tf)
2N6315	NPN	7.00	60	60	90	20.000	2.50	1.00	4.00		.400	.80(tf)
2N6316	NPN	7.00	80	80	90	20.000	2.50	1.00	4.00		.400	.80(tf)
2N6317	PNP	7.00	60	60	90	20.000	2.50	1.00	4.00		.400	.80(tf)
2N6318	PNP	7.00	80	80	90	20.000	2.50	1.00	4.00		.400	.80(tf)
2N6338	NPN	25.0	100	120	200	30.000	10.00	1.00	10.00		1.000	.25(tf)
2N6339	NPN	25.0	120	140	200	30.000	10.00	1.00	10.00		1.000	.25(tf)
2N6340	NPN	25.0	140	160	200	30.000	10.00	1.00	10.00		1.000	.25(tf)
2N6341	NPN	25.0	150	180	200	30.000	10.00	1.00	10.00		1.000	.25(tf)
2N6420	PNP	2.00	175	250	35	40.000	.50	5.00	1.00		.125	10(ft)
2N6421	PNP	2.00	250	375	35	25.000	1.00	.75	1.00		.125	3.00(tf)
2N6422	PNP	2.00	300	500	35	25.000	1.00	.75	1.00		.125	3.00(tf)
2N6486	NPN	15.0	40	50	75	20.000	5.00	1.30	5.00		.500	5(ft)
2N6487	NPN	15.0	60	70	75	20.000	5.00	1.30	5.00		.500	5(ft)
2N6488	NPN	15.0	80	90	75	20.000	5.00	1.30	5.00		.500	5(ft)
2N6489	PNP	15.0	40	50	75	20.000	5.00	1.30	5.00		.500	5(ft)
2N6490	PNP	15.0	60	70	75	20.000	5.00	1.30	5.00		.500	5(ft)
2N6491	PNP	15.0	80	90	75	20.000	5.00	1.30	5.00		.500	5(ft)
2N6497	NPN	5.00	250	350	80	10.000	2.50	1.00	2.50		.500	.80(tf)
2N6498	NPN	5.00	300	400	80	10.000	2.50	1.25	2.50		.500	.80(tf)
2N6499	NPN	5.00	350	450	80	10.000	2.50	1.50	2.50		.500	.80(tf)
2N6542	NPN	5.00	300	650	100	12.000	1.50	1.00	3.00		.600	.80(tf)
2N6543	NPN	5.00	400	850	100	12.000	1.50	1.00	3.00		.600	.80(tf)
2N6544	NPN	8.00	300	650	125	12.000	2.50	1.50	5.00		1.000	.90(tf)
2N6545	NPN	8.00	400	850	125	12.000	2.50	1.50	5.00		1.000	.90(tf)
2N6546	NPN	15.0	300	650	175	6.000	10.00	1.50	10.00		2.000	1.50(tf)
2N6547	NPN	15.0	400	850	175	6.000	10.00	1.50	10.00		2.000	1.50(tf)
2N6576	NPN	15.0	60	60	120	2000.0	4.00	2.80	10.00		.100	7.00(tf)
2N6577	NPN	15.0	90	90	120	2000.0	4.00	2.80	10.00		.100	7.00(tf)
2N6578	NPN	15.0	120	120	120	2000.0	4.00	2.80	10.00		.100	7.00(tf)
2N6609	PNP	16.0	140	160	150	15.000	8.00	1.40	8.00		.800	

Thyristors and Triggers

Motorola's extensive line of thyristors consists of two generic component categories—SCRs and Triacs. Within each of these categories are two basic packaging divisions, plastic and metal—plastic for lowest cost and metal hermetically sealed packages for applications requiring highest reliability. Combined, these divisions include a large number of individual devices covering a forward-current range from 0.5 to 55 Amperes and a blocking voltage range from 15 to 800 Volts.

Motorola also offers an extensive line of trigger devices—UJTs, PUTs, Diacs, SBSs, and Opto-coupled Triac Drivers—to meet a wide variety of triggering requirements.

Table of Contents

	Page
SCRs	16- 2
TRIACs	16-12
Trigger Devices	16-20

SCRs

. . . Metal or Plastic Packages
. . . 0.8 to 55 Amperes RMS
. . . 25 to 800 Volts
. . . Industry Standards, with a variety of Custom Specifications.

		ON-STATE (RMS) CURRENT			
		0.8 AMP		1.6 AMPS	
		Sensitive Gate			Sensitive Gate
		Case 29-02 TO-82 Style 10		Case 29-02 TO-39 Style 3	
V_{DRM} V_{RRM}	25 V	BRX44 BRY55-30	MCR102 2N5060		2N2322
	50 V	BRX45 BRY55-60	MCR103 2N5061	2N1595	2N2323
	100 V	BRX46 BRY55-100	MCR104 2N5062	2N1596	2N2324
	200 V	BRX47 BRY55-200	2N5064	2N1597	2N2326
	300 V	BRX48 BRY55-300	●	●	●
	400 V	BRX49 BRX55-400	MCR100-6	2N1599	2N2329
	500 V	BRY55-500	MCR100-7		
	600 V	BRY55-600	MCR100-8		
	700 V				
	800 V				
MAXIMUM ELECTRICAL CHARACTERISTICS	I_{TSM} (Amps)	10	10	15	15
	I_{GT} (mA)	0.2	0.2	10	0.2
	V_{GT} (V)	0.8	0.8	3.0	0.8
	I_H (mA)	5.0	5.0	5.0 Typ	2.0

● Intermediate Voltage Available

ON-STATE (RMS) CURRENT								
4.0 AMPS			8.0 AMPS					
	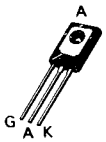							
Sensitive Gate					Sensitive Gate			
Case 29-02 TO-92 Style 28	Case 77-04 TO-128 Style 2		Case 90-05 Style 1	Case 221A-02 TO-220AB Style 3		Case 86 Style 1		
	MCR106-1 2N6236	●				2N4167	25 V	V_{DRM}
MCR606-2	MCR106-2 2N6237	C106F1	2N4441	C122F1 S2800F		2N4168	50 V	
MCR606-3	MCR106-3 2N6238	C106A1		C122A1 S2800A	MCR72-3	2N4169	100 V	
MCR606-4	MCR106-4 2N6239	C106B1	2N4442	C122B1 S2800B	MCR72-4	2N4170	200 V	
●	●	●		●	●	●	300 V	
MCR606-6	MCR106-6 2N6240	C106D1	2N4443	C122D1 S2800D	MCR72-6	2N4172	400 V	
MCR606-7	MCR106-7	C106E1		C122E1 S2800E	●	2N4173	500 V	
MCR606-8	MCR106-8 2N6241	C106M1	2N4444	C122M1 S2800M	MCR72-8	2N4174	600 V	
							700 V	
							800 V	
20	25	20	80	C122/S2800 90/100	100	100	I_{TSM} (Amps)	MAXIMUM ELECTRICAL CHARACTERISTICS
0.2	0.2	0.2	30	C122/S2800 25/15	0.2	30	I_{GT} (mA)	
0.8	1.0	0.8	1.5	1.5	1.5	1.5	V_{GT} (V)	
3.0	5.0	3.0	40	C122/S2800 30/20	6.0	30	I_H (mA)	

● Intermediate Voltage Available

		ON-STATE (RMS) CURRENT		
		12 AMPS	12.5 AMPS	16 AMPS
		Case 221A-02 TO-220AB Style 3	Case 54 Style 2	Case 221A-02 TO-220AB Style 3
V_{DRM} V_{RRM}	25 V			
	50 V	2N6394		2N6400
	100 V	2N6395	2N3668	2N6401
	200 V	2N6396	2N3669	2N6402
	300 V	●		
	400 V	2N6397	2N3670	2N6403
	500 V	●	2N4103	
	600 V	2N6398		2N6404
	700 V	●		MCR221-9
	800 V	2N6399		
MAXIMUM ELECTRICAL CHARACTERISTICS	I_{TSM} (Amps)	100	200	160
	I_{GT} (mA)	30	40	30
	V_{GT} (V)	1.5	2.0	1.5
	I_H (mA)	40	20 Typ	40

● Intermediate Voltage Available

ON-STATE (RMS) CURRENT							
20 AMPS							
		Isolated					
Case 310 Style 1	Case 263 Style 1	Case 311-01 Style 1	Case 54 Style 2	Case 174-03 TO-203AA Style 1	Case 175-02 Style 1		
						25 V	V_{DRM} V_{RRM}
2N5164	2N5168		●	●	●	50 V	
●	●	2N6167	MCR649AP3	MCR3818-3	MCR3918-3	100 V	
2N5165	2N5169	2N6168	MCR649AP4	MCR3818-4	MCR3918-4	200 V	
●	●	●	●	●	●	300 V	
2N5166	2N5170	2N6169	MCR649AP6	MCR3818-6	MCR3918-6	400 V	
●	●	●	MCR649AP7	●	●	500 V	
2N5167	2N5171	2N6170	MCR649AP8	MCR3818-8	MCR3918-8	600 V	
			●	●	●	700 V	
			MCR649AP10	MCR3818-10	MCR3918-10	800 V	
240			260	240	240	I_{TSM} (Amps)	MAXIMUM ELECTRICAL CHARACTERISTICS
40			40	40	40	I_{GT} (mA) 25 °C	
1.5			3.5	1.5	1.5	V_{GT} (V) 25 °C	
50			20 Typ	50	50	I_H (mA) 25 °C	

● Intermediate Voltage Available

		ON-STATE (RMS) CURRENT					
		25 AMPS					
					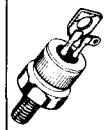		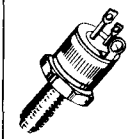 Isolated
		Case 221A-02 TO-220AB Style 3	Case 342-01 Style 1	Case 61 TO-41 Style 1	Case 263-03 Style 1	Case 175-02 Style 1	Case 235-02 Style 1
V_{DRM} V_{RRM}	25 V			2N2573	2N681		
	50 V	2N6504		2N2574	2N682		
	100 V	2N6505		2N2575	2N683	C230A	C230A3
	200 V	2N6506	MCR525-4	2N2576	2N685	C230B	C230B3
	300 V		●	●	●	●	●
	400 V	2N6507	MCR525-6	2N2578	2N688	C230D	C230D3
	500 V		●	●	●	●	●
	600 V	2N6508	MCR525-8	MCR649A8	2N690	C230M	C230M3
	700 V		●	●	●		
	800 V	2N6509	MCR525-10	MCR649A10	2N692		
MAXIMUM ELECTRICAL CHARACTERISTICS	I_{TSM} (Amps)	300	300	260	150	250	250
	I_{GT} (mA) 25 °C	40	40	40	40	9.0	9.0
	V_{GT} (V) 25 °C	1.5	1.5	3.5	2.0	1.5	1.5
	I_H (mA) 25 °C	40	40	20 Typ	5.0	50	50

● Intermediate Voltage Available

ON-STATE (RMS) CURRENT							
25 AMPS	35 AMPS						
					Isolated		
Case 174-03 TO-203AA Style 1	Case 174-03 TO-203AA Style 1	Case 175-02 Style 1	Case 310-01 Style 1	Case 263-03 Style 1	Case 311-01 Style 1		
	MCR3835-1	MCR3935-1				25 V	V_{DRM} V_{RRM}
	MCR3835-2	MCR3935-2				50 V	
C232A	2N3870	2N3896	C229A	C228A	2N6171	100 V	
C232B	2N3871	2N3897	C229B	C228B	2N6172	200 V	
●	●	●	●	●	●	300 V	
C232D	2N3872	2N3898	C229D	C228D	2N6173	400 V	
C232E	●	●	●	●	●	500 V	
C232M	2N3873 MCR3835-8	2N3899 MCR3935-8	C229M	C228M	2N6174	600 V	
	●	●				700 V	
	MCR3835-10	MCR3935-10				800 V	
250	350	350	300	300	350	I_{TSM} (Amps)	MAXIMUM ELECTRICAL CHARACTERISTICS
25	40	40	40	40	40	I_{GT} (mA) 25 °C	
1.5	1.6	1.6		2.5	1.6	V_{GT} (V) 25 °C	
50	50	50	75	75	50	I_H (mA) 25 °C	

● Intermediate Voltage Available

		ON-STATE (RMS) CURRENT 55 AMPS		
				Isolated
		Case 310-01 Style 1	Case 263-03 Style 1	Case 311-01 Style 1
V_{DRM} V_{RRM}	25 V	●	●	●
	50 V	●	●	●
	100 V	MCR63-3	MCR64-3	MCR65-3
	200 V	●	●	●
	300 V	●	●	●
	400 V	MCR63-6	MCR64-6	MCR65-6
	500 V	●	●	●
	600 V	MCR63-8	MCR64-8	MCR65-8
	700 V	●	●	●
	800 V	MCR63-10	MCR64-10	MCR65-10
MAXIMUM ELECTRICAL CHARACTERISTICS	I_{TSM} (Amps)	550	550	550
	I_{GT} (mA) 25°C	40	40	40
	V_{GT} (V) 25 °C	3.0	3.0	3.0
	I_H (mA) 25 °C	60	60	60

● Intermediate Voltage Available

RADAR MODULATORS

ON-STATE PULSE CURRENT				
100 AMPS		1000 AMPS		
Case 63-03 TO-64 Style 1		Case 263-03 Style 1		
			25 V	V_{DRM}
			50 V	
			100 V	
			200 V	
2N4199			300 V	
2N4200	MCR729-6	MCR1718-6	400 V	
2N4201	MCR729-7	MCR1718-7	500 V	
2N4202	MCR729-8	MCR1718-8	600 V	
2N4203			700 V	
2N4204	MCR729-10		800 V	
100*	100*	1000*	I_{TSM} (Amps)	MAXIMUM ELECTRICAL CHARACTERISTICS
50	50	50	I_{GT} (mA)	
1.5	1.5	1.5	V_{GT} (V)	
105 °C 3.0 Min	3.0 Min	5.0 Min	I_H (mA)	

* Indicates Pulse Rating

CROWBAR SCRs

		PEAK CAPACITOR DISCHARGE CURRENT (1)						
		300 AMPS			750 AMPS		850 AMPS	1700 AMPS
					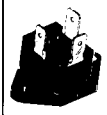		
		Case 86 Style 1	Case 342-01 Style 1	Case 221A-02 Style 3		Case 342-01 Style 1	Case 175-02 Style 1	Case 263-03 Style 1
V_{DRM} or V_{RRM}	25 V	MCR67-1	MCR568-1	MCR68-1	MCR69-1	MC569-1	MCR70-1	MCR71-1
	50 V	MCR67-2	MCR568-2	MCR68-2	MCR69-2	MCR569-2	MCR70-2	MCR71-2
	100 V	MCR67-3	MCR568-3	MCR68-3	MCR69-3	MCR569-3	MCR70-3	MCR71-3
ELECTRICAL CHARACTERISTICS Maximum or Min/Max	$I_{T(RMS)}$ (Amps)	12	12	12	25	25	35	55
	I_{GT} (mA) 25 °C Min/Max	2/30	2/30	2/30	2/30	2/30	2/30	2/30
	V_{GT} (V) 25 °C	1.5	1.5	1.5	1.5	1.5	1.5	1.5
	I_H (mA) 25 °C Min/Max	3/50	3/50	3/50	3/50	3/50	3/50	3/50
	I_L (mA) 25 °C	60	60	60	60	60	60	60

(1) The peak capacitor discharge current is for t_w = 1.0 ms. t_w is defined as 5 time constants of an exponentially decaying current pulse.

CD IGNITION

CAPACITOR DISCHARGE CURRENT (2)				
150 AMPS				
KGA	K_{AG}	G_{AK}		
Case 29-02 TO 92 Style 10	Case 29-02 TO 92 Style 28	Case 77-04 TO-126 Style 12		
			25 V	V_{DRM} or V_{RRM}
MCR22-2	MCR23-2	C106 F	50 V	
MCR22-3	MCR23-3	C106 A	100 V	
MCR22-4	MCR23-4	C106 B	200 V	
MCR22-5	MCR23-5	C106 C	300 V	
MCR22-6	MCR23-6	C106-D	400 V	
MCR22-7	MCR23-7	C106 E	500 V	
MCR22-8	MCR23-8	C106 M	600 V	
15	15	20	I_{TSM}	ELECTRICAL CHARACTERISTICS Maximum or Min/Max
0.2	0.2	0.2	I_{GT}	
0.8	0.8	0.8	V_{GT}	

(2) Exponential decay for sinusoidal 1 μs 10 Hz pulse widths.

TRIACs

. . . Metal or Plastic Packages
. . . 0.6 to 40 Amperes
. . . 25 to 800 Volts
. . . Industry Standards

		ON-STATE (RMS) CURRENT					
		0.6 AMP					
		Sensitive Gate					
		Case 29-02 TO-92 Style 12					
V_{DRM}	25 V						
	50 V	●	●	●	●	●	●
	100 V	MAC91-3	MAC91A3	MAC92-3	MAC92A3	MAC93-3	MAC93A3
	200 V	MAC91-4	MAC91A4	MAC92-4	MAC92A4	MAC93-4	MAC93A4
	300 V						
	400 V	MAC91-6	MAC91A6	MAC92-6	MAC92A6	MAC93-6	MAC93-6
	500 V	●	●	●	●	●	●
	600 V	MAC91-8	MAC91A8	MAC92-8	MAC92A8	MAC93-8	MAC93A8
	700 V						
	800 V						
MAXIMAL ELECTRICAL CHARACTERISTICS	I_{TSM} (Amps)	8.0	8.0	8.0	8.0	8.0	8.0
	I_{GT} 25°C (MA)						
	MT2(+)G(+)	10	10	5.0	5.0	3.0	3.0
	MT2(+)G(−)	10	10	5.0	5.0	3.0	3.0
	MT2(−)G(−)	10	10	5.0	5.0	3.0	3.0
	MT2(−)G(+)	–	10	–	5.0	–	3.0
	V_{GT} 25°C (V)						
	MT2(+)G(+)	2.5	2.5	2.5	2.5	2.5	2.5
	MT2(+)G(−)	2.5	2.5	2.5	2.5	2.5	2.5
	MT2(−)G(−)	2.5	2.5	2.5	2.5	2.5	2.5
	MT2(−)G(+)	–	2.0	–	2.0	–	2.0

● Intermediate Voltage Available

ON-STATE (RMS) CURRENT				
2.5 AMPS		3.0 AMPS		
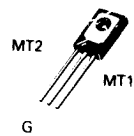				
Sensitive Gate Case 77-04 Style 7				
			25 V	V_{DRM}
			50 V	
T2301PA	T2302PA	SC136A	100 V	
T2301PB	T2302PB	SC136B	200 V	
			300 V	
T2301PD	T2302PD	SC136D	400 V	
T2301PE	T2302PE	SC136E	500 V	
T2301PM	T2302PM	SC136M	600 V	
			700 V	
			800 V	
25	25	30	I_{TSM} (Amps)	MAXIMUM ELECTRICAL CHARACTERISTICS
			I_G 25°C (MA)	
4.0	10	25	MT2(+)G(+)	
4.0	10	25	MT2(+)G(−)	
4.0	10	25	MT2(−)G(−)	
4.0	10		MT2(−)G(+)	
			V_{GT} 25°C (V)	
2.2	2.2	2.0	MT2(+)G(+)	
2.2	2.2	2.0	MT2(+)G(−)	
2.2	2.2	2.0	MT2(−)G(−)	
2.2	2.2		MT2(−)G(+)	

		ON-STATE (RMS) CURRENT					
		4.0 AMPS			6.0 AMPS		
		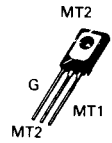					
			Sensitive Gate				
		Case 77-04 Style 5			Case 221A-02 TO-220AB Style 4		
V_{DRM}	25 V	2N6068	2N6068A	2N6068B			
	50 V	2N6069	2N6069A	2N6069B			
	100 V	2N6070	2N6070A	2N6070B			
	200 V	2N6071	2N6071A	2N6071B	T2500B	MAC216-4 MAC216A4	SC141B
	300 V						
	400 V	2N6073	2N6073A	2N6073B	T2500D	MAC216-6 MAC216A6	SC141D
	500 V	2N6074	2N6074A	2N6074B	T2500E	MAC216-7 MAC216A7	SC141E
	600 V	2N6075	2N6075A	2N6075B	T2500M	MAC216-8 MAC216A8	SC141M
	700 V						
	800 V						
MAXIMAL ELECTRICAL CHARACTERISTICS	I_{TSM} (Amps)	30	30	30	60	60	80
	I_{GT} 25°C (MA)						
	MT2(+)G(+)	30	5.0	3.0	25	50	50
	MT2(+)G(−)	–	5.0	3.0	60	50	50
	MT2(−)G(−)	30	5.0	3.0	25	50	50
	MT2(−)G(+)	–	10	5.0	60	70#	–
	V_{GT} 25°C (V)	−40°C	−40°C	−40°C			
	MT2(+)G(+)	2.5	2.5	2.5	2.5	2.5	2.5
	MT2(+)G(−)	–	2.5	2.5	2.5	2.5	2.5
	MT2(−)G(−)	2.5	2.5	2.5	2.5	2.5	2.5
	MT2(−)G(+)	–	2.5	2.5	2.5	2.5#	–

#/A only

ON-STATE (RMS) CURRENT						
8.0 AMPS						
			Sensitive Gate			
Case 221A-02 TO-220AB Style 4						
					25 V	V_{DRM}
					50 V	
			MAC228-3	MAC228A3	100 V	
2N6342 2N6346	T2800B	T2802B	MAC228-4	MAC228A4	200 V	
					300 V	
2N6343 2N6347	T2800D	T2802D	MAC228-6	MAC228A6	400 V	
	●	●	●	●	500 V	
2N6344 2N6348	T2800M	T2802M	MAC228-8	MAC228A8	600 V	
					700 V	
2N6345 2N6349					800 V	
100	100	100	80	80	I_{TSM} (Amps)	MAXIMUM ELECTRICAL CHARACTERISTICS
					I_{GT} 25°C (MA)	
50	25	50	5.0	10	MT2(+)G(+)	
75#	60	–	5.0	10	MT2(+)G(−)	
50	25	50	5.0	10	MT2(−)G(−)	
75#	60	–	–	10	MT2(−)G(+)	
					V_{GT} 25°C (V)	
2.0	2.5	2.5	2.2	2.5	MT2(+)G(+)	
2.5#	2.5	–	2.2	2.5	MT2(+)G(−)	
2.5	2.5	2.5	2.2	2.5	MT2(−)G(−)	
2.5#	2.5	–	–	2.5	MT2(−)G(+)	

● Intermediate Voltage Available
# Denotes 2N6346-49

		ON-STATE (RMS) CURRENT					
		10 AMPS				12 AMPS	
					Isolated		
		Case 221A-02 TO-220AB Style 4	Case 174-03 TO-203AA Style 3	Case 175-02 Style 3	Case 235-02 Style 2	Case 221A-02 TO-220AB Style 4	
V_{DRM}	25 V						
	50 V						
	100 V						
	200 V	SC146B	2N5567	2N5569	T4121B	2N6342A	2N6346A
	300 V						
	400 V	SC146D	2N5568	2N5570	T4121D	2N6343A	2N6347A
	500 V		T4101E	T4111E	T4121E		
	600 V	SC146M	T4101M	T4111M	T4121M	2N6344A	2N6348A
	700 V						
	800 V				T4121N	2N6345A	2N6349A
I_{TSM} (Amps)		120	100	100	100	120	120
I_{GT} 25°C (MA)							
MT2(+)G(+)		50	25	25	25	50	50
MT2(+)G(−)		50	40	40	40	–	75
MT2(−)G(−)		50	25	25	25	50	50
MT2(−)G(+)			40	40	40	–	75
V_{GT} 25°C (V)							
MT2(+)G(+)		2.5	2.5	2.5	2.5	2.0	2.0
MT2(+)G(−)		2.5	2.5	2.5	2.5	–	2.5
MT2(−)G(−)		2.5	2.5	2.5	2.5	2.0	2.0
MT2(−)G(+)		–	2.5	2.5	2.5	–	2.5

ON-STATE (RMS) CURRENT								
15 AMPS								
		Isolated	Isolated					
Case 174-03 TO-203AA Style 3	Case 175-02 Style 3	Case 311-01 Style 2	Case 235-02 Style 2	Case 221A-02 TO-220AB Style 4		Case 342-01 Style 1		
							25 V	V_{DRM}
							50 V	
							100 V	
2N5571	2N5573	2N6145	T4120B	MAC15-4	MAC15A4		200 V	
							300 V	
2N5572	2N5574	2N6146	T4120D	MAC15-6	MAC15A6	MAC515-6 MAC515A6	400 V	
							500 V	
T4100M	T4110M	2N6147	T4120M	MAC15-8	MAC15A8	MAC515-8 MAC515A8	600 V	
							700 V	
				MAC15-10	MAC15A10	MAC515-10 MAC515A10	800 V	
100	100	100	100	150	150	150	I_{TSM} (Amps)	
							I_G 25°C (MA)	
50	50	50	50	50	50	50	MT2(+)G(+)	
80	80	80	80	–	75	75	MT2(+)G(–)	
50	50	50	50	50	50	50	MT2(–)G(–)	
80	80	80	80	–	75	75†	MT2(–)G(+)	
							V_{GT} 25°C (V)	
2.5	2.5	2.5	2.5	2.0	2.0	2.0	MT2(+)G(+)	
2.5	2.5	2.5	2.5	–	2.5	2.5	MT2(+)G(–)	
2.5	2.5	2.5	2.5	2.0	2.0	2.0	MT2(–)G(–)	
2.5	2.5	2.5	2.5	–	2.5	2.5	MT2(–)G(+)	

† On A Series only

		ON-STATE (RMS) CURRENT					
		25 AMPS					
			Isolated		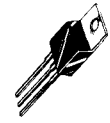		
		Case 263-03 Style 2	Case 311-01 Style 2	Case 310-01 Style 2	Case 221A-02 TO-220AB Style 4		Case 342-01 Style 1
V_{DRM}	25 V						
	50 V						
	100 V						
	200 V	SC260B	SC260B3	SC261B	MAC223-4	MAC223A4	
	300 V						
	400 V	SC260D	SC260D3	SC261D	MAC223-6	MAC223A6	MAC525-6 MAC525A6
	500 V	SC260E	SC260E3	SC261E	●	●	●
	600 V	SC260M	SC260M3	SC261M	MAC223-8	MAC223A8	MAC525-8 MAC525A8
	700 V				●	●	●
	800 V				MAC223-10	MAC223A10	MAC525-10 MAC525A10
I_{TSM} (Amps)		250	250	250	250	250	250
I_{GT} 25°C (MA)							
MT2(+)G(+)		50	50	50	50	50	50
MT2(+)G(−)		50	50	50	50	50	50
MT2(−)G(−)		50	50	50	50	50	50
MT2(−)G(+)		–	–	–	–	75	75†
V_{GT} 25°C (V)							
MT2(+)G(+)		2.5	2.5	2.5	2.0	2.0	2.0
MT2(+)G(−)		2.5	2.5	2.5	2.0	2.0	2.0
MT2(−)G(−)		2.5	2.5	2.5	2.0	2.0	2.0
MT2(−)G(+)		–	–	–	–	2.5	2.5

† On A Series only

● Intermediate Voltage Available

ON-STATE (RMS) CURRENT											
30 AMPS					40 AMPS						
	Isolated							Isolated	Hermetic and Isolated		
Case 263-03 Style 2	Case 311-01 Style 2		Case 174-03 TO-203AA Style 3	Case 310-01 TO-230AB Style 2	Case 263-03 Style 2			Case 311-01 Style 2	Case 326-01 Style 2		
											25 V
											50 V
											100 V
2N6160	2N6163		2N6157		2N5441	2N5444					200 V
											300 V
2N6161	2N6164		2N6158		2N5442	2N5445		T6420D	MAC50-6	MAC50A6	400 V
											500 V
2N6162	2N6165		2N6159		2N5443	2N5446		T6420M	MAC50-8	MAC50A8	600 V
											700 V
		T6421N		T6401N			T6410N	T6420N	MAC50-10	MAC50A10	800 V
250	250	300	250	300	300	300	300	300	300	300	I_{TSM} (Amps)
											I_G 25°C (MA)
60	60	50	60	50	70	70	50	50	70	70	MT2(+)G(+)
70	70	80	70	80	70	70	80	80	70	70	MT2(+)G(−)
70	70	50	70	50	70	70	50	50	70	70	MT2(−)G(−)
100	100	80	100	80	100	100	80	80	–	100	MT2(−)G(+)
											V_{GT} 25°C (V)
2.0	2.0	2.5	2.0	2.5	2.0	2.0	2.5	2.5	2.0	2.0	MT2(+)G(+)
2.1	2.1	2.5	2.1	2.5	2.0	2.0	2.5	2.5	2.0	2.0	MT2(+)G(−)
2.1	2.1	2.5	2.1	2.5	2.0	2.0	2.5	2.5	2.0	2.0	MT2(−)G(−)
2.5	2.5	2.5	2.5	2.5	2.5	2.5	2.5	2.5	–	2.5	MT2(−)G(+)

* indicates that device types are UL recognized, file # E69369

TRIGGER DEVICES

. . . Wide Range of Sensitivities
. . . Input Characteristics for Most Applications
. . . Industry Standards, with a variety of Custom Specifications available.

UJT

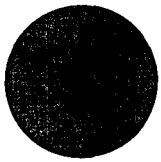

UNIJUNCTION TRANSISTORS — UJT

Highly stable devices for general-purpose trigger applications and as pulse generators (oscillators) and timing circuits. Useful at frequencies ranging (generally) from 1 Hz to 1 MHz. Available in low-cost plastic package (TO-92) and in hermetically sealed metal package (Case 22A).

UNIJUNCTION TRANSISTORS — (UJT)

Package	Device Type	η Min	η Max	I_P μA Max	I_{EB20} μA Max	I_V mA Min
Plastic Case 29-02 (TO-92)	MU10	0.50	0.85	5.0	1.0	1.0
	2N4870	0.56	0.75	5.0	1.0	2.0
	2N4871	0.70	0.85	5.0	1.0	4.0
	MU2646	0.56	0.75	5.0	12	4.0
	MU4891	0.55	0.82	5.0	0.01	2.0
	MU4892	0.51	0.69	2.0	0.01	2.0
	MU4893	0.55	0.82	2.0	0.01	2.0
	MU4894	0.74	0.86	1.0	0.01	2.0
Metal Case 22A-01 (TO-18)	MU20	0.50	0.85	5.0	1.0	1.0
	2N2646	0.56	0.75	5.0	12	4.0
	2N2647	0.68	0.82	2.0	0.2	8.0
	2N3980	0.68	0.82	2.0	0.01	1.0
	2N4851	0.56	0.75	2.0	0.1	2.0
	2N4852	0.70	0.85	2.0	0.1	4.0
	2N4853	0.70	0.85	0.4	0.05	6.0
	2N4948*	0.55	0.82	2.0	0.01	2.0
	2N4949*	0.74	0.86	1.0	0.01	2.0
	2N5431*	0.72	0.80	0.4	0.01	2.0

*Also available as JAN and JANTX devices.

PUT

PROGRAMMABLE UNIJUNCTION TRANSISTORS — PUT

Similar to UJTs, except that I_V, I_P and intrinsic standoff voltage are programmable (adjustable) by means of external voltage divider. This stabilizes circuit performance for variations in device parameters. General operating frequency range is from 0.01 Hz to 10 kHz, making them suitable for long-duration timer circuits. Two-package availability provides cost option.

PROGRAMMABLE UNIJUNCTION TRANSISTORS — (PUT)

Package		Device Type	P R_G = 10 kΩ μA Max	P R_G = 1.0 MΩ μA Max	I_{GAO} @ 40V nA Max	I_V R_G = 10 kΩ μA Min	I_V R_G = 1.0 MΩ μA Max
Plastic Case 29-02 TO-92	A G K	2N6027	5.0	2.0	10	70	50
		2N6028	1.0	0.15	10	25	25
		MPU6027	5.0	2.0	10	70	50
		MPU6028	1.0	0.15	10	25	25
	K G A	MPU131	5.0	2.0	5.0	70	50
		MPU132	2.0	0.3	5.0	50	50
		MPU133	1.0	0.15	5.0	50	25
Metal Case 22-03 TO-18		2N6116*	5.0	2.0	5.0	70	50
		2N6117*	2.0	0.3	5.0	50	50
		2N6118*	1.0	0.15	5.0	50	25

*Also available as JAN and JANTX devices.

BILATERAL TRIGGERS — (DIACs)			
Package	**Device Type**	**Vs Volts**	**Is μA Max**
Plastic Case 182-02 TO-92	1N5758 y	20 ± 4.0	100
	1N5761 y	32 ± 4.0	100
	1N5758A	20 ± 2.0	25
	1N5761A	32 ± 2.0	25

DIACs

BILATERAL TRIGGERS — DIACs
Specifically designed as low-cost bidirectional triggers in line-operated Triac control circuits such as light dimmers, motor controls, and temperature controls.

SILICON BIDIRECTIONAL SWITCH — (SBS)					
Package	**Device Type**	**Vs Volts**		**Is μA Max**	**IH mA Max**
		Min	**Max**		
Plastic Case 29-02 TO-92	MBS4991	6.0	10	500	1.5
	MBS4992	7.5	9.0	120	0.5

SBS

SILICON BIDIRECTIONAL SWITCH — SBS
Applications similar to DIAC, but has gate electrode that permits synchronization.

16

Rectifiers

From tiny, lead-mounted, low-current rectifiers to powerful 75 Amp Schottky Rectifier: from conventional diode junctions to special-purpose units for specific applications, Motorola's extensive line of rectifiers satisfies every possible requirement for electronic equipment. Moreover, volume production unmatched in the industry offers low-cost selection potential.

Table of Contents

	Page
General-Purpose Rectifiers	17- 2
Industrial Standard Recovery Rectifiers	17- 4
Fast Recovery Rectifiers	17- 7
Ultra-Fast Recovery Epitaxial Diodes	17-11
Schottky Rectifiers	17-14
Special Purpose Rectifiers	17-16
Rectifier Bridges	17-17

General-Purpose Rectifiers

Motorola offers a wide variety of low-cost devices, packaged to meet diverse mounting requirements. Of particular interest are plastic "buttons", *such as the* MR2500 *series, designed for clip or recessed mounting, and the new* plastic chassis mounts, *derived from these buttons, types* MR2000S *and* BYW90. *All listed lines are available with anode-to-case connection by adding "R" suffix to the standard part number.*

	I_O, AVERAGE RECTIFIED FORWARD CURRENT (Amperes)									
	1.0		1.5		3.0				6.0	12
	59-04				60 Metal	267 Plastic			194 Plastic	56-02 (DO-4) Metal
V_{RRM} Volts										
50	1N4001		1N5391	BY601	1N4719	MR500	1N5400		MR750	MR1120* 1N1199B
100	1N4002		1N5392	BY602	1N4720	MR501	1N5401		MR751	MR1121 1N1200B
200	1N4003	BY135	1N5393	BY603	1N4721	MR502	1N5402	BY251	MR752	MR1122 1N1202B
400	1N4004		1N5395	BY604	1N4722	MR504	1N5404	BY252	MR754	MR1124 1N1204B
600	1N4005	BY126/134	1N5397	BY605	1N4723	MR506	1N5406	BY253	MR756	MR1126 1N1206B
800	1N4006		1N5398	BY606	1N4724	MR508	1N5407	BY254	MR758	MR1128
1000	1N4007		1N5399	BY607	1N4725	MR510	1N5408		MR760	MR1130
1300		BY127/133		BY608				BY255		
I_{FSM} (Amps)	30	40	50	50	300	100	200	100	400	300
T_A @ Rated I_O (°C)	75	75	T_L = 70	T_L = 70	75	95	T_L = 105	85	60	
T_C @ Rated I_O (°C)										150
T_J(Max) (°C)	175	150	175	175	175	175	175	175	175	190

* Available in metric thread, e.g. MR1120M

I_O, AVERAGE RECTIFIED FORWARD CURRENT (Amperes)												
20	24	25				30	35	35	40		70	
283-01 (DO-4) Plastic	339 Plastic Note 1	193-03 Plastic	43-05	273-01	43-02 (DO-21)		43-05*	257-01 (DO-5) Metal				
								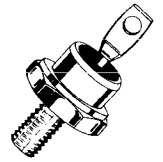				
		▲								Note 2		V_{RRM} Volts
MR2000S	BYW90-50	MR2500	MR3491	TRA2500	1N3491	1N3659	TRA1102 (30V)	1N1183	1N1183A	40HF05	70HF05	50
MR2001S	BYW90-100	MR2501	MR3492	TRA2501	1N3492	1N3660	TRA1105 (75V)	1N1184	1N1184A	40 HF10	70HF10	100
MR2002S	BYW90-200	MR2502	MR3493	TRA2502	1N3493	1N3661	TRA1110 (150V)	1N1186	1N1186A	40HF20	70HF20	200
MR2004S	BYW90-400	MR2504	MR3495	TRA2504	1N3495	1N3663	TRA1120 (300V)	1N1188	1N1188A	40HF40	70HF40	400
MR2006S	BYW90-600	MR2506		TRA2506	MR328		TRA1140	1N1190	1N1190A	40HF60	70HF60	600
MR2008S	BYW90-800	MR2508		TRA2508	MR330			1N3766	CF	40HF80	70HF80	800
MR2010S	BYW90-1000	MR2510		TRA2510	MR331			1N3768	CF	40HF100	70HF100	1000
												1300
400	400	400		400	300	400	400	400	800	500	1000	I_{FSM} (Amps)
												T_A @ Rated I_O (°C)
150	125	150	130	150	100	100	120	140	150	140	140	T_J(Max) (°C)
175	175	175	175	175	175	175	175	190	190	190	180	T_C @ Rated I_O (°C)

NOTES: 1. Meets mounting configuration of TC-220 outline.
▲ Request Data Sheet for Mounting Information
CF: Consult Factory
2. 40HF Series available with metric threads (40HFM) and/or flexible braid lead (41HF, 41HFM)
70HF Series available with metric threads (70HFM) and/or flexible braid lead (71HF, 71HFM)

* Lead length 14,7 mm

Industrial Standard Recovery Rectifiers

Second Source Program

V_{RRM} Volts	I_o AVERAGE RECTIFIED FORWARD CURRENT (AMPERES)				
	6				10
	56.02 (DO-4) Metal 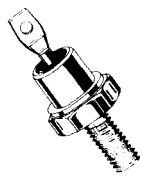				
50				G506	
100			6F10	G1006	
200		62R2	6F20	G2006	
300	BYX38-300			G3006	BYX98-300
400		64R2	6F40	G4006	
500				G5006	
600	BYX38-600	66R2	6F60	G6006	BYX98-600
800		68R2	6F80	G8006	
900	BYX38-900				BYX98-900
1000			6F100	G1106	
1200	BYX38-1200				BYX98-1200
I_{FSM} (Amps)	50	150	160	200	75
Reverse Polarity	BYX38R–	62R2R	6FR10	G506R	BYX98R–
Thread	UNF	Metric UNF	UNF	UNF Metric	UNF

Industrial Standard Recovery Rectifiers (continued)

Second Source Program

V_{RRM} Volts	I_o AVERAGE RECTIFIED FORWARD CURRENT (AMPERES)				
	12				15
	56.02 (DO-4) Metal 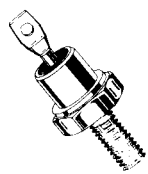				
50			G510		
100			G1010	12F10	
200	42R2		G2010	12F20	
300		BYX42-300	G3010		BYX99-300
400	44R2		G4010	12F40	
500			G5010		
600	46R2	BYX42-600	G6010	12F60	BYX99-600
800	48R2		G8010	12F80	
900		BYX42-900			BYX99-900
1000			G1110	12F100	
1200		BYX42-1200			BYX99-1200
I_{FSM} (Amps)	75	125	230	265	180
Reverse Polarity	42R2R	BYX42R–	G510R	12FR10	BYX99R–
Thread	Metric UNF	UNF	UNF Metric	UNF	UNF

Industrial Standard Recovery Rectifiers (continued)

Second Source Program

V_{RRM} Volts	I_O AVERAGE RECTIFIED FORWARD CURRENT (AMPERES)					
	20		35		40	70
	257 (DO-5) Metal					
100		RP1020		RP1040	40HF10	70HF10
200	22R2U	RP2020	32R2U	RP2D40	40HF20	70HF20
400	24R2U	RP4020	34R2U	RP404D	40HF40	70HF40
600	26R2U	RP6020	36R2U	RP6040	40HF60	70HF60
800	28R2U	RP8020	38R2U	RP8040	40HF80	70HF80
1000	30R2U	RP1120		RP1140	40HF100	70HF100–
I_{FSM} (Amps)	250	450	500	700	500	1200
Reverse Polarity	22R2RU	RP1020R	32R2RU	RP1040R	40HFR10	70HFR10
Thread	UNF	UNF	UNF	UNF	UNF	UNF

Fast Recovery Rectifiers

. . . available for designs requiring a power rectifier having maximum switching times ranging from 100 ns to 750 ns. These devices are offered in current ranges of 1.0 to 50 amperes and in voltages to 1000 volts. Higher voltages are available upon request, but a necessary trade-off against switching speeds results. Reverse polarity (anode to case) obtained by adding an "R" suffix.

Fast Recovery Rectifiers are also available in full-wave bridge and high current multicell configurations.

	I_O, AVERAGE RECTIFIED FORWARD CURRENT (Amperes)						
	1.0		3.0				5.0
	59-04 Plastic		60 Metal	267-01 Plastic			194 Plastic
V_{RRM} (Volts)							
50	1N4933	MR810	MR830	MR850	MR910		MR820
100	1N4934	MR811	MR831	MR851	MR911	BY500 −100	MR821
200	1N4935	MR812	MR832	MR852	MR912	BY500 −200	MR822
400	1N4936	MR814	MR834	MR854	MR914	BY500 −400	MR824
600	1N4937	MR816	MR836	MR856	MR916	BY500 −600	MR826
800		MR817			MR917		
1000		MR818			MR918		
I_{FSM} (Amps)	30	30	100	100	100	200	300
T_A @ Rated I_O	75	75		90*	90*	25	55*
T_C @ Rated I_O (°C)			100				
T_J(Max) (°C)	150	150	150	175	175	175	175
t_{rr} (μs)	0.2	0.75	0.2	0.2	0.75	0.3	0.2

* Must be derated for reverse power dissipation. See Data Sheet.

I_O, AVERAGE RECTIFIED FORWARD CURRENT (Amperes)						
6.0	7	12	12	12	50	
56.02 (DO-4) Metal 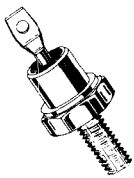					257 (DO-5) Metal 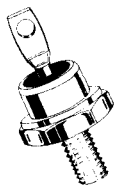	V_{RRM} (Volts)
1N3879		1N3889	BYX61-50		1N3899	50
1N3880		1N3890	BYX61-100		1N3900	100
1N3881	BYX50-200	1N3891	BYX61-200	MR2102	1N3901	200
1N3883	BYX50-400	1N3893	BYX61-400	MR2104	1N3903	400
MR1366		MR1376		MR2106	MR1386	600
				MR2108		800
						1000
150 300	200 300	200 300	200	200	250	I_{FSM} (Amps)
						T_A @ Rated I_O
100	100	100	100		100	T_C @ Rated I_O (°C)
150	150	150	150	150	150	T_J(Max) (°C)
0.2	0.1	0.2	0.1	0.1	0.2	t_{rr} (μs)

I_O, AVERAGE RECTIFIED FORWARD CURRENT (Amperes)						
24	**30**	**30**	**40**	**50**	**50**	
339 TO-220 Plastic	Case 11-03 TO-3	257 (DO-5) Metal	257 (DO-5) Metal			V_{RRM} (Volts)
BYW91-50	R710X	1N3909	MR860	MR870		50
BYW91-100	R711X	1N3910	MR861	MR871		100
BYW91-200	R712X	1N3911	MR862	MR872	MR5102	200
BYW91-400	R714X	1N3913	MR864	MR874	MR5104	400
BYW91-600		MR1396	MR866	MR876	MR5106	600
					MR5108	800
						1000
300	150	300	350	400	400	I_{FSM} (Amps)
						T_A @ Rated I_O
125		100		100	100	T_C @ Rated I_O (°C)
175	150	150	160	160	150	T_J(Max) (°C)
0.2	0.2	0.2	0.2	0.2	0.1	t_{rr} (μs)

Fast Recovery Rectifiers (continued)

... available for consumer applications requiring currents from 0.4A up to 3A in low cost axial lead packages. Their "soft recovery" characteristic is ideal for TV usages.

	I_O, AVERAGE RECTIFIED FORWARD CURRENT (Amperes)								
	0.4	**0.5**	**0.8**	**1**	**1**	**1.2**		**2**	**3**
Case	59-04							267 Plastic	
V_{RRM} (Volts)									
50									
100						BY196		BY296	BY396
200						BY197		BY297	BY397
400	BA157	BY206	BY406		BY210-4	BY198	BYX55-350	BY298	BY398
600	BA158	BY207	BY407	BY208-600	BY210-6		BYX55-600		
800				BY208-800	8Y210-8	BY199		BY299	BY399
1000	BA159			BY208-1000					
I_{FSM} (Amp)	30	30	30	30	30	40	40	100	100
T_A @ Rated I_O °C	45	45	75	75	75	50	50	90	90
T_J Max °C	150	150	150	150	175	150	125	150	175
t_{rr} (ns)	500	600	300	350	750	500	600	500	400

Ultra-Fast Recovery Epitaxial Diodes

. . . designed for use in switching power supplies, inverters and as free wheeling diodes

	I_o AVERAGE RECTIFIED FORWARD CURRENT (AMPERES)					
	1	7		8	2×8	
V_{RRM} Volts	DO41-GLASS CASE 59-03	TO-220AC			TO-220AB	
50	MUR105	BYW29-50	BYW80-50	MUR805	BYW51-50	MUR1605CT
100	MUR110	BYW29-100	BYW80-100	MUR810	BYW51-100	MUR1610CT
150	MUR115	BYW29-150	BYW80-150	MUR815	BYW51-150	MUR1615CT
I_{FSM} (AMP)	35	80	100	100	100	100
T_J MAX °C	175	150	150	175	150	175
TRR (ns)	35	35	35	35	35	35

17

V_{RRM} Volts	I_O AVERAGE RECTIFIED FORWARD CURRENT (AMPERES)			
	12	15	25	
	D04 Metric stud M5			
50	BYW30-50	BYWB1-50	BYW31-50	BYW77-50
100	BYW30-100	BYW81-100	BYW31-100	BYW77-100
150	BYW30-150	BYW81-150	BYW31-150	BYW77-150
I_{FSM} (AMP)	200	200	320	500
T_J MAX °C	150	150	150	150
TRR (ns)	35	35	50	50

V_{RRM} Volts	I_o AVERAGE RECTIFIED FORWARD CURRENT (AMPERES)			
	35	50		70
	257-01	DO5 Metal		
50	BYW92-50	BYW78-50	BYW93-50	BYW94-50
100	BYW92-100	BYW78-100	BYW93-100	BYW94-100
150	BYW92-150	BYW78-150	BYW93-150	BYW94-150
I_{FSM} (AMP)	500	1500	800	
T_J MAX °C	150	150	150	
TRR (ns)	50	60	60	

Schottky Rectifiers

Refinements in processing of SWITCHMODE Schottky Power Rectifiers are producing ruggedness and temperature performance comparable to silicon-junction rectifiers, with the high speed and low forward voltage drop characteristic of Schottky's metal/silicon junctions. Ideal for use in low voltage, high frequency power supplies and as very fast clamping diodes, these devices feature switching times less than 10 ns, and are offered in current ranges from 1 to 75 amperes, and reverse voltages to 50 Volts. Higher currents multicell, full-wave bridge and reverse polarity (anode to case) versions are available by consulting the factory.

	I_O, AVERAGE RECTIFIED FORWARD CURRENT (Amperes)													
	1.0		3.0		3.0	5.0	8.0	10	15	15		25		
	59-04 Plastic		267 Plastic		60 Metal Tin-Can		60 Metal Tin-Can	TO-220AC	TO-220AB	56-02 (DO-4) Metal				
V_{RRM} (Volts										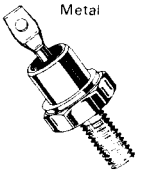				
20	1N5817	MBR120P	1N5820	MBR320P	MBR320M	1N5823	BYS0B-20	MBR1020	MBR1520CT	1N5826	MBR1520	1N5829	MBR2520	
30	1N5818	MBR130P	1N5821	MBR330P	MBR330M	1N5824	BYS0B-30			1N5827	MBR1530	1N5830	MBR2530	1N6095
35					MBR335M			MBR1035	MBR1535CT		MBR1535		MBR2535	
40	1N5819	MBR140P	1N5822	MBR340P	MBR340M	††N5825				1N5828	MBR1540	††N5831	MBR2540	1N6096
45							BYS0B-45	MBR1045	MBR1545CT					
							BYS0B-50							
I_{FSM} (Amps)	25	25	80	80	500	500	500	150	150	500	500	800	800	400
†T_C @ Rated I_O (°C)							100			85	80	85	80	70
T_A @ Rated I_O PC Board Mount (°C)														
†T_L @ Rated I_O (°C)	90	80	95	85	90	80		135						
T_J (Max) (°C)	125	125	125	125	125	125	150	150	150	125	125	125	125	125
Max V_F @ $I_{FM} = I_O$	*0.60 $T_L = 25°C$	*0.60 $T_L = 25°C$	*0.525 $T_L = 25°C$	0.55 $T_L = 25°C$	0.45 @ 5 A $T_C = 25°C$	*0.38 $T_C = 25°C$	0.50	0.57	0.57	*0.50 $T_C = 25°C$	0.55 $T_C = 25°C$	*0.48 $T_C = 25°C$	0.55 $T_C = 25°C$	0.86 @ 78.5A $T_C = 70°C$

I_O, AVERAGE RECTIFIED FORWARD CURRENT (Amperes)												
30	30	35		40		50	60	60		75		
54 (TO-3) Metal	56-02 (DO-4) Metal 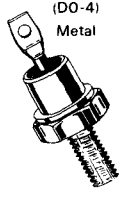			257 (DO-5) Metal Note 1			43-02 (DO-21) Metal	257 (DO-5) Metal Note 1				V_{RRM} (Volts
MBR3020CT		MBR3520	BYS35-20	1N5832	MBR4020			MBR6020PF	MBR6020	BYS60-20	BYS75-20	MBR7520	20
			BYS35-30	1N5833	MBR4030		1N6097			BYS60-30	BYS75-30	MBR7530	30
MBR3035CT		MBR3535			MBR4035			MBR6035PF	MBR6035			MBR7535	35
SD241	SD41			1N5834	MBR4040		1N6098		SD51			MBR7540	40
MBR3045CT		†MBR3545	BYS35-45					MBR6045PF	†MBR6045	BYS60-45	BYS75-45	†MBR7545	45
			BYS35-50							BYS60-50	BYS75-50		50
400		600	600	800	800		800	800	800	800	1000	1000	I_{FSM} (Amps)
95		90	90	75	70		70	90	90	90	90	90	†T_C @ Rated I_O (°C)
													T_A @ Rated I_O PC Board Mount (°C)
													†T_L @ Rated I_O (°C)
150	150	150	150	125	125		125	150	150	150	150	150	T_J (Max) (°C)
0.95 @ 60A T_C = 125°C	0.55 20A T_c=125°C	0.70@78.5A T_C = 125°C	0.77@70A T_C = 100°C	*0.59 T_C = 25°C	0.63 T_C = 25°C		0.86@157A T_C = 70°C	0.80 157A T_c = 125°C	0.80@157A T_C = 125°C	0.81@120A T_C = 100°C	0.78@150A T_C = 100°C	0.90@220A T_C = 125°C	Max V_F @ I_{FM} = I_O

Capable of 150°C junction temperature operation.

NOTES: 1. Braided lead top terminal configuration available; consult your Sales Representative.

†Motorola TX versions available, consult factory.

BYS35-20 CECC Registered Device

BYS60-20 CECC Registered Device

BYS75-20 CECC Registered Device

TRANSIENTS IN THE AUTOMOTIVE ELECTRICAL SYSTEM

INTRODUCTION

The introduction of electronics into the automobile has brought with it the interesting sidelight of characterizing the automotive electrical system for transients.

Since most electro-mechanical systems exhibit a wear-out phenomenon as electrical stresses are increased, there has been no need to separately define transients from the normal load conditions. Any transient condition was simply accounted for by increasing contact ratings, etc. The introduction of semiconductors changes the picture since they exhibit a different sensitivity to transients. Semiconductors tend to have a black and white failure characteristic when exposed to transients in that no damage is caused below a certain level and total failure results above a certain level. Unfortunately these two levels are separate and the problem is further complicated by the fact that the energy tolerance of semiconductors is normally subject to a production distribution. This leaves solid state systems open to problems which are discovered only after many units are in the field.

SUMMARY OF TRANSIENTS

Transients in the automotive electrical system have widely varying energy levels occurring over widely varying times, but most become insignificant compared to the worst transient known as "Load Dump". Load dump happens when the battery becomes disconnected while the alternator is supplying charging current, or the disconnection of some other load with no battery present. Load dump transients generally are of 200 to 500 milliseconds duration, having an exponential decay from a worst case peak voltage of 80-120 volts. A clamped load dump, it should be noted, will be of considerably shorter duration.

Although the possibility of the battery becoming disconnected while the engine is running may seem remote, it is not reasonable this occurrence should result in the total failure of the electrical system of a car.

The following table lists some of the transients the automotive electronic designer must consider and should cause him to provide some level of protection.

Power Source	Available Transients
Battery Line	1. ±200 Volts for μseconds 2. +Load Dump
Ignition Line and Accessory Line	1. -300 Volts for milliseconds 2. ±200 Volts for μseconds 3. +Load Dump Note: All transients are exponential decay.

The voltages and times shown are reasonable values from many on-car measurements. Since the nonload-dump transients are of low energy, but high voltage, it is recommended they be clamped rather than blocked. It is imperative that source impedances also be known to allow proper selection of clamp devices.

1.0 Ampere High Voltage Rectifiers

Case	59-04
V_{RRM} Volts	
1000 V	MR1-1000
1200 V	MR1-1200
1400 V	MR1-1400
1600 V	MR1-1600 BYX10
I_{FSM} (A)	30
T_A @ Rated I_O °C	75*
T_J Max °C	175
t_{rr} μs	25

* Must be derated for reverse power dissipation.

Automotive Transient Suppressor

Case	194	
V_{RRM} (Volts)		
23	MR2525L	MR2520L
23		
I_O (Amp)	6	6
BV (Volts)	24-32	24-32
I_{RSM} (Amp)	62	40
I_{FSM} (Amp)	600	400
T_C @ Rated I_O (°C)	150	150
T_{JRRM} (°C)	175	175

Rectifier Bridges

Motorola SUPERBRIDGES offer cost effectiveness and reliability in single phase applications. Chip/leadframe techniques are used for lower-current types, while the higher current assemblies combine pretested 'button' rectifier cells for low assembly cost and high yields. Performance of four individual diodes is achieved at the cost of only two, with reliability of the whole assembly comparable to that of a single unit. The higher current assemblies feature versatile slip-on/solder/wire wrap terminals.

Fast Recovery versions having reverse recovery times of less than 200 nanoseconds are available by adding a 'FR' suffix to the part number.
Schottky Bridge inquiries are invited by the factory.

	I_O, DC OUTPUT CURRENT (Amperes)							
	1.5	2.0	2.0	4.0/8.0*	15	25	25	35
	109-03	312-02	312-02	117A-02 Note 1	309-01	309-01	309A-03	309-01
V_{RRM} Volts					•	•	•	•
50	MDA920A2		MDA200	MDA970A1	BYW20	BYV25-50	BYT25-50 MDA2500	BYW60
100	MDA920A3	MDA220	MDA201	MDA970A2	BYW21	BYV25-100	BYT25-100 MDA2501	BYW61
200	MDA920A4		MDA202	MDA970A3	BYW22	BYV25-200	BYT25-200 MDA2502	BYW62
400	MDA920A6		MDA204	MDA970A5	BYW24	BYV25-400	BYT25-400 MDA2504	BYW64
600	MDA920A7		MDA206	MDA970A6	BYW26	BYV25-600	BYT25-600 MDA2506	BYW66
800	MDA920A8		MDA208	CF	BYW28	BYV25-800	BYT25-800	BYW68
1000	MDA920A9		MDA210	CF	BYW79	BYV25-1000	BYT25-1000	BYW89
I_{FSM} (Amp)	45	60	60	100	400	400	400	400
T_A Rated I_O (°C)	50	55	55	•				
T_C Rated I_O (°C)				•	55	55	55	55
T_J (Max) (°C)	175	150	175	150	175	175	175	175

* 4.0 A T_A=25°C
8.0 A T_C=55°C

Note: 1. The MDA970A series replaces the MDA970 in the new Case 117A-02, which has minor changes over the old Case 117.
SUPERBRIDGES is a trademark of Motorola Inc.

* Square size 35 mm

Zeners

In every language under the sun, the name most commonly associated with solid-state regulator and reference devices is Motorola. A pioneer in Zener diode development, Motorola has consistently led the industry in parameter improvements, packaging proliferation and specifications innovation. Today, Motorola serves the industry with an incomparable line of zener and avalanche regulator diodes, temperature compensated reference devices, and a host of transient suppressor devices designed to provide the exact degree of regulation and/or protection required, at the point in the circuit or system where it can be used most conveniently at the lowest cost.

Table of Contents

	Page
Zener and Avalanche Regulator Diodes— 1N Types	18- 2
Zener and Avalanche Regulator Diodes— European Types	18- 4
Zener Reference Devices (Temperature Compensated)	18- 6
Precision Reference Diodes	18- 6
Field-Effect Current Regulator Diodes	18- 7
Low Voltage Regulators	18- 7
Transient Suppressors	18- 8
Selected Zener Diode Options	18-10

Zener and Avalanche Regulator Diodes—1N Types

Motorola's standard Zeners and Avalanche Regulator diodes comprise the largest inventoried line in the industry. Continuous development of improved manufacturing techniques have resulted in computerized diffusion and test, as well as critical process controls learned from surface-sensitive MOS fabrication. Resultant high yields lower factory costs. Check the following features for application to your specific requirements:

- Wide selection of package materials and styles:
  Plastic (Surmetic) for low cost, mechanical ruggedness
  Glass for highest reliability, lowest cost
  Metal for highest power
- Power ratings from 0.25 to 50 Watts
- Breakdown voltages from 1.8 to 200 V in approximately 10% steps
- Available tolerances from 10% (low cost) to as tight as 1% (critical applications) with off-the-shelf delivery
- Special selection of electrical characteristics available at low cost due to high-volume lines (check your Motorola sales representative for special quotations)
- JAN/JANTX(V) availability (designated by tint)
- Special glass now used in DO-35 type packages is compatible with low temperature alloy processes, yielding sharper breakdown and low leakage.

NOTES

1. The Zener Voltage is measured at approximately 1/4 the rated power, with the following exceptions: the 1N4678–4717 is measured with I_{ZT} = 50 μAdc; the 1N4614–1N4099 is measured with I_{ZT} = 250 μAdc; the 1N4370–1N746 and the 1N5221–5242 are measured with I_{ZT} = 20 mAdc; the 1N5985A–6012A is measured with I_{ZT} = 5 mA; 1N6013A–6023A is measured with I_{ZT} = 2 mA; 1N6024–6025 is measured with I_{ZT} = 1 mA.
2. Contact your Motorola representative for information on intermediate voltages and tighter tolerances.

Tolerances

3. No suffix = ±5%
4. A suffix = ±10% — with guaranteed limits on V_Z, V_F, and I_R only
   B suffix = ±5%
   C suffix = ±2%
   D suffix = ±1%
5. 1N4370–1N746 series: No suffix = ±10%
   A suffix = ±5%
   1N957 series: A suffix = ±10%
   B suffix = ±5%

Military parts in 1N4370–746/962 series and standard 1N987–1N992 supplied in DO-7. Military parts in 1N4370–746/962 are also available in the cost effective OO-204AH (OO-35) package as the -1 version. This version can be ordered by inserting a 1 between the part number and the JAN, JTX or JTXV suffix, ie 1N746A1JAN. MIL-STD 19500/117 and 127 state the -1 version is a direct substitute for the non -1 version. The -1 versions appear on MIL-STD 701 as the preferred parts for new designs. Military parts in 1N4614, 1N4099 and 1N5518A series supplied in DO-7.

Nominal Zener Voltage	250 mW Low Level Cathode = Polarity Mark	250 mW Low Noise Cathode = Polarity Mark	400 mW Low Noise Low Leakage Cathode = Polarity Mark	500 mW Cathode = Polarity Mark		
(Note 1)	(Notes 2, 3)	(Notes 2, 3, 5)	(Notes 2, 4, 5)	(Notes 2, 5)	(Notes 2, 6)	(Notes 1, 2, 13)
	Case 299-02			Glass DO-204AH (DO-35)		
1.8	1N4678	1N4614				
2.0	1N4679	1N4615				
2.2	1N4680	1N4616				
2.4	1N4681	1N4617		1N4370	1N5221	1N5985A
2.7	1N4682	1N4618		1N4371	1N5223	1N5986A
3.0	1N4683	1N4619		1N4372	1N5225	1N5987A
3.3	1N4684	1N4620	1N5518A	1N746	1N5226	1N5988A
3.6	1N4685	1N4621	1N5519A	1N747	1N5227	1N5989A
3.9	1N4686	1N4622	1N5520A	1N748	1N5228	1N5990A
4.3	1N4687	1N4623	1N5521A	1N749	1N5229	1N5991A
4.7	1N4688	1N4624	1N5522A	1N750	1N5230	1N5992A
5.1	1N4689	1N4625	1N5523A	1N751	1N5231	1N5993A
5.6	1N4690	1N4626	1N5524A	1N752	1N5232	1N5994A
6.2	1N4691	1N4627	1N5525A	1N753	1N5234	1N5995A
6.8	1N4692	1N4099	1N5526A	1N754 1N957A	1N5235	1N5996A
7.5	1N4693	1N4100	1N5527A	1N755 1N958A	1N5236	1N5997A
8.2	1N4694	1N4101	1N5528A	1N756 1N959A	1N5237	1N5998A
8.7	1N4695	1N4102			1N5238	
9.1	1N4696	1N4103	1N5529A	1N757 1N960A	1N5239	1N5999A
10	1N4697	1N4104	1N5530A	1N758 1N961A	1N5240	1N6000A
11	1N4698	1N4105	1N5531A	1N962A	1N5241	1N6001A
12	1N4699	1N4106	1N5532A	1N759 1N963A	1N5242	1N6002A
13	1N4700	1N4107	1N5533A	1N964A	1N5243	1N6003A
14	1N4701	1N4108	1N5534A		1N5244	
15	1N4702	1N4109	1N5535A	1N965A	1N5245	1N6004A
16	1N4703	1N4110	1N5536A	1N966A	1N5246	1N6005A
17	1N4704	1N4111	1N5537A		1N5247	
18	1N4705	1N4112	1N5538A	1N967A	1N5248	1N6006A
19	1N4706	1N4113	1N5539A		1N5249	
20	1N4707	1N4114	1N5540A	1N968A	1N5250	1N6007A
22	1N4708	1N4115	1N5541A	1N969A	1N5251	1N6008A
24	1N4709	1N4116	1N5542A	1N970A	1N5252	1N6009A
25	1N4710	1N4117	1N5543A		1N5253	
27	1N4711	1N4118		1N971A	1N5254	1N6010A
28	1N4712	1N4119	1N5544A		1N5255	
30	1N4713	1N4120	1N5545A	1N972A	1N5256	1N6011A
33	1N4714	1N4121	1N5546A	1N973A	1N5257	1N6012A
36	1N4715	1N4122		1N974A	1N5258	1N6013A
39	1N4716	1N4123		1N975A	1N5259	1N6014A
43	1N4717	1N4124		1N976A	1N5260	1N6015A
47		1N4125		1N977A	1N5261	1N6016A
51		1N4126		1N978A	1N5262	1N6017A
56		1N4127		1N979A	1N5263	1N6018A
60		1N4128			1N5264	
62		1N4129		1N980A	1N5265	1N6019A
68		1N4130		1N981A	1N5266	1N6020A
75		1N4131		1N982A	1N5267	1N6021A
82		1N4132		1N983A	1N5268	1N6022A
87		1N4133			1N5269	
91		1N4134		1N984A	1N5270	1N6023A
100		1N4135		1N985A	1N5271	1N6024A
110				1N986A	1N5272	1N6025A
120				†1N987A	1N5273#	
130				†1N988A	1N5274#	
140					1N5275#	
150				†1N989A	1N5276#	
160				†1N990A	1N5277#	
170					1N5278#	
180				†1N991A	1N5279#	
200				†1N992A	1N5281#	

JAN/JANTX(V) available, ±5% only.
†1N987-1N992 supplied in OO-7 glass package.
#1N5273-1N5281 supplied in Surmetic DO-7 plastic package.

ZENER AND AVALANCHE REGULATOR DIODES (continued)

Nominal Zener Voltage	1 WATT Cathode = Polarity Mark	1 WATT Cathode to Case	1.5 WATT Cathode = Polarity Mark	1.5 WATT Cathode to Case	5 WATT Cathode = Polarity Mark	10 WATT Cathode to Case = 1N3993 Series Anode to Case = 1N2970 Series	50 WATT Anode to Case	50 WATT Anode to Case
(Note 1)	(Notes 2, 7)	(Notes 2, 8)	(Notes 2, 9)	(Notes 2, 10)	(Notes 2, 11)	(Notes 2, 10, 12)	(Notes 2, 10, 12)	(Notes 2, 10, 12)
	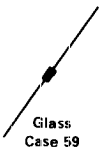 Glass Case 59 (DO-41)	Metal Case 52 (OO-13)	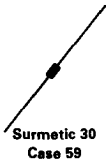 Surmetic 30 Case 59 (DO-41)	Metal Case 55	Surmetic 40 Case 17	Metal Case 56 (DO-4)	Metal Case 54 (TO-3)	Metal Case 58 (DO-5 Type)
3.3	1N4728	1N3821	1N5913A		1N5333A			
3.6	1N4729	1N3822	1N5914A		1N5334A			
3.9	1N4730	1N3823	1N5915A		1N5335A	1N3993&R	1N4557A&RA	1N4549A&RA
4.3	1N4731	1N3824	1N5916A		1N5336A	1N3994&R	1N4558A&RA	1N4550A&RA
4.7	1N4732	1N3825	1N5917A		1N5337A	1N3995&R	1N4559A&RA	1N4551A&RA
5.1	1N4733	1N3826	1N5918A		1N5338A	1N3996&R	1N4560A&RA	1N4552A&RA
5.6	1N4734	1N3827	1N5919A		1N5339A	1N3997&R	1N4561A&RA	1N4553A&RA
6.2	1N4735	1N3828	1N5920A		1N5341A	1N3998&R	1N4562A&RA	1N4554A&RA
6.8	1N4736	1N3829	1N5921A	1N3785A	1N5342A	1N3999&R	1N4563A&RA	1N4555A&RA
		1N3016A				1N2970A&RA	1N2804A&RA	1N3305A&RA
7.5	1N4737	1N3830	1N5922A	1N3786A	1N5343A	1N4000&R	1N4564A&RA	1N4556A&RA
		1N3017A				1N2971A&RA	1N2805A&RA	1N3306A&RA
8.2	1N4738	1N3018A	1N5923A	1N3787A	1N5344A	1N2972A&RA	1N2806A&RA	1N3307A&RA
8.7					1N5345A			
9.1	1N4739	1N3019A	1N5924A	1N3788A	1N5346A	1N2973A&RA	1N2807A&RA	1N3308A&RA
10	1N4740	1N3020A	1N5925A	1N3789A	1N5347A	1N2974A&RA	1N2808A&RA	1N3309A&RA
11	1N4741	1N3021A	1N5926A	1N3790A	1N5348A	1N2975A&RA	1N2809A&RA	1N3310A&RA
12	1N4742	1N3022A	1N5927A	1N3791A	1N5349A	1N2976A&RA	1N2810A&RA	1N3311A&RA
13	1N4743	1N3023A	1N5928A	1N3792A	1N5350A	1N2977A&RA	1N2811A&RA	1N3312A&RA
14					1N5351A	1N2878A&RA	1N2812A&RA	1N3313A&RA
15	1N4744	1N3024A	1N5929A	1N3793A	1N5352A	1N2979A&RA	1N2813A&RA	1N3314A&RA
16	1N4745	1N3025A	1N5930A	1N3794A	1N5353A	1N2980A&RA	1N2814A&RA	1N3315A&RA
17					1N5354A		1N2815A&RA	1N3316A&RA
18	1N4746	1N3026A	1N5931A	1N3795A	1N5355A	1N2982A&RA	1N2816A&RA	1N3317A&RA
19					1N5356A	1N2983A&RA	1N2817A&RA	1N3318A&RA
20	1N4747	1N3027A	1N5932A	1N3796A	1N5357A	1N2984A&RA	1N2818A&RA	1N3319A&RA
22	1N4748	1N3028A	1N5933A	1N3797A	1N5358A	1N2985A&RA	1N2819A&RA	1N3320A&RA
24	1N4749	1N3029A	1N5934A	1N3798A	1N5359A	1N2986A&RA	1N2820A&RA	1N3321A&RA
25					1N5360A		1N2821A&RA	1N3322A&RA
27	1N4750	1N3030A	1N5935A	1N3799A	1N5361A	1N2988A&RA	1N2822A&RA	1N3323A&RA
28					1N5362A			
30	1N4751	1N3031A	1N5936A	1N3800A	1N5363A	1N2989A&RA	1N2823A&RA	1N3324A&RA
33	1N4752	1N3032A	1N5937A	1N3801A	1N5364A	1N2990A&RA	1N2824A&RA	1N3325A&RA
36	1N4753	1N3033A	1N5938A	1N3802A	1N5365A	1N2991A&RA	1N2825A&RA	1N3326A&RA
39	1N4754	1N3034A	1N5939A	1N3803A	1N5366A	1N2992A&RA	1N2826A&RA	1N3327A&RA
43	1N4755	1N3035A	1N5940A	1N3804A	1N5367A	1N2993A&RA	1N2827A&RA	1N3328A&RA
47	1N4756	1N3036A	1N5941A	1N3805A	1N5368A	1N2996A&RA	1N2829A&RA	1N3330A&RA
51	1N4757	1N3037A	1N5942A	1N3806A	1N5369A	1N2997A&RA	1N2831A&RA	1N3332A&RA
56	1N4758	1N3038A	1N5943A	1N3807A	1N5370A	1N2999A&RA	1N2832A&RA	1N3334A&RA
60					1N5371A			
62	1N4759	1N3038A	1N5944A	1N3808A	1N5372A	1N3000A&RA	1N2833A&RA	1N3335A&RA
68	1N4760	1N3040A	1N5945A	1N3809A	1N5373A	1N3001A&RA	1N2834A&RA	1N3336A&RA
75	1N4761	1N3041A	1N5946A	1N3810A	1N5374A	1N3002A&RA	1N2835A&RA	1N3337A&RA
82	1N4762	1N3042A	1N5947A	1N3811A	1N5375A	1N3003A&RA	1N2836A&RA	1N3338A&RA
87					1N5376A			
91	1N4763	1N3043A	1N5948A	1N3812A	1N5377A	1N3004A&RA	1N2837A&RA	1N3339A&RA
100	1N4764	1N3044A	1N5949A	1N3813A	1N5378A	1N3005A&RA	1N2838A&RA	1N3340A&RA
110		1N3045A	1N5950A	1N3814A	1N5379A	1N3007A&RA	1N2840A&RA	1N3342A&RA
120		1N3046A	1N5951A	1N3815A	1N5380A	1N3008A&RA	1N2841A&RA	1N3343A&RA
130		1N3047A	1N5952A	1N3816A	1N5381A	1N3009A&RA	1N2842A&RA	1N3344A&RA
150		1N3048A	1N5953A	1N3817A	1N5383A	1N3011A&RA	1N2843A&RA	1N3346A&RA
160		1N3049A	1N5954A	1N3818A	1N5384A	1N3012A&RA	1N2844A&RA	1N3347A&RA
170					1N5385A			
180		1N3050A	1N5955A	1N3819A	1N5386A	1N3014A&RA	1N2845A&RA	1N3349A&RA
200		1N3051A	1N5956A	1N3820A	1N5388A	1N3015A&RA	1N2846A&RA	1N3350A&RA

JAN/JANTX(V) available, ±5% only.

NOTES — Tolerances (continued)

6. No suffix = ±10% with guaranteed limits on V_Z, V_F and I_R only.
   A suffix = ±10%
   B suffix = ±5%

7. No suffix = ±10%
   A suffix = ±5%

8. 1N3821 series: No suffix = ±10%
   A suffix = ±5%
   1N3016 series: A suffix = ±10%
   B suffix = ±5%

9. A suffix = ±10%
   B suffix = ±5%
   C suffix = ±2%
   D suffix = ±1%

10. A suffix = ±10%
    B suffix = ±5%
    Exception:
    1N3993–1N4000: No suffix = ±10%
    A suffix = ±5%

11. A suffix = ±10%
    B suffix = ±5%

12. RA and RB = Reverse Polarity Types Available

13. A suffix = ±10%
    B suffix = ±5%

Nominal Zener Voltage	500 MW Cathode = Polarity Mark				1.3 Watt Cathode = Polarity Mark			2.5 Watt Cathode = Pol. Mark	500 MW Cathode = Pol. Mark
	Notes 14, 18	Notes 15, 18	Notes 15, 18	Notes 16, 18	Notes 15, 18	Notes 16, 18	Notes 16, 18	Notes 17, 18	Notes 15, 18
	Case 299 – 02		Glass DO-204AH (DO35)		Glass Case 59 (DO41)		SURMETIC 30 Case 59 (DO41)		
2.4	BZX55C2V4	BZX79C2V4							
2.7	BZX55C2V7	BZX79C2V7	BZX83C2V7	MZPD 2.7					BZY88C2V7
3.0	BZX55C3V0	BZX79C3V0	BZX83C3V0	MZPD 3.0					BZY88C3V0
3.3	BZX55C3V3	BZX79C3V3	BZX83C3V3	MZPD 3.3	BZX85C3V3			MZP 4728	BZY88C3V3
3.6	BZX55C3V6	BZX79C3V6	BZX83C3V6	MZPD 3.6	BZX85C3V6			MZP 4729	BZY88C3V6
3.9	BZX55C3V9	BZX79C3V9	BZX83C3V9	MZPD 3.9	BZX85C3V9	MZPY 3.9	MZD 3.9	MZP 4730	BZY88C3V9
4.3	BZX55C4V3	BZX79C4V3	BZX83C4V3	MZPD 4.3	BZX85C4V3	MZPY 4.3	MZD 4.3	MZP 4731	BZY88C4V3
4.7	BZX55C4V7	BZX79C4V7	BZX83C4V7	MZPD 4.7	BZX85C4V7	MZPY 4.7	MZD 4.7	MZP 4732	BZY88C4V7
5.1	BZX55C5V1	BZX79C5V1	BZX83C5V1	MZPD 5.1	BZX85C5V1	MZPY 5.1	MZD 5.1	MZP 4733	BZY88C5V1
5.6	BZX55C5V6	BZX79C5V6	BZX83C5V6	MZPD 5.6	BZX85C5V6	MZPY 5.6	MZD 5.6	MZP 4734	BZY88C5V6
6.2	BZX55C6V2	BZX79C6V2	BZX83C6V2	MZPD 6.2	BZX85C6V2	MZPY 6.2	MZD 6.2	MZP 4735	BZY88C6V2
6.8	BZX55C6V8	BZX79C6V8	BZX83C6V8	MZPD 6.8	BZX85C6V8	MZPY 6.8	MZD 6.8	MZP 4736	BZY88C6V8
7.5	BZX55C7V5	BZX79C7V5	BZX83C7V5	MZPD 7.5	BZX85C7V5	MZPY 7.5	MZD 7.5	MZP 4737	BZY88C7V5
8.2	BZX55C8V2	BZX79C8V2	BZX83C8V2	MZPD 8.2	BZX85C8V2	MZPY 8.2	MZD 8.2	MZP 4738	BZY88C8V2
9.1	BZX55C9V1	BZX79C9V1	BZX83C9V1	MZPD 9.1	BZX85C9V1	MZPY 9.1	MZD 9.1	MZP 4739	BZY88C9V1
10	BZX55C10	BZX79C10	BZX83C10	MZPD 10	BZX85C10	MZPY 10	MZD 10	MZP 4740	BZY88C10
11	BZX55C11	BZX79C11	BZX85C11	MZPD 11	BZX85C11	MZPY 11	MZD 11	MZP 4741	BZY88C11
12	BZX55C12	BZX79C12	BZX83C12	MZPD 12	BZX85C12	MZPY 12	MZD 12	MZP 4742	BZY88C12
13	BZX55C13	BZX79C13	BZX83C13	MZPD 13	BZX85C13	MZPY 13	MZD 13	MZP 4743	BZY88C13
15	BZX55C15	BZX79C15	BZX83C15	MZPD 15	BZX85C15	MZPY 15	MZD 15	MZP 4744	BZY88C15
16	BZX55C16	BZX79C16	BZX83C16	MZPD 16	BZX85C16	MZPY 16	MZD 16	MZP 4745	BZY88C16
18	BZX55C18	BZX79C18	BZX83C18	MZPD 18	BZX85C18	MZPY 18	MZD 18	MZP 4746	BZY88C18
20	BZX55C20	BZX79C20	BZX83C20	MZPD 20	BZX85C20	MZPY 20	MZD 20	MZP 4747	BZY88C20
22	BZX55C22	BZX79C22	BZX83C22	MZPD 22	BZX85C22	MZPY 22	MZD 22	MZP 4748	BZY88C22
24	BZX55C24	BZX79C24	BZX83C24	MZPD 24	BZX85C24	MZPY 24	MZD 24	MZP 4749	BZY88C24
27	BZX55C27	BZX79C27	BZX83C27	MZPD 27	BZX85C27	MZPY 27	MZD 27	MZP 4750	BZY88C27
30	BZX55C30	BZX79C30	BZX83C30	MZPD 30	BZX85C30	MZPY 30	MZD 30	MZP 4751	BZY88C30
33	BZX55C33	BZX79C33	BZX83C33	MZPD 33	BZX85C33	MZPY 33	MZD 33	MZP 4752	BZY88C33
36	BZX55C36	BZX79C36			BZX85C36	MZPY 36	MZD 36	MZP 4753	
39	BZX55C39	BZX79C39			BZX85C39	MZPY 39	MZD 39	MZP 4754	

Zener and Avalanche Regulator Diodes – European Types

Nominal Zener Voltage	400 MW Cathode = Polarity Mark				1.3 Watt Cathode = Polarity Mark			2.5 Watt Cathode = Pol. Mark	500 MW Cathode = Pol. Mark
	Notes 14, 18	Notes 15, 18	Notes 15, 18	Notes 16, 18	Notes 15, 18	Notes 16, 18	Notes 16, 18	Notes 17, 18	Notes 15, 18
	Case 299 – 02			Glass DO-2044H (DO35)	Glass Case 59 (DO41)		SURMETIC 30 Case 59 (DO41)		
43	BZX55C43	BZX79C43			BZX85C43	MZPY 43	MZD 43	MZP 4755	
47	BZX55C47	BZX79C47			BZX85C47	MZPY 47	MZD 47	MZP 4756	
51	BZX55C51	BZX79C51			BZX85C51	MZPY 51	MZD 51	MZP 4757	
56	BZX55C56	BZX79C56			BZX85C56	MZPY 56	MZD 56	MZP 4758	
62	BZX55C62	BZX79C62			BZX85C62	MZPY 62	MZD 62	MZP 4759	
68	BZX55C68	BZX79C68			BZX85C68	MZPY 68	MZD 68	MZP 4750	
75	BZX55C75	BZX79C75			BZX85C75	MZPY 75	MZD 75	MZP 4761	
82		BZX79C82			BZX85C82	MZPY 82	MZD 82	MZP 4762	
91		BZX79C91			BZX85C91	MZPY 91	MZD 91	MZP 4763	
100		BZX79C100			BZX85C100	MZPY100	MZP 100	MZP 4764	
110							MZD110	1M110ZS5	
120							MZD120	1M120ZS5	
130							MZD130	1M130ZS5	
140									
150							MZD150	1M150ZS5	
160							MZD160	1M160ZS5	
170									
180							MZD180	1M180ZS5	
190									
200							MZD200	1M200ZS5	

Notes:
14. C Suffix = ± 5% Tolerance
15. C indicates ± 5% Tolerance
    B in place of C = ± 2% Tolerance
    A in place of C = ± 1% Tolerance
16. No Suffix = ± 5% Tolerance
    C Suffix = ± 2% Tolerance
17. No Suffix = ± 10% Tolerance
    A Suffix = ± 5 % Tolerance
18. Tighter tolerances or special selections are available upon request.

Zener Reference Devices

For applications where output voltage must remain within narrow limits during changes in input voltage, load resistance and temperature. Motorola guarantees all References Devices to fall within the specified maximum voltage variations, ΔV_Z, at the specifically indicated test temperatures and test current (JEDEC Standard #5). Temperature Coefficient is also specified but should be considered as a reference only — not a maximum rating.

Devices in this table are hermetically sealed structures. Includes JAN, JANTX and JTXV devices. These temperature compensated Zener Reference Diodes have low dynamic impedance and silicon-oxide and nitride passivated junctions for long-term stability.

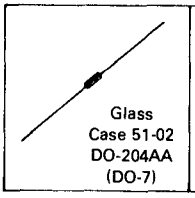

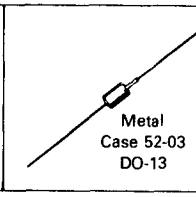

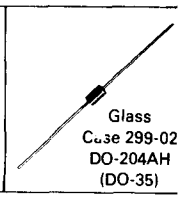

V_Z Volts	Test Current mAdc	Test Temp Points	AVERAGE TEMPERATURE COEFFICIENT OVER THE OPERATING RANGE										Case
			0.01 %/°C		0.005 %/°C		0.002 %/°C		0.001 %/°C		0.0005 %/°C		
			Device Type	ΔV_Z Max Volts	Device Type	ΔV_Z Max Volts	Device Type	ΔV_Z Max Volts	Device Type	ΔV_Z Max Volts	Device Type	ΔV_Z Max Volts	
6.2⚠	7.5	A	1N821	0.096	1N823	0.048	1N825	0.019	1N827	0.009	1N829	0.005	299-02
6.2⚠	7.5	A	1N821A	0.096	1N823A	0.048	1N825A	0.019	1N827A	0.009	1N829A	0.005	
6.4	0.5	B	1N4565	0.018	1N4566	0.024	1N4567	0.010	1N4568	0.005	1N4569	0.002	DO-204AH (DO-35)
	0.5	A	1N4565A	0.099	1N4566A	0.050	1N4567A	0.020	1N4568A	0.010	1N4569A	0.005	
	1.0	B	1N4570	0.048	1N4571	0.024	1N4572	0.010	1N4573	0.005	1N4574	0.002	
	1.0	A	1N4570A	0.099	1N4571A	0.050	1N4572A	0.020	1N4573A	0.010	1N4574A	0.005	
	2.0	B	1N4575	0.048	1N4576	0.024	1N4577	0.010	1N4578	0.005	1N4579	0.002	
	2.0	A	1N4575A	0.099	1N4576A	0.025	1N4577A	0.020	1N4578A	0.010	1N4579A	0.005	
	4.0	B	1N4580	0.048	1N4581	0.024	1N4582	0.010	1N4583	0.005	1N4584	0.002	
	4.0	A	1N4580A	0.099	1N4581A	0.050	1N4582A	0.020	1N4583A	0.010	1N4584A	0.005	
8.4	10	A	1N3154	0.130	1N3155	0.065	1N3156	0.026	1N3157	0.013			51-02 DO-204AA (DO-7)
	10	C	1N3154A	0.072	1N3155A	0.085	1N3156A	0.034	1N3157A	0.017			
8.5	0.5	B	1N4775	0.064	1N4776	0.032	1N4777	0.013	1N4778	0.006	1N4779	0.003	
	0.5	A	1N4775A	0.132	1N4776A	0.066	1N4777A	0.026	1N4778A	0.013	1N4779A	0.007	
	1.0	B	1N4780	0.064	1N4781	0.032	1N4782	0.013	1N4783	0.006	1N4784	0.003	
	1.0	A	1N4780A	0.132	1N4781A	0.066	1N4782A	0.026	1N4783A	0.013	1N4784A	0.007	
9.0	7.5	B	1N935	0.067	1N936	0.033	1N937	0.013	1N938	0.006	1N939	0.003	
	7.5	A	1N935A	0.139	1N936A	0.069	1N937A	0.027	1N938A	0.013	1N939A	0.007	
	7.5	C	1N935B	0.184	1N936B	0.092	1N937B	0.037	1N938B	0.018	1N939B	0.009	
9.4 ±0.4 (Suffix "A" ±0.2 V)	10	D			1N2163,A	0.033			1N2166,A	0.007	1N2169,A	0.004	52-03 (DO-13)
		E			1N2164,A	0.086			1N2167,A	0.017	1N2170,A	0.009	
		F			1N2165,A	0.110			1N2168,A	0.023	1N2171,A	0.012	
11.7	7.5	B	1N941	0.088	1N942	0.044	1N943	0.018	1N944	0.009	1N945	0.004	51-02 DO-204AA (DO-7)
	7.5	A	1N941A	0.081	1N942A	0.090	1N943A	0.036	1N944A	0.018	1N945A	0.009	
	7.5	C	1N941B	0.239	1N942B	0.120	1N943B	0.047	1N944B	0.024	1N945B	0.012	

Test Temperature Points	
A	-55, 0, +25, +75, +100
B	0, +25, +75
C	-55, 0, +25, +75, +100, +150
D	0, +25, +70
E	-55, 0, +25, +75, +125
F	-55, 0, +75, +125, +185
G	+25, +75, +100

⚠ Non suffix - Z_{ZT} = 15, "A" Suffix - Z_{ZT} = 10

JAN/JANTX(V) available, ±5% only, Military part in the 1N821 and 1N4565 series and supplied in the DO-7 package.

Precision Reference Diodes

Designed, manufactured and tested for ultra-high stability of voltage with time and temperature change. Use of special measurement equipment and voltage standards provide calibration directly traceable to the National Bureau of Standards.

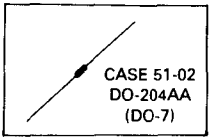

Reference Voltage Volts	Test Current mA	Temperature Stability		CERTIFIED VOLTAGE TIME STABILITY OVER 1000 HOURS OF OPERATION (Parts/Million Change)							
				<5 PPM/1000 HR		<10 PPM/1000 HR		<20 PPM/1000 HR		<40 PPM/1000 HR	
		ΔV_Z (mV)	OP Temp Range °C	Device Type	Change μV Max	Device Type	Change μV Max	Device Type	Change μV Max	Device Type	Change μV Max
6.2 ± 5%	7.5	2.5	25,75,100	MZ605	30	MZ610	60	MZ620	120	MZ640	240

Field Effect Current Regulator Diodes

High impedance diodes whose "constant current source" characteristic complements the "constant voltage" of the zener line. Currents are available from 0.22 to 4.7 mA, with usable voltage range from a minimum limit of 1.0 to 2.5 V, up to a voltage compliance of 100 V, for the 1N5283 series, or 70 V, for the MCL1300 series.

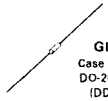

Glass
Case 51-02
DO-204AA
(DD-7)

Reg. Current Ip @V_T = 25 V mA Nom	Device Type	Knee Imp Z_K @V_K = 6.0 V MΩ Min	Limiting Voltage @I_L = 0.8 Ip Volts Max
0.22	1N5283	2.75	1.00
0.24	1N5284	2.35	1.00
0.27	1N5285	1.95	1.00
0.30	1N5286	1.60	1.00
0.33	1N5287	1.35	1.00
0.39	1N5288	1.00	1.05
0.43	1N5289	0.870	1.05
0.47	1N5290	0.750	1.05
0.56	1N5291	0.560	1.10
0.62	1N5292	0.470	1.13
0.68	1N5293	0.400	1.15
0.75	1N5294	0.335	1.20
0.82	1N5295	0.290	1.25
0.91	1N5296	0.240	1.29
1.00	1N5297	0.205	1.35
1.10	1N5298	0.180	1.40
1.20	1N5299	0.155	1.45
1.30	1N5300	0.135	1.50
1.40	1N5301	0.115	1.55
1.50	1N5302	0.105	1.60
1.60	1N5303	0.092	1.65
1.80	1N5304	0.074	1.75
2.00	1N5305	0.061	1.85
2.20	1N5306	0.052	1.95
2.40	1N5307	0.044	2.00
2.70	1N5308	0.035	2.15
3.00	1N5309	0.029	2.25
3.30	1N5310	0.024	3.35
3.60	1N5311	0.020	2.50
3.90	1N5312	0.017	2.60
4.30	1N5313	0.014	2.75
4.70	1N5314	0.012	2.90
0.5±0.3	MCL1300	0.500	1.00
1.0±0.6	MCL1301	0.200	1.50
2.0±0.6	MCL1302	0.100	2.00
3.0±0.6	MCL1303	0.050	2.00
4.0±0.6	MCL1304	0.025	2.50

▱ JAN/JANTX (V) availability

Low Voltage Regulators

High-conductance silicon diodes designed as stable forward-reference sources for transistor amplifier biasing and similar applications. Available in high reliability glass construction or economic plastic packaging.

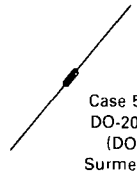

Case 51-02
DO-204AA
(DO-7)
Surmetic 20

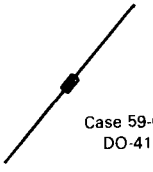

Case 59-03
DO-41

ELECTRICAL CHARACTERISTICS

(T_A = 25°C unless otherwise noted).

Forward Reference Voltage		I_F Test Current	Leakage Current I_R @ V_R		Device Type	Case
Min	Max	mA	μA	Volts		
0.63	0.71	10	10	5.0	MZ2360	59 Surmetic
1.24	1.38	10	10	5.0	MZ2361	51 Surmetic

18

Transient Suppressors

Transient suppressors designed for applications requiring protection of voltage sensitive electronic devices in danger of destruction by high energy voltage transients. Select from standard factory available types or design the suppressor to meet specific needs by paralleling cells. For specific options, i.e., non-standard voltages, higher power capacity, and package configurations, consult factory.

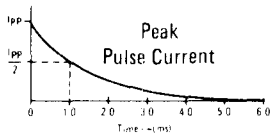

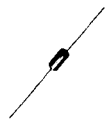

CASE 41-11

PEAK POWER DISSIPATION @ 1.0 ms = 1500 WATTS

Breakdown Voltage $V_{(BR)}$ Volts Nom	Breakdown Voltage @I_T mA	I_{RSM} Maximum Reverse Surge Current Amp	V_{RSM} Maximum Reverse Voltage @I_{RSM} Volts	Device Type		Case
6.0	1.0	120	8.5	1N5908		41-11
6.8	10	139	10.8	1N6267	1.5KE6.8	
7.5	10	128	11.7	1N6268	1.5KE7.5	
8.2	10	120	12.5	1N6269	1.5KE8.2	
9.1	1.0	109	13.8	1N6270	1.5KE9.1	
10	1.0	100	15.0	1N6271	1.5KE10	
11	1.0	93	16.2	1N6272	1.5KE11	
12	1.0	87	17.3	1N6273	1.5KE12	
13	1.0	79	19.0	1N6274	1.5KE13	
15	1.0	68	22.0	1N6275	1.5KE15	
16	1.0	64	23.5	1N6276	1.5KE16	
18	1.0	56.5	26.5	1N6277	1.5KE18	
20	1.0	51.5	29.1	1N6278	1.5KE20	
22	1.0	47.0	31.9	1N6279	1.5KE22	
24	1.0	43.0	34.7	1N6280	1.5KE24	
27	1.0	38.5	39.1	1N6281	1.5KE27	
30	1.0	34.5	43.5	1N6282	1.5KE30	
33	1.0	31.5	47.7	1N6283	1.5KE33	
36	1.0	29.0	52	1N6284	1.5KE36	
39	1.0	26.5	56.4	1N6285	1.5KE39	
43	1.0	24	61.9	1N6286	1.5KE43	
47	1.0	22.2	67.8	1N6287	1.5KE47	
51	1.0	20.4	73.5	1N6288	1.5KE51	
56	1.0	18.6	80.5	1N6289	1.5KE56	
62	1.0	16.9	89	1N6290	1.5KE62	
68	1.0	15.3	98	1N6291	1.5KE68	
75	1.0	13.9	108	1N6292	1.5KE75	
82	1.0	12.7	118	1N6293	1.5KE82	
91	1.0	11.4	131	1N6294	1.5KE91	
100	1.0	10.4	144	1N6295	1.5KE100	
110	1.0	9.5	158	1N6296	1.5KE110	
120	1.0	8.7	173	1N6297	1.5KE120	
130	1.0	8.0	187	1N6298	1.5KE130	
150	1.0	7.0	215	1N6299	1.5KE150	
160	1.0	6.5	230	1N6300	1.5KE160	
170	1.0	6.2	244	1N6301	1.5KE170	
180	1.0	5.8	258	1N6302	1.5KE180	
200	1.0	5.2	287	1N6303	1.5KE200	

Breakdown Voltage for Standard is ±10% Tolerance; ±5% version is available by adding an "A", i.e., 1N6267A, 1.5KE6.8A.
Clipper (back to back) versions are available by ordering the 1.5KE series with a "C" or "CA" suffix, i.e., 1.5KE6.8C or 1.5KE6.8CA.

5.0*	160	9.4	ICTE-5	MPTE-5	41-11
8.0*	100	15	ICTE-8	MPTE-8	
10*	90	16.7	ICTE-10	MPTE-10	
12*	70	21.2	ICTE-12	MPTE-12	
15*	60	25	ICTE-15	MPTE-15	
18*	50	30	ICTE-18	MPTE-18	
22*	40	37.5	ICTE-22	MPTE-22	
36*	23	65.2	ICTE-36	MPTE-36	
45*	19	78.9	ICTE-45	MPTE-45	

Clipper (back to back) versions are available by ordering the ICTE or MPTE series with a "C" suffix, i.e., ICTE-5C.
*Working Peak Reverse Voltage, V_{RWM} (Blocking or Stand-Off Voltage).

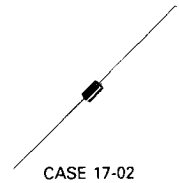

CASE 17-02

CASE 119-01

PEAK POWER DISSIPATION @ 1.0 ms = 600 WATTS

Breakdown Voltage $V_{(BR)}$ Volts Nom	Breakdown Voltage @ I_T mA	I_{RSM} Maximum Reverse Surge Current Amp	V_{RSM} Maximum Reverse Voltage @ I_{RSM} Volts	Device Type	Case
6.8	10	56	10.8	P6KE6.8	17-02
7.5	10	51	11.7	P6KE7.5	↓
8.2	10	48	12.5	P6KE8.2	↓
9.1	1.0	44	13.8	P6KE9.1	↓
10	1.0	40	15	P6KE10	↓
11	1.0	37	16.2	P6KE11	↓
12	1.0	35	17.3	P6KE12	↓
13	1.0	32	19	P6KE13	↓
15	1.0	27	22	P6KE15	↓
16	1.0	26	23.5	P6KE16	↓
18	1.0	23	26.5	P6KE18	↓
20	1.0	21	29.1	P6KE20	↓
22	1.0	19	31.9	P6KE22	↓
24	1.0	17	34.7	P6KE24	↓
27	1.0	15	39.1	P6KE27	↓
30	1.0	14	43.5	P6KE30	↓
33	1.0	12.6	47.7	P6KE33	↓
36	1.0	11.6	52	P6KE36	↓
39	1.0	10.6	56.4	P6KE39	↓
43	1.0	9.6	61.9	P6KE43	↓
47	1.0	8.9	67.8	P6KE47	↓
51	1.0	8.2	73.5	P6KE51	↓
56	1.0	7.4	80.5	P6KE56	↓
62	1.0	6.8	89	P6KE62	↓
68	1.0	6.1	98	P6KE68	↓
75	1.0	5.5	108	P6KE75	↓
82	1.0	5.1	118	P6KE82	↓
91	1.0	4.8	131	P6KE91	↓
100	1.0	4.2	144	P6KE100	↓
110	1.0	3.8	158	P6KE110	↓
120	1.0	3.5	173	P6KE120	↓
130	1.0	3.2	187	P6KE130	↓
150	1.0	2.8	215	P6KE150	↓
160	1.0	2.6	230	P6KE160	↓
170	1.0	2.5	244	P6KE170	↓
180	1.0	2.3	258	P6KE180	↓
200	1.0	2.1	287	P6KE200	↓

Breakdown Voltage for Standard is ±10% Tolerance; ±5% version is available by adding "A", i.e., P6KE6.8A. Clipper (back to back) versions are available by ordering with a "C" or "CA" suffix, i.e., P6KE6.8C or P6KE6.8CA.

PEAK POWER DISSIPATION @ 1.0 ms = 8000 WATTS

V_R Operating Voltage Nom Vdc	V_R Operating Voltage V(RMS)	I_R Reverse Current μA	ΔV_Z Breakdown Voltage Min Volts	@ I_{ZT} mA	V_C Clamping Voltage Max Volts	@ I_{pp} Amp	V_F Forward Voltage Volts	@ I_F Amp	Device Type	Case
14	10	50	16	0.4	24	200	1.5	10	MPZ5-16A	119-01
14	10	↓	16	0.4	20	200	↓	↓	MPZ5-16B	↓
28	20	↓	32	0.2	50	100	↓	↓	MPZ5-32A	↓
28	20	↓	32	0.2	45	100	↓	↓	MPZ5-32B	↓
28	20	↓	32	0.2	40	100	↓	↓	MPZ5-32C	↓
165	117	↓	180	0.03	250	20	↓	↓	MPZ5-180A	↓
165	117	↓	180	0.03	225	20	↓	↓	MPZ5-180B	↓
165	117	↓	180	0.03	205	20	↓	↓	MPZ5-180C	↓

Selected Zener Diode Options

In cases where standard specifications do not meet application requirements, an appropriate device can be selected and ordered from the following options. This coding system is provided as a means of communicating a specific requirement to Motorola. Certain voltages, tolerances and packages may not be available. Contact your Motorola sales representative for availability, price, and minimum order quantities.

NON-STANDARD ZENER DIODES SPECIAL VOLTAGE AND TOLERANCE RATINGS

JEDEC "1N" type numbers denote a specific Zener voltage, power rating, and tolerance. For example, JEDEC type 1N4728 is a standard 1 watt diode, rated at 3.3 volts ± 10%. A suffix "A" on this type number indicates a ± 5% voltage tolerance.

Special Motorola devices, with a choice of voltages and tolerances, are also available. The following diagram explains the Motorola coding system:

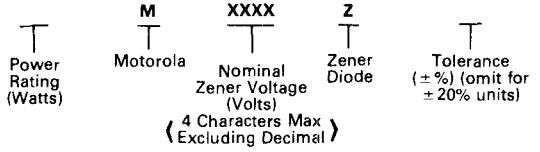

For example, the code for a special 10 watt Zener diode with a voltage of 41 volts and a tolerance of ± 1% would be: 10M41Z1.

Following is a list of other standard Motorola symbols for special Zener device orders (X's indicate nominal Zener voltage):

BASIC MOTOROLA TYPE	**ELECTRICALLY SIMILAR SERIES	DEVICE DESCRIPTION
1.4MXXAZXX	1.4M2.4AZ10 series	250 mW, Glass, DO-35
1.4MXXXZXX	1.4M6.8Z10 series	250 mW, Glass, DO-35
.4MXXAZXX	1N4370 & 1N746 series	400 mW/500 mW, Glass, DO-7
.4MXXXZXX	1N957 series	400 mW/500 mW, Glass, DO-7
.5MXXAZXX	1N4370 & 1N746 series	400 mW/500 mW, Glass, DO-35
.5MXXXZXX	1N957 series	400 mW/500 mW, Glass, DO-35
1MXXAZXX	1N3821 series	1 Watt, Metal, DO-13
1MXXXZXX	1N3016 series	1 Watt, Metal, DO-13
1MXXXZGXX	1N4728 series	1 Watt, Glass, DO-41
1MXXXZSXX	1N4728 series	1 Watt, Surmetic-30, DO-41
1.5MXXXZXX	1N3785 series	1.5 Watt Metal Can
5MXXXZSXX	1N5333 series	5 Watt Surmetic-40
10MXXAZXX	1N3993 series	10 Watt, Stud, DD-4
10MXXXZXX	1N2970 series	10 Watt, Stud, DD-4
50MXXAZXX	1N4557 series	50 Watt, TO-3
50MXXXZXX	1N2804 series	50 Watt, TO-3
50MXXAZSXX	1N4549 series	50 Watt, Stud, DO-5
50MXXXZSXX	1N3305 series	50 Watt, Stud, DO-5
MZG35-YYZ	1N5985 series	500 mW, Glass, DO-35
MZG41-YYZ	1N5913 series	1.5 Watt, Surmetic-30

** Electrical parameters shall be tested per the similar series listed. Test currents for non-standard voltages will be linearly interpoled between the test currents for standard parts on either side. For reverse polarity devices (10 W and 50 W) insert an "R" before tolerance.

1N5518 thru 1N5546 — This series may be ordered in ±2% and ±1% tolerance by adding the following suffix:

C = ±2% D = ±1%

For example the 1N5518D would be the same as the 1N5518B except V_Z = 3.3 ±1%.

MATCHED SETS OF ZENER DIODES

Zener diodes can also be obtained in sets consisting of two or more matched devices. The method for specifying such matched sets is similar to the one described for specifying units with a special voltage and/or tolerance except that two extra suffixes are added to the code number described above.

These units are marked with code letters to identify the matched sets and in addition, each unit in a set is marked with the same serial number which is different for each set being ordered.

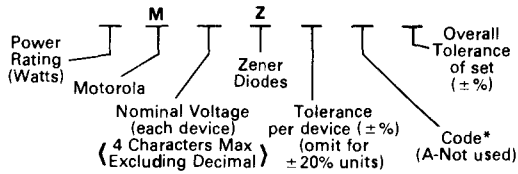

*Code:
- B — Two devices in series
- C — Three devices in series
- D — Four devices in series
- E — Five devices in series
- F — Six devices in series
- G — Seven devices in series
- H — Eight devices in series
- X — Two devices; one standard polarity, the other reverse polarity. (10 and 50 watts only)

i.e., 10M51Z5B1 is for two 10 watt zeners, each of 51 volts, ± 5%, matched to a total voltage of 102 volts ± 1%.

ZENER CLIPPERS

Special clipper diodes with opposing Zener junctions built into the device are available by using the following nomenclature:

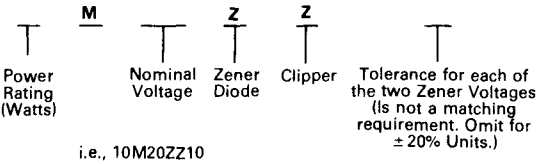

i.e., 10M20ZZ10

This nomenclature is applicable to all packages and power rating as restricted in the above paragraphs.

Small-Signal Transistors

This selector guide concentrates on those transistors that have emerged as the best values in various applications categories.

The reader is reminded that semiconductors are manufactured by 'batch' processes, and that each 'batch' may yield devices with widely varying parameters. This creates device 'families'. While the various specifications limits assigned to 'family members' have been selected on the basis of demonstrated industry need, modern testing methods have made the selection of devices with special characteristics simple and inexpensive. Where the specified characteristics of the devices listed in the following tables do not meet a particular design requirement, the designer is requested to contact his nearest Motorola sales representative for price quotations on special devices to fit his needs.

Table of Contents

	Page
Metal Packaged Small-Signal Transistors	19- 2
Plastic Encapsulated Small-Signal Transistors	19-11
Micro-T Transistors	19-21
Multiple Devices	19-22
Field-Effect Transistors	19-25

Metal Packaged Small-Signal Transistors

TO-18 METAL TRANSISTORS (NPN TYPES)

TABLE 1 – GENERAL PURPOSE SWITCH AND AMPLIFIER

Device Type	Polarity	V_{CEO} V_{CER} (+) (V_{DC})	I_C max. (mA)	H_{FE} min.@	I_C (mA)	V_{CE} (V)	$V_{CE(sat)}$@ (Volts)	I_C (mA)	I_B (mA)
BC107	NPN	45	100	110	2	5	0.6	100	5
BC108	NPN	20	100	110	2	5	0.6	100	5
BCY58	NPN	32	200	120	2	5	0.7	100	2.5
BCY59	NPN	45	200	120	2	5	0.7	100	2.5
BSX51	NPN	25	200	75	2	4.5	0.3	50	3
BSX51A	NPN	50	200	75	2	4.5	0.3	50	3
BSX51B	NPN	60	200	75	2	4.5	0.3	50	3
BSX52	NPN	25	200	180	2	4.5	0.3	50	3
BSX52A	NPN	50	200	180	2	4.5	0.3	50	3
BSX52B	NPN	60	200	180	2	4.5	0.3	50	3
2N2221	NPN	30	800	40	150	10	0.4	150	15
2N2221A	NPN	40	800	40	150	10	0.3	150	15
2N2222	NPN	30	800	100	150	10	0.4	150	15
2N2222A	NPN	40	800	100	150	10	0.3	150	15

LOW NOISE AMPLIFIER

Device type	Polarity	V_{CEO} (Vdc)	I_C max. (mA)	H_{FE} min.@	I_C (mA)	V_{CE} (Volts)	N_F max. (dB)	F = 1 KHz V_{CE} (Vdc)	I_C (mA)
BC109	NPN	20	30	200	2	5	4	5	0.2
2N930	NPN	45	30	100	0.01	5	4	5	0.2
2N2483	NPN	60	50	100	0.5	5	4	5	0.01
2N2484	NPN	60	50	200	0.5	5	3	5	0.01

TO-18 METAL TRANSISTORS (PNP TYPES)

TABLE 2 – GENERAL PURPOSE SWITCH AND AMPLIFIER

Device Type	Polarity	V_{CEO} (Volts)	I_C max. (mA)	H_{FE} min.@	I_C (mA)	V_{CE} (Volts)	$V_{CE(sat)}$@ Max. (V)	I_C (mA)	I_B (mA)
BC177	PNP	45	100	70	2	5.0	0.6	100	5
BC178	PNP	30	100	70	2	5.0	0.6	100	5
BCY70	PNP	40	200	50	10	10	0.5	50	5
BCY71	PNP	45	200	100	10	10	0.5	50	5
BCY72	PNP	25	200	50	10	10	0.65	50	5
BCY78	PNP	32	200	120	2	5.0	0.8	100	2.5
BCY79	PNP	45	200	120	2	5.0	0.8	100	2.5
BFW31	PNP	50(V_{CBO})	600	70	100	10	0.4	100	10
BSW21A	PNP	50	200	75	2	4.5	0.5	50	3
BSW22	PNP	25	200	180	2	4.5	0.5	50	3
BSW22A	PNP	50	200	180	2	4.5	0.5	50	3
2N2906	PNP	40	600	40	150	10	0.4	150	15
2N2906A	PNP	60	600	40	150	10	0.4	150	15
2N2907	PNP	40	600	100	150	10	0.4	150	15
2N2907A	PNP	60	600	100	150	10	0.4	150	15

LOW NOISE AMPLIFIER

Device Type	Polarity	V_{CEO} (Volts)	I_C max. (mA)	H_{FE} min.@	I_C (mA)	V_{CE} (Volts)	N_F max.@ (dB)	F = 1 KHz I_C (mA)	R_S = 2 KΩ I_C (mA)
BC179	PNP	20	100	120	2	5	4	0.2	5

F_T min. (MHz)	I_C (mA)	Complementary Type	Comments
150	10	BC177	Exists in A, B, H_{FE} groups
150	10	BC178	Exists in A, B and C, H_{FE} groups
125	10	BCY78	Exists VII, VIII, IX, X, H_{FE} groups
125	10	BCY79	Exists VII, VIII, IX, X, H_{FE} groups
150	10	BSW21	
150	10	BSW21A	
150	10	BSW21B	
150	10	BSW22	
150	10	BSW22A	
150	10	BSW22B	
250	20	2N2906	
250	20	2N2906A	
250	20	2N2907	
300	20	2N2907A	

F_T min. (MHz)	I_C (mA)	Complementary Type	Comments
150	10	BC179	Exists in B, C, H_{FE} groups
30	0.5		Exists in A, version
12	0.05		
15	0.05		

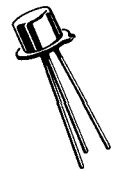

F_T (MHz) + Type min.	I_C (mA)	Complementary Type	Comments
130	10	BC107	Exists VI, A, B, H_{FE} range
130	10	BC108	Exsits A, B, H_{FE} groups
250	10		
200	10		
200	10		
180 +	10	BCY59	Exists H_{FE} group VII, VIII, IX, X
180 +	10	BCY59	Exists H_{FE} groups VII, VIII, IX
200	50	BFW32	
150	10		
150	10		
150	10		
200	50	2N2221	
200	50	2N2221A	
200	50	2N2222	
200	50	2N2222A	

F_T (MHz)	I_C (mA)	Complementary Type	Comments
130	10	BC109	Exists A, B, C, H_{FE} groups

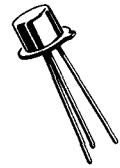

TO-18 TRANSISTORS

TABLE 3 – FAST SPEED SWITCH NPN

Device Type	Polarity	V_{CEO} V_{CER} (+) (Volts)	I_C max. (mA)	H_{FE}@	I_C (mA)	V_{CE} (Volts)
2N708	NPN	15		30	10	1
2N2368	NPN	15	200	20	10	1
2N2369	NPN	15	200	40	10	1
2N2369A	NPN	15	200	40	10	0.35
2N3227	NPN	20	200	100	10	1

TABLE 4 – FAST SPEED SWITCH PNP

2N2894	PNP	12	200	40	30	0.5
2N3012	PNP	12	200	30	30	0.5
2N3546	PNP	12		30	10	1.0
BSX29	PNP	12	200	30	30	0.5

TABLE 5 – CORE DRIVERS NPN

2N4013	NPN	30	1000	25	800	2
2N4014	NPN	50	1000	20	800	2

TABLE 6 – TO-18 HIGH VOLTAGE AMPLIFIERS NPN

Device Type	Polarity	V_{CEO} (Volts)	I_C max. (mA)	H_{FE} min.@	I_C (mA)
BSS71	NPN	200	500	40	30
BSS72	NPN	250	500	40	30
BSS73	NPN	300	500	40	30

TO-18 HIGH VOLTAGE AMPLIFIERS PNP

BSS74	PNP	200	500	35	30
BSS75	PNP	250	500	35	30
BSS76	PNP	300	500	35	30

TO-72 (TO-18 4 LEADS)

TABLE 8 – HIGH FREQUENCY RF

Device Type	Polarity	V_{CEO} (Volts)	I_C max. (mA)	H_{FE} min.	I_C (mA)	V_{CE} (Volts)
2N918	NPN	15	50	20	3	1
2N4260	PNP	15	30	30	10	1
2N4261	PNP	15	30	30	10	1

$V_{CE(sat)}$ max. (V)	I_C @ (mA)	I_B (mA)	T_{ON} (ns)	T_S (ns)	T_{OFF} @ (ns)	I_C (mA)	I_{B1} (mA)	I_{B2} (mA)
0.4	10	1	–	25	–	10	10	10
0.25	10	1	12	10	15	10	3	15
0.25	10	1	12	13	18	100	10	10
0.2	10	1	12	13	18	10	3	15
0.25	10	1	23	13	28	100	10	10
0.2	30	3	60	–	90	30	1.5	1.5
0.2	30	3	60	–	75	30	1.5	1.5
0.25	50	5	40	20	30	50	5	5
0.5	100	10	60	18	90	30	3	3
0.42	500	50	35	50	60	500	50	50
0.52	500	50	35	50	60	500	50	50

V_{CE} (Volts)	$V_{CE(sat)}$@ (Volts)	I_C (mA)	I_B (mA)	$F_{T(typ)}$ @ (MHz)	I_C (mA)	Complementary Type
10	0.5	50	5	100	20	BSS74
10	0.5	50	5	100	20	BSS75
10	0.5	50	5	100	20	BSS76
10	0.5	50	5	100	20	BSS71
10	0.5	50	5	100	20	BSS72
10	0.5	50	5	100	20	BSS73

F_T min. @ MHz	I_C (mA)	G_p@ (dB)	I_C (mA)	V_{CB} (Volts)	H_F max.@ (ns)	I_C (mA)	V_{CE} (Volts)	F MHz
600	4	15	6	12	6	10	6	80
1600	10	15	10	10	0.03	10	10	31.8
2000	10	15	10	10	0.06	10	10	31.8

TO-39 METAL TRANSISTORS (NPN TYPES)

TABLE 9 – AMPLIFIER AND SWITCH

Device Type	Polarity	V_{CEO} V_{CER} + (Vdc)	I_C max.	H_{FE} min.@ –	I_C (mA)	V_{CE} (Vdc)	$V_{CE(sat)}$ max. (Vdc)	I_C (mA)	I_B (mA)
2N1613	NPN	50+	800	40	150	10	1.5	150	15
2N1711	NPN	50+	–	100	150	10	1.5	150	15
2N2218	NPN	30	800	40	150	10	0.4	150	15
2N2218A	NPN	40	800	40	150	10	0.3	150	15
2N2219	NPN	30	800	100	150	10	0.4	150	15
2N2219A	NPN	40	800	100	150	10	0.3	150	15

MEDIUM CURRENT AMPLIFIER AND SWITCH/AUDIO DRIVERS

BFY50	NPN	35	1000	30	150	6	0.2	150	15
BFY51	NPN	30	1000	40	150	6	0.35	150	15
BFY52	NPN	20	1000	50	150	6	0.35	150	15
BSX45	NPN	40	1000	40	100	1	1.0	1000	100
BSX46	NPN	60	1000	40	100	1	1.0	1000	100
BSX47	NPN	80	1000	40	150	1	0.9	500	25
BC140	NPN	40	1000	40	100	1	1.0	1000	100
BC141	NPN	60	1000	40	100	1	1.0	1000	100
2N1893	NPN	80	1000	40	150	10	5.0	150	15
2N3019	NPN	80	1000	100	150	10	0.2	150	15
2N3053	NPN	80	700	50	150	10	1.4	150	15

TABLE 10 – VIDEO OUTPUT AND HIGH VOLTAGE AMPLIFIER AND SWITCH

Device Type	Polarity	V_{CEO} (Volts)	I_C max. (mA)	H_{FE} min.@	I_C (mA)	V_{CE} (Volts)	$V_{CE(sat)}$@ (Volts)	I_C (mA)	I_B (mA)
BF257	NPN	160	100	25	30	10	1	30	6
BF258	NPN	250	100	25	30	10	1	30	6
BF259	NPN	300	100	25	30	10	1	30	6
BSS77	NPN	200	500	40	30	10	0.4	30	3
BSS78	NPN	250	500	40	30	10	0.4	30	3

TABLE 11 – CORE DRIVERS

Device Type	Polarity	V_{CEO} (Vdc)	I_C max. (mA)	H_{FE}@ –	I_C (mA)	V_{CE} (Vdc)	$V_{CE(sat)}$@ max. (Vdc)	I_C (mA)	V_{CE} (Volts)
2N3725	NPN	50	1000	20	800	2	0.6	500	50

TO-39 METAL TRANSISTORS (PNP TYPES)

TABLE 12 – GENERAL PURPOSE AMPLIFIER AND SWITCH

Device Type	Polarity	V_{CEO} (Volts)	I_C max. (mA)	H_{FE} min.@ –	I_C (mA)	V_{CE} (Volts)	$V_{CE(sat)}$@ (Vdc)	I_C (mA)	V_{CE} (Volts)
2N2904	PNP	40	800	40	150	10	0.4	150	15
2N2904A	PNP	60	800	40	150	10	0.4	150	15
2N2905	PNP	40	800	100	150	10	0.4	150	15
2N2905A	PNP	60	800	100	150	10	0.4	150	15

F_T min.@ (MHz)	I_C (mA)	Complementary Type	Comments
60	50		
70	50		
250	20	2N2904	
250	20	2N2904A	
250	20	2N2905	
250	20	2N2905A	

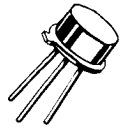

60	50		
50	50		
50	50		
50	50		Exists in -6, -10, -16 H_{FE} groups
50	50		Exists in -6, -10, -16 H_{FE} groups
50	50		
50	50		Exists in -6, -10, -16 H_{FE} groups
50	50		Exists in -6, -10, -16 H_{FE} groups
50	50		
100	50		
100	50	2N4890	Exists A Version

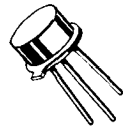

F_T Type@ (MHz)	I_C (mA)	C_{OB} max. (pF)
110	30	5.5
110	30	5.5
110	30	5.5
70	20	5.5
70	20	5.5

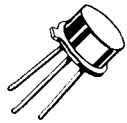

T_{ON} (ns)	T_S (ns)	T_{OFF} (ns)	I_C (mA)	I_{B1} (mA)	I_{B2} (mA)
35	50	60	500	50	50

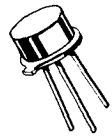

F_T min.@ (MHz)	I_C (mA)	Complementary Type
200	50	2N2218
200	50	2N2218A
200	50	2N2219
200	50	2N2219A

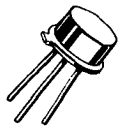

TABLE 13 – MEDIUM CURRENT AMPLIFIER, SWITCH AND AUDIO DRIVER

Device Type	Polarity	V_{CEO} (Volts)	I_C max. (mA)	H_{FE} min.@ –	I_C (mA)	V_{CE} (Volts)	$V_{CE(sat)}$@ (Vdc)	I_C (mA)	V_{CE} (Volts)
BC160	PNP	40	1000	40	100	1	1.0	1000	100
BC161	PNP	60	1000	40	100	1	1.0	1000	100
BFX38	PNP	55	1000	85	100	5	0.15	150	15
BFX39	PNP	55	1000	40	100	5	0.15	150	15
BFX40	PNP	75	1000	85	100	5	0.15	150	15
BFX41	PNP	75	1000	40	100	5	0.15	150	15
2N4033	PNP	80	1000	100	100	5	0.5	500	50
2N4404	PNP	80	1000	40	150	1	0.2	150	15
2N4405	PNP	80	1000	100	150	1	0.2	150	15
2N4406	PNP	80	2000	25	150	1	0.2	150	15
2N4407	PNP	80	2000	75	150	1	0.2	150	15
2N4890	PNP	40	700	50	150	10	0.4	150	15

TABLE 14 – HIGH VOLTAGE AMPLIFIER AND SWITCH

Device Type	Polarity	V_{CEO} (Volts)	I_C max. (mA)	H_{FE} min.@	I_C (mA)	V_{CE} (Volts)	$V_{CE(sat)}$@ (Volts)	I_C (mA)	I_B (mA)
2N3634	PNP	140	1000	50	50	10	0.5	50	5
2N3635	PNP	140	1000	100	50	10	0.5	50	5
2N3636	PNP	175	1000	50	50	10	0.5	50	5
2N3637	PNP	175	1000	100	50	10	0.5	50	5
2N3743	PNP	300	500	25	30	10	5	10	1

TO-39 POWER TRANSISTORS

Device Type	Polarity	V_{CEO}	I_C max. (Amr)	P_D* (Watts)	H_{FE} min.@	I_C (mA)	V_{CE} (Volts)	$V_{CE(sat)}$@ (Volts)	I_C (mA)	I_B (mA)
2N3439	NPN	350	1	5	40	20	10	0.5	50	4
2N3440	NPN	250	1	5	40	20	10	0.5	50	4
2N5415	PNP	200	1	5	30	50	10	2.5	50	5
2N5416	PNP	300	1	5	30	50	10	2.5	50	5
2N5679	PNP	100	1	10	40	250	2	0.6	250	25
2N5680	PNP	120	1	10	40	250	2	0.6	250	25
2N5681	NPN	100	1	10	40	250	2	0.6	250	25
2N5682	NPN	120	1	10	40	250	2	0.6	250	25
2N4235	PNP	60	3	6	30	250	1	0.6	1000	125
2N4236	PNP	80	3	6	30	250	1	0.6	1000	125
2N4238	NPN	60	3	6	30	250	1	0.6	1000	100
2N4239	NPN	80	3	6	30	250	1	0.6	1000	100
BUY495	NPN	200	3	10	40	500	5	0.2	500	50

* P_D at 25 °C case temp.

TO-39 DARLINGTONS TRANSISTORS

Device Type	Polarity	V_{CER} R = 100 (Volts)	I_C max. (mA)	H_{FE} min.@	I_C (mA)	V_{CE} (Volts)	$V_{CE(sat)}$ max. (Volts)	I_C (mA)	I_B (mA)
BSS50	NPN	45	1000	1500	500	10	1.6	1000	4
BSS51	NPN	60	1000	1500	500	10	1.6	1000	4
BSS52	NPN	80	1000	1500	500	10	1.6	1000	4

F_T min.@ (MHz)	I_C (mA)	Complementary Type
50	50	Exists in -6, -10, -16 H_{FE} groups
50	50	Exists in -6, -10, -16 H_{FE} groups
100	50	
100	50	BFY56A
100	50	
100	50	
100	50	
200	50	
200	50	
150	50	
150	50	
100	50	2N3053

F_T (MHz)	I_C (mA)	T_{ON} max. (ns)	T_{OFF} max. (ns)
150	30	400	600
200	30	400	600
150	30	400	600
200	30	400	600
30	10	—	—

F_T (MHz)	I_C (mA)	Complementary Type	Comments
15	10	2N5416	
15	10	2N5415	High voltage
15	10	2N3440	
15	10	2N3439	
30	100	2N5682	Medium voltage
30	100	2N5679	
30	100	2N5680	
3	100	2N4238	
3	100	2N4239	Low voltage
2	100	2N4234	

F_T(Typ) (MHz)	I_C (mA)
350	500
350	500
350	500

Governmental Qualification Status
Small-Signal Products under CCQ, CECC

2N2218 2N2218 A	2N2905 2N2905 A
2N2219 2N2219 A	2N2906 2N2906 A
2N2221 2N2221 A	2N2907 2N2907 A
2N2222 2N2222 A	2N1711
2N2484	2N1613
2N1893	2N3439
2N2369E	2N3440
2N2369A	2N5415
BC107-108-109	2N5416
2N2904 2N2904 A	2N2920

All these products are available in levels E and L, level F on request.

Plastic-Encapsulated Small-Signal Transistors

Small-signal plastic transistors, like other semiconductor devices, are manufactured by a batch process. Thousands of individual transistors are fabricated on a thin wafer of silicon using masked diffusion and evaporation techniques that operate simultaneously on all devices on the wafer. Nevertheless, because even a microscopic variation in materials or fabrication conditions can cause fluctuations in the electrical characteristics of the final devices, no two transistors on a wafer are exactly alike.

Between wafers of the same batch, even though they are subjected to the same fabrication processes, the device specifications can differ significantly. Thus the spread of characteristics within a "family" (devices manufactured to a given process specification) is often too wide for practical consideration as a design criterion. Hence each family is divided into different device classifications, each with its own type number. Such "family members" have much narrower specification limits than the family as a whole.

The price of each family member depends on three factors:

1. *The performance capacity.* Obviously, devices with the highest available breakdown voltage are more expensive than those with lower ratings because there are fewer on a wafer.

2. *The spread of characteristics.* That is, device types with narrow limits on one or more of its critical parameters are more expensive than those with wider limits.

3. *Popularity.* A device specification that is in great demand is less expensive than some other "selection" of limits that may yield as many devices but has a smaller sales potential.

In view of these variations, it is often difficult to make a cost-effective device selection, even if all specifications of every family member are clearly listed. The subsequent "preferred devices" selector guide has been developed to simplify the selection problem.

Preferred devices, in this concept, are those whose specifications groupings have proved to be the most popular – resulting in a combination of good performance and low cost. In each of the subsequent tables, the major specifications of these devices are given for easy comparison.

TO 92 Package

TABLE 1 – GENERAL PURPOSE AMPLIFIER TRANSISTORS (TO-92)

The general purpose Transistors are designed for small-signal amplification from D.C. to low radio frequencies. They are also useful as oscillators and general purpose switches.

NPN	PNP	BV_{CEO} (Volts)	P_d (mW)	I_C max. (mA) Cont.	H_{FE}@ Min.	H_{FE}@ Max.	I_C (mA)	V_{CE} (Volts)	F_T Typ. MHz	N_F Max. (dB)	Pin Out
BC182	BC212	50	625	100	120	460	2.0	5.0	200	10	CBE
BC182A	BC212A	50	625	100	120	220	2.0	5.0	200	10	CBE
BC182B	BC212B	50	626	100	180	460	2.0	5.0	200	10	CBE
BC237	BC307	45	625	100	120	460	2.0	5.0	200	10	CBE
BC237A	BC307A	45	625	100	120	220	2.0	5.0	200	10	CBE
BC237B	BC307B	45	625	100	180	460	2.0	5.0	200	10	CBE
BC237C	BC307C	45	625	100	380	800	2.0	5.0	200	10	CBE
BC23B	BC308	25	625	100	120	800	2.0	5.0	200	10	CBE
BC238A	BC30BA	25	625	100	120	220	2.0	5.0	200	10	CBE
BC23BB	BC308B	25	625	100	180	460	2.0	5.0	200	10	CBE
BC23BC	BC30BC	25	625	100	380	800	2.0	5.0	200	10	CBE
BC239	BC309	45	625	100	180	800	2.0	5.0	240	4	CBE
BC239A	BC309A	45	625	100	120	220	2.0	5.0	240	4	CBE
BC239B	BC309B	45	625	100	180	460	2.0	5.0	240	4	CBE
BC239C	BC309C	45	625	100	380	800	2.0	5.0	240	4	CBE
BC546	BC556	65	625	100	120	450	2.0	5.0	300	10	CBE
BC546A	BC556A	65	625	100	120	220	2.0	5.0	300	10	CBE
BC546B	BC556B	65	625	100	180	450	2.0	5.0	300	10	CBE
BC547	BC557	45	625	100	120	450	2.0	5.0	300	10	CBE
BC547A	BC557A	45	625	100	120	220	2.0	5.0	300	10	CBE
BC547B	BC557B	45	625	100	180	450	2.0	5.0	300	10	CBE
BC547C	BC557C	45	625	100	380	800	2.0	5.0	300	10	CBE
BC548	BC558	30	625	100	120	800	2.0	5.0	300	10	CBE
BC548A	BC55BA	30	625	100	120	220	2.0	5.0	300	10	CBE
BC548B	BC558B	30	625	100	180	450	2.0	5.0	300	10	CBE
BC54BC	BC558C	30	625	100	380	800	2.0	5.0	300	10	CBE

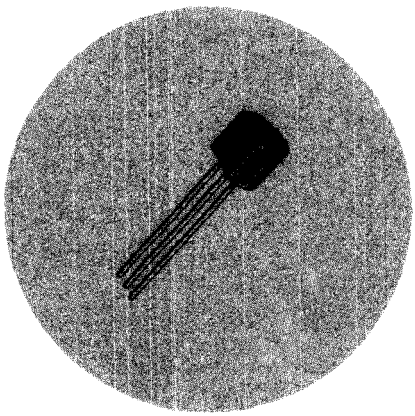

TABLE 2 – LOW NOISE AND GOOD H_{FE} LINEARITY

These devices are designed to use on applications where good H_{FE} linearity and low noise characteristics are required: Instrumentation, Hi-Fi Preamplifier.

NPN	PNP	BV_{CEO} (Volts) Amb.	P_d mW 25 °C Min.	H_{FE}@ I_C=10 μA, V_{CE} = 5 V Min.	Typ.	H_{FE}@ I_C = 2mA, V_{CE} = 5 V Min.	Max.	V_T 120 Hz[1] Typ.	mV Max.	N_F (dB)[2] Typ.	Max.	F_T Typ. (MHz)	Pinning
BC239	BC309	45	625	–	–	120	800	9.5	–	2	4	240	CBE
BC239A	BC309A	45	625	–	90	120	220	9.5	–	2	4	240	CBE
BC239B	BC309B	45	625	–	150	180	460	9.5	–	2	4	240	CBE
BC239C	BC309C	45	625	–	270	380	800	9.5	–	2	4	240	CBE
BC413	BC415	30	625	100	–	180	800	8	12	0.6	2.5	250	CBE
BC413B	BC415B	30	625	100	150	180	460	8	12	0.6	2.5	250	CBE
BC413C	BC415C	30	625	100	270	380	800	8	12	0.6	2.5	250	CBE
BC414	BC416	45	625	100	–	180	800	8	12	0.6	2.5	250	CBE
BC414B	BC416B	45	625	100	150	180	460	8	12	0.6	2.5	250	CBE
BC414C	BC416C	45	625	100	270	380	800	8	12	0.6	2.5	250	CBE
BC549	BC559	30	625	100	–	180	800	8	12	0.6	2.5	250	CBE
BC549B	BC559B	30	625	100	150	180	460	8	12	0.6	2.5	250	CBE
BC549C	BC559C	30	625	100	270	380	800	8	12	0.6	2.5	250	CBE
BC550	BC560	45	625	100	–	180	800	8	12	0.6	2.5	250	CBE
BC550B	BC560B	45	625	100	150	180	460	8	12	0.6	2.5	250	CBE
BC550C	BC560C	45	625	100	270	380	800	8	12	0.6	2.5	250	CBE
BC650	–	30	625	–	–	380	1400	–	7.6(6.8*)	–	1(§)	300	EBC
BC650C	–	30	625	–	–	380	820	–	7.6(6.8*)	–	1(§)	300	EBC
BC650D	–	45	625	–	–	680	1400	–	7.6(6.8*)	–	1(§)	300	EBC
BC651	–	45	625	–	–	380	1400	–	7.6(6.8*)	–	1(§)	300	EBC
BC651C	–	45	625	–	–	380	820	–	7.6(6.8*)	–	1(§)	300	EBC
BC651D	–	45	625	–	–	680	1400	–	7.6(6.8*)	–	1(§)	300	EBC
MPSA18	–	45	625	400	500	500	–	7	–	–	1.5	160	EBC

1 V_T: Total Input Noise Voltage (see Application Note, BC413/BC414 and BC415/BC416 Data Sheets) at R_S = 2 KΩ, I_C = 200 μA, V_{CE} = 5 Volts.
2 N_F: Noise Figure at R_S = 2K, I_C = 200 μA, V_{CE} = 5 Volts. F = 30 Hz to 15 KHz.
* "S" Version
§ @ 1 KHz.

TABLE 3 – HIGH CURRENT AMPLIFIER TRANSISTORS (TO-92)

Useful in Low Power Audio Output Stages and Medium Current Switches.

NPN	PNP	BV_{CEO} (Volts)	P_D mW 25 °C Amb.	I_C (mA) Cont.	Min.	H_{FE}@ Max.	I_C (mA)	V_{CE} (Volts)	F_T Typical (MHz)	Pinning
BC337	BC327	45	625	800	100	600	100	1	210	CBE
BC337-16	BC327-16	45	625	800	100	250	100	1	210	CBE
BC337-25	BC327-25	45	625	800	160	400	100	1	210	CBE
BC337-40		45	625	800	250	600	100	1	210	CBE
BC338	BC328	25	625	800	100	600	100	1	210	CBE
BC338-16	BC328-16	25	625	800	100	250	100	1	210	CBE
BC338-25	BC328-25	25	625	800	160	400	100	1	210	CBE
BC338-40		25	625	800	250	600	100	1	210	CBE
BC445	BC446	60	625	300	70	–	10	5	250/200[1]	CBE
BC447	BC448	80	625	300	70	–	10	5	250/200[1]	CBE
BC449	BC450	100	625	300	70	–	10	5	250/200[1]	CBE
BC485	BC486	45	625	1000	60	400	100	2	200/150[1]	CBE
BC485A	BC486A	45	625	1000	100	250	100	2	200/150[1]	CBE
BC487	BC488	60	625	1000	60	400	100	2	200/150[1]	CBE
BC487A	BC488A	60	625	1000	160	250	100	2	200/150[1]	CBE
BC489	BC490	80	625	1000	60	400	100	2	200/150[1]	CBE
BC489A	BC490A	80	625	1000	100	250	100	2	200/150[1]	CBE
MPSA05	MPSA55	60	625	500	50	–	100	1	150/175[1]	EBC
MPSA06	MPSA56	80	625	500	50	–	100	1	150/175[1]	EBC

1. Relevant to PNP

TABLE 4 – HIGH VOLTAGE AMPLIFIER TRANSISTORS (TO-92)

These high-voltage transistors are designed for driving neon bulbs and Nixie® indicator tubes, for direct line operation, and for other applications requiring high-voltage capability at relatively low collector current. These devices are listed in order of decreasing breakdown voltage (BV_{CEO}).

Device Type	BV_{CEO} Volts Min.	I_C Amp Cont.	h_{FE} Min.	@ I_C mA	$V_{CE(sat)}$ Volts Max.	@ I_C mA	& I_B mA	f_T MHz Min.	@ I_C mA
NPN									
BFB44	400	0.5	40	30	0.5	10	1	50	10
MPSA44	400	0.3	40	100	0.75	50	5	20	10
BF845	350	0.5	40	30	0.5	10	1	50	10
MPSA45	350	0.3	50	100	0.75	50	5	20	10
2N6517	350	0.5	30	30	0.30	10	1.0	40	10
BF393	300	0.5	40	10	0.2	20	2	50	10
MPS-A42	300	0.5	40	30	0.5	20	2	50	10
BF392	250	0.5	40	10	0.2	20	2	50	10
BF391	200	0.5	40	10	0.2	20	2	50	10
MPS-A43	200	0.5	40	10	0.4	20	2	50	10
MPS-D01	200	0.1	20	30				40	10
2N5551	160	0.6	80	10	0.15	10	1	100	10
2N5550	140	0.6	60	10	0.15	10	1	100	10
MPS-D02	140	0.05	20	30				40	10
MPS-D03	100	0.05	50	10	0.2	10	1	60	10
MPS-L01	100	0.05	20	30				40	10
PNP									
2N6520	350	0.5	30	30	0.30	10	1.0	40	10
BF493	300	0.5	40	10	0.2	20	2	50	10
MPS-A92	300	0.5	40	10	0.5	20	2	50	10
BF492	250	0.5	40	10	0.2	20	2	50	10
BF491	200	0.5	40	10	0.2	20	2	50	10
MPS-A93	200	0.5	40	10	0.4	20	2	50	10
MPS-D51	200	0.1	20	30				40	10
2N5401	150	0.6	60	10	0.2	10	1	100	10
MPS-D52	140	0.05	20	30				40	10
2N5400	120	0.6	40	10	0.2	10	1	100	10
MPS-D53	100	0.05	20	30				40	10
MPS-L51	100	0.6	40	50	0.25	10	1	60	10

TABLE 5 – INDUSTRIAL TRANSISTORS (TO-92)

These devices are special products ranges intended for use in applications wich require well specified high performing devices like high quality amplifier differential input, driver stage.

NPN	PNP	BV_{CEO} (Volts)	P_D mW 25°C Amb.	I_C (mA) Cont.	H_{FE} Min.	H_{FE} Max.	@ I_C (mA)	V_{CE} (Volts)	F_T Typ. (MHz)	Typ. (dB)	Pin Out	T_{ON} Typ. (nS)	T_{OFF} Typ. (nS)
BCX25	BCX26	60	625	200	70	400	10	5	250	2	CBE	70	1000/600
BCX27	BCX28	80	625	200	70	400	10	5	250	2	CBE	70	1000/600
BCX29	BCX30	100	625	200	70	400	10	5	250	2	CBE	70	1000/600
BCX45	BCX46	45	625	1000	50	–	100	2	150	2	CBE	30	380
BCX47	BCX48	60	625	1000	50	–	100	2	150	2	CBE	30	380
BCX49	BCX50	80	625	1000	50	–	100	2	150	2	CBE	30	380
BCX58	BCX7B	32	625	200	120	630	2	5	250	2	CBE	75	600/350
BCX58-8	BCX78-8	32	625	200	180	310	2	5	250	2	CBE	75	600/350
BCX58-9	BCX78-9	32	625	200	250	460	2	5	250	2	CBE	75	600/350
BCX59	BCX79	45	625	200	120	630	2	5	250	2	CBE	75	600/350
BCX59-8	BCX79-8	45	625	200	180	310	2	5	250	2	CBE	75	600/350
BCX59-9	BCX79-9	45	625	200	250	460	2	5	250	2	CBE	75	600/350
BCX73	BCX75	32	625	800	100	630	100	1	100*	10[1]	CBE	60[1]	150[1]
BCX73-16	BCX75-16	32	625	800	100	250	100	1	100*	10[1]	CBE	60	150
BCX73-25	BCX75-25	32	625	800	160	400	100	1	100*	10[1]	CBE	60	150
BCX73-40		32	625	800	250	630	100	1	100*	10[1]	CBE	60	150
BCX74	BCX76	45	625	800	100	630	100	1	100*	10[1]	CBE	60	150
BCX74-16	BCX76-16	45	625	800	100	250	100	1	100*	10[1]	CBE	60	150
BCX74-25	BCX76-25	45	625	800	160	400	100	1	100*	10[1]	CBE	60	150
BCX74-40		45	625	800	250	630	100	1	100*	10[1]	CBE	60	150
	MPS2907	40	625	600	75	–	10	10	200*	–	EBC	26	70
MPS2222		30	625	600	75	–	10	10	250*	–	EBC	–	–

* f_T Min.

TABLE 6 – RF TRANSISTORS

The RF transistors are designed for Small Signal amplification from RF to VHF/UHF frequencies. They are also used as mixers and oscillators in the same frequency ranges. Several types are AGC characterised.

AM/FM NPN	PNP	Pin Out	BV_{CEO} min. Volts	P_d max. mW	I_C max. mA	H_{FE} Min.	@ I_C mA	V_{CE} Volts	F_T min. MHz	C_{RE} C_{RB} pF	C_{OB} pf	P_G Typ. dB	N_F dB	F MHz
BF199		CEB	25	625	100	40	7	10	750(§)	0.28(§)				
BF241/240		CEB	20	625	100	65	1	10	260(§)	0.95(§)			1.7(§)	1
BF254		CEB	40	625	25	35	1	10	400	0.34				
BF254-3		CEB	20	625	100	65	1	10	260(§)	0.95(§)			1.7(§)	1
BF254-4		CEB	20	625	100	100	1	10	260(§)	0.95(§)			1.7(§)	11
BF255		CEB	20	625	100	35	1	10	200(§)	0.95(§)			1.7(§)	1
BF255-2		CEB	20	625	100	35	1	10	200(§)	0.95(§)			1.7(§)	1
BF255-3		CEB	20	625	100	65	1	10	200(§)	0.95(§)			1.7(§)	1
BF224		CEB	30	625	25	30	7	10	300	28(§)			2.5(§)	100
													3.5(§)	200
MPS918		EBC	15	625	100	20	3.0	10	600		1.7	15	6.0	60
VHF														
	MPSH54	EBC	80	625	100	30	1.5	10	185(§)	1.6			2.0	1
BF374		BEC	25	625	100	70			800	0.6		20	4.0(§)	100
BF375		BEC	25	625	100	35			800	0.6		20	4.0(§)	100
BF959		CEB	20	625	100	40	20	10	700	.65(§)			3(§)	200
	UHF													
	BF506	CBE	35	625	50	20	3	10	400	0.25		22	4	200
	BF509	CBE	35	625	50	20	3	10	600	0.25		22	2.5	200

(§) Typical

TABLE 7 – HIGH-SPEED SATURATED SWITCHING TRANSISTORS

The transistors listed in this table are specially optimized for high-speed saturated switches. They are heavily gold doped and processed to provide very short switching times and low output capacitance (below 6 pF). The transistors are listed in order of decreasing turn-on time (t_{on}).

Device Type	t_{on} ns Max.	& t_{off} ns Max.	@ I_C mA	BV_{CEO} Volts Min.	h_{FE} Min.	@ I_C mA	$V_{CEO(sat)}$ Volts Max.	@ I_C mA	& I_B mA	f_T MHz Min.	@ I_C mA
NPN											
2N3904	70	250	10	40	100	10	0.2	10	1	300	10
2N3903	70	225	10	40	50	10	0.2	10	1	250	10
2N4400	35	255	150	40	50	150	0.4	150	15	200	20
MPS3646	18	28	300	15	30	30	0.2	30	3	350	30
MPS3013	15	25	300	15	15	300	0.5	300	30	350	30
MPS2369	12	18	10	15	40	10	0.25	10	1	500	10
PNP											
MPS404	223*	835*	10	12[1]	30	12	0.2	24	1	–	–
MPS404A	223*	835*	10	25[1]	30	12	0.2	24	1	–	–
2N3906	70	250	10	40	100	10	0.25	10	1	250	10
2N3905	70	225	10	40	100	10	0.25	10	1	200	10
2N4402	35	255	150	40	50	150	0.4	150	15	150	20
MPS3640	25	35	50	12	30	10	0.2	10	1	500	10
MPS4257	15	15	10	6	30	50	0.15	10	1	500	10
MPS4258	15	20	10	12	30	50	0.15	10	1	700	10

1. BV_{EBO}
* Typ.

TABLE 8 – DARLINGTON TRANSISTORS (TO-92)

Darlington amplifiers are cascade transistors used in applications requiring very high gain and input impedance. These devices have monolithic construction and are listed in order of decreasing voltage (BV_{CEO}).

Device Type	Polarity	Absolute Max Rating at 25°C		BVCEO	HFE (1)				VCE SAT			FT		Complementary
		Max PD Free Air at 25°C (mW)	Max I_C (mA)	(v)	Bias VCE (v)	Bias I_C (mA)	Min.	Max.	Bias I_C (mA)	Bias I_B (mA)	Max. v	I_C (mA)	Min. (MHz)	Device Type
BC372	N	625	1000	100	5.0	100	25 K	160 K	250	0.25	1.0	100	100	
BC373	N	625	1000	80	5.0	100	25 K	160 K	250	0.25	1.0	100	100	
BC617	N	625	1000	40	5.0	200	20 K	70 K	200	0.20	1.1	500	150	
BC618	N	625	1000	55	5.0	200	10 K	50 K	200	0.20	1.1	500	150	
MPSA13	N	625	300	30(3)	5.0	100	10 K		100	0.10	1.5	10	125	MPSA63
MPSA14	N	625	300	30(3)	5.0	100	20 K		100	0.10	1.5	10	125	MPSA64
MPSA25	N	625	500	40(3)	5.0	100	10 K		100	0.10	1.5	10	125	MPSA75
MPSA26	N	625	500	50(3)	5.0	100	10 K		100	0.10	1.5	10	125	MPSA76
MPSA27	N	625	500	60(3)	5.0	100	10 K		100	0.10	1.5	10	125	MPSA77
MPSA28	N	625	500	80(3)	5.0	100	10 K		100	0.10	1.4	10	125	
MPSA29	N	625	500	100(3)	5.0	100	10 K		100	0.10	1.4	10	125	
MPSA63	P	625	300	20(3)	5.0	100	10 K		100	0.10	1.5	100	125	MPSA13
MPSA64	P	625	300	30(3)	5.0	100	20 K		100	0.10	1.5	100	125	MPSA14
MPSA75	P	625	300	40(3)	5.0	100	10 K		100	0.10	1.5	10	125	MPSA25
MPSA76	P	625	300	50(3)	5.0	100	10 K		100	0.10	1.5	10	125	MPSA26
MPSA77	P	625	300	60(3)	5.0	100	10 K		100	0.10	1.5	10	125	MPSA27

(1) Pulse Test/Pulse Width ≤ 300 μs – Duty Cycle ≤ 2.0% (3) BVCES IC = 100 μA
(2) NF I_C = 100 μA: VCE = 5 v, RS = 10 K F = 10 Hz to 15.7 KHz

TABLE 9 – DUAL DIODES

Dual diodes designed for use in low cost biasing, steering and voltage doubler applications including series, common cathode and common anode diodes.

Device Type	$V_{(BR)}$ Volts Min.	@ $I_{(BR)}$ μA	I_R μA Max.	@ V_R Volts	V_F @ Volts Min./Max.	I_F mA	$C_{VR=0}$ pF Max.	t_{rr} ns Max.	Description
MSD6100	100	100	0.1	50	0.67/0.82	10	1.5	4.0	Switching
MSD6102	70	100	0.1	50	0.76/1.0	10	3.0	100	Common Cathode
MSD6150	70	100	0.1	50	–/1.0	10	8.0	100	Common Cathode

TABLE 10 – CENTRAL COLLECTOR 800 MW TO-92

The transistors listed in this table have been designed to provide power dissipation. These devices are listed in order of decreasing breakdown voltage (BVCEO).

Device Type	BV_{CEO} Volts Min.	I_C Amp Cont.	h_{FE} Min.	@ I_C mA	$V_{CE(sat)}$ Volts Max.	@ I_C mA	@ I_B mA	f_T MHz Min.	@ I_C mA	PIN OUT
NPN										
8F420	300	0.1	40	25	2.0	20	2	60	10	ECB
BF422	250	0.1	50	25	2.0	20	2	60	10	ECB
BC639	80	1.0	40	150	0.5	500	50	60	10	ECB
BC637	60	1.0	40	150	0.5	500	50	60	10	ECB
BC635	45	1.0	40	150	0.5	500	50	60	10	ECB
BC368	20	1.0	60	1000	0.5	1000	100	65	10	ECB
PNP										
BF421	300	0.1	40	25	2.0	20	2	60	10	ECB
BF423	250	0.1	50	25	2.0	20	2	60	10	ECB
BC640	80	1.0	40	150	0.5	500	50	60	10	ECB
BC639	60	1.0	40	150	0.5	500	50	60	10	ECB
BC636	45	1.0	40	150	0.5	500	50	60	10	ECB
EC369	20	1.0	60	1000	0.5	1000	100	65	10	ECB

TABLE 11-TELECOM TRANSISTORS (TO92)

These devices are special product ranges intended for use in Telecom application which require an excellent long term reliability.

NPN DEVICES	PNP DEVICES	BVCEO V	PDmW 25°C Amb	IC (mA) Cont	HFE				FT TYP MHz	PIN OUT
					min	max	IC (mA)	VCE (V)		
BC337-25	BC327-25	45	625	800	160	400	100	1	210	CBE
P2N2222		30	625	600	75	–	10	10	250	CBE
P2N2222A		40	625	600	75	–	10	10	250	CBE
	P2N2907	40	625	600	100	–	10	10	200	CBE
	P2N2907A	60	625	600	75	–	10	10	200	CBE
PBF259,S		300	625	500	60	–	20	10	50	EBC
	PBF493,S	300	625	500	40	–	10	10	50	EBC

Introducing...

...MOTOROLA TO92 - 1 WATT PACKAGE

The TO92 1 Watt package combines all the advantages of standard TO92 allowing more power dissipation in free air.

Motorola offers a very large range of products and 2 standard pin out options.

EXCELLENT PERFORMANCE

- 1 watt free air;
- current handling IC max up to 1.5 A continuous and 2.0 A IC peak.

TWO VERSIONS

- European version: pro-electron numbers BDB and BDC series.
  BDB means: central base;
  BDC means: central collector.
- U.S. version: all US standard Motorola 1 watt types have a common alpha prefix: 'MPSW', i.e. 'Motorola plastic signal 1 watt', a numeric designation which corresponds to the device type already existing.

Medium Current

EUROPEAN VERSION

PIN OUT		PNP/ NPN	BVCEO	ICBO		HFE				VCEsat			F_T	
ECB	EBC			max (nA)	VCB	min	max	IC (mA)	VCE (V)	maxV	IC mA	IB (mA)	minMHz	IC (mA)
BDC01A BDC02A	BDB01A BDB02A	N P	45V	100	45	40	400	100	1	0.7	1000	100	50	200
BDC01B BDC02B	BDB01B BDB02B	N P	60V	100	60	40	400	100	1	0.7	1000	100	50	200
BDC01C BDC02C	BDB01C BDB02C	N P	80V	100	80	40	400	100	1	0.7	1000	100	50	200
BDC01D BDC02D	BDB01D BDB02D	N P	100V	100	100	40	400	100	1	0.7	1000	100	50	200
	BDB03 BDB04	N P	45V	100	45	100	300	150	10	1.1	150	15	150	15
US VERSION														
DEVICE	**PIN OUT**													
MPSW05	EBC	N	60V	100	40	80	–	50	1	0.4	250	10	50	200
MPSW55	EBC	P	60V	100	40	80	–	50	1	0.5	250	10	50	250
MPSW06	EBC	N	80V	100	60	80	–	50	1	0.4	250	10	50	200
MPSW56	EBC	P	80V	100	60	80	–	50	1	0.5	250	10	50	250
MPSW07*	EBC	N	100V	–	–	–	–	–	–	–	–	–	–	–
MPSW57*	EBC	P	100V	–	–	–	–	–	–	–	–	–	–	–

* in development

High-Voltage

EUROPEAN VERSION

DEVICE	PIN OUT	POLA	BVCEO (V)	ICBO		HFE				VCEsat			FT	
				max (nA)	VCB	min	max	VCE (V)	IC (mA)	max (V)	IC (mA)	IB (mA)	min MHz	IC(mA)
BDC05	ECB	N	300	10	200	40	–	20	25	2	20	2	60	10
BDC06	ECB	P	300	10	200	40	–	20	25	2	20	2	60	10
BDC07	ECB	N	250	10	200	50	–	20	25	2	20	2	60	10
BDC08	ECB	P	250	10	200	50	–	20	25	2	20	2	60	10
US VERSION														
DEVICE	**PIN OUT**													
MPSW42	EBC	N	300	100	200	40	–	10	30	0.5	20	2	50	10
MPSW92	EBC	P	300	250	200	25	–	10	30	0.5	20	2	50	10
MPSW43	EBC	N	200	100	200	50	200	10	30	0.4	20	2	50	10
MPSW93	EBC	P	200	250	160	30	160	10	30	0.4	20	2	50	10
MPSW10	EBC	N	300	200	200	40	–	10	30	0.75	30	3	45	10
MPSW60	EBC	P	200	200	200	30	–	10	30	0.75	20	2	60	10

Darlington

US VERSION

DEVICE	PIN OUT	POLA	BVCEO (V)	ICBO		HFE				VCEsat			FT	
				max (nA)	VCB	min	max	IC (ma)	VCE (V)	max (V)	IC (mA)	IB (mA)	min MHz	IC (mA)
MPSW13	B	N	30	100	30	10K	–	100	5	1.5	100	0.1	125	10
MPSW63	B	P												
MPSW14	B	N	30	100	30	20K	–	100	5	1.5	100	0.1	125	10
MPSW64	B	P												
MPSW45	B	N	40	100	30	25K	150	200	5	1.5	1000	2	100	200
MPSW45A	B	N	50	100	30	15K	–	500	5	1.5	1000	2	100	200

High-Current

EUROPEAN VERSION

DEVICE	PIN OUT	POLA	BVCEO	ICBO		HFE				VCEsat			F_T	
				max (nA)	VCB	min	max	IC (mA)	VCE (V)	max (V)	IC (mA)	IB (mA)	min MHz	IC(mA)
BDC03	ECB	N	20	100	25	60	–	1000	1	0.5	1000	100	50	50
BDC04	ECB	P	20	100	25	60	–	1000	1	0.7	1000	100	50	50
US VERSION														
DEVICE	**PIN OUT**													
MPSW01	EBC	N	30	100	30	50	–	1000	1	0.5	1000	100	50	50
MPSW51	EBC	P	30	100	30	50	–	1000	1	0.7	1000	100	50	50
MPSW01A	EBC	N	40	100	40	50	–	1000	1	0.5	1000	100	50	50
MPSW51A	EBC	P	40	100	40	50	–	1000	1	0.7	1000	100	50	50

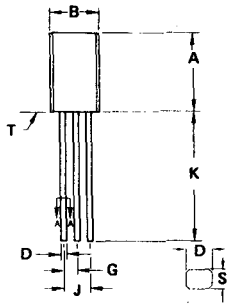

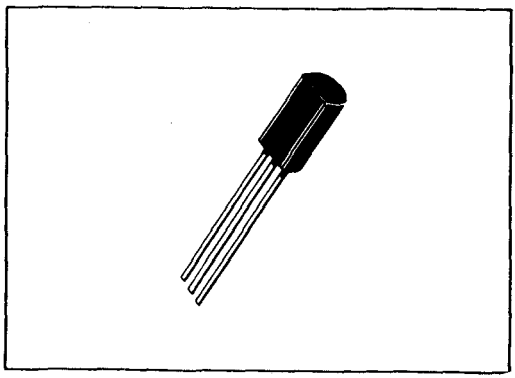

NOTES:
1. DIMENSIONS -A- AND -B- ARE DATUMS.
2. -T- IS SEATING PLANE.
3. POSITIONAL TOLERANCE FOR LEADS:
   ⌖ ø 0.10 (0.004) Ⓜ T A Ⓜ B Ⓜ
4. DIMENSIONING AND TOLERANCING PER ANSI Y14.5, 1973.

DIM	MILLIMETERS MIN	MILLIMETERS MAX	INCHES MIN	INCHES MAX
A	7.37	7.87	0.290	0.310
B	4.44	5.21	0.175	0.205
C	3.18	4.19	0.125	0.165
D	0.46	0.61	0.018	0.024
G	1.27 BSC		0.050 BSC	
J	2.54 BSC		0.100 BSC	
K	12.70	–	0.500	–
N	2.03	2.92	0.080	0.115
R	3.43	–	0.135	–
S	0.46	0.61	0.018	0.024

CASE 29-03

Micro-T Transistors

Micro-T devices combine high performance with extremely small physical size. The devices shown in these tables are available from stock; all other Motorola small-signal transistors may be obtained in Micro-T packages on special order.

GENERAL-PURPOSE AND SWITCHING TRANSISTORS

For general-purpose applications and for designs requiring fast switching. Complete data sheets are available for prime devices; equivalent data sheets may be obtained when the same die is used in other 2N—standard devices. For devices not listed, contact your nearest Motorola representative or distributor. Ceramic packages with a cold sealing process are also available on demand.

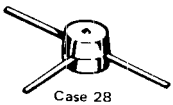

Case 28

		NPN Types		PNP Type
Prime Devices	MMT2222	MMT3904	MMT2369	MMT2907
Design Parameters				
BV_{CEO}	To 60 V	To 40 V	To 15 V	To 60 V
Operating h_{FE} Range	100 μA to 500 mA	100 μA to 100 mA	10 mA to 100 mA	100 μA to 500 mA
f_T (Typ)	300 MHz 20 mA	300 MHz 10 mA	650 MHz 10 mA	350 MHz 50 mA
t_{on} (Typ)	25 ns 150 mA	40 ns 10 mA	2.0 ns 10 mA	30 ns 150 mA
t_{off} (Typ)	250 ns	140 ns	15 ns	100 ns

RF AMPLIFIER

Standard RF devices in Micro-T packages are designed for applications where limited space is critical. This package is particularly attractive from a pre-testing and cost point of view as the RF parameters can be 100% tested for high performance. For complete design data, consult the prime device data sheet. For other RF devices not listed, contact your nearest Motorola sales representative of distributor. Ceramic packages with a cold sealing process are also available on demand.

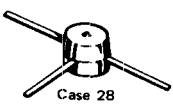

Case 28

	NPN Type
Prime Device	MMT918
Design Parameters	
BV_{CEO}	15 V
Operating h_{FE} Range	3.0 mA
f_T (Typ)	600 MHz 4.0 mA
NF (Typ)	6.0 dB 1.0 mA
G_{pe} (Typ)	15 dB 200 MHz
t_{on} (Typ)	

Multiple Devices

Small-Signal Multiple Transistors

The trend in electronic system is towards the use of integrated circuits—to reduce component cost and equipment cost, but IC's still aren't all things to all people and for these circuit designs where IC's are not available, there is a noticeable swing towards the use of multiple devices. *

Motorola is reaching to this expanding market requirement by making available a very large selection of Quad, Dual and Darlington Transistors for off-the-shelf delivery. The chips used in the Quad and Dual Transistors are those that have emerged as the most popular ones for either computer, communications or home electronics applications. But even beyond that, Motorola offers its entire vast repertoire of discrete Small-Signal Transistors for multiple device packaging. For special applications where the quick selecting list may not quite fit the design requirements, special configurations can be supplied with quick turn-around time and low premiums.

* Multiple devices, as described here encompass two or more bipolar transistor chips in a single package.

KEY TABLE

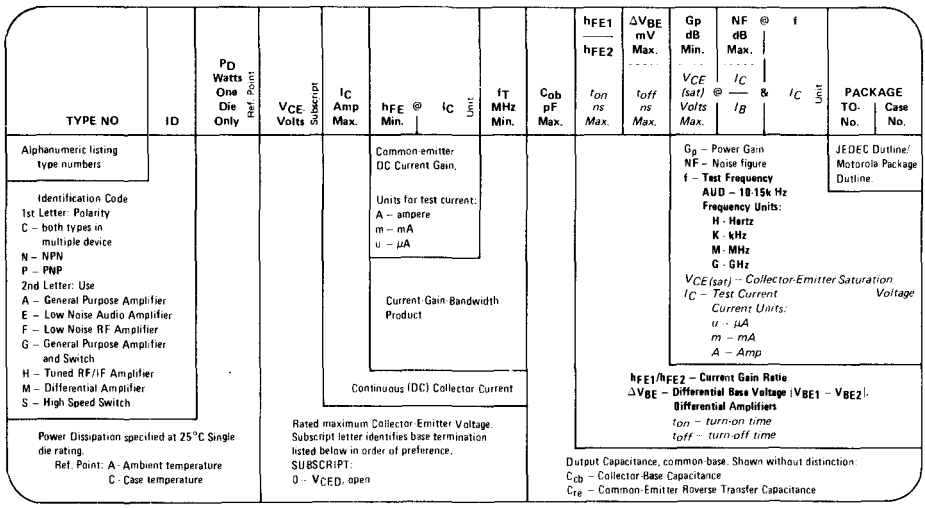

CASE 607-04
(Ceramic Flat Package)
MQ Devices

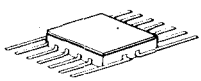

CASE 632 (TO-116)
Ceramic Package
MHQ Devices

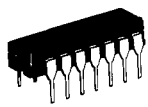

CASE 646
Plastic Package
MPQ Devices

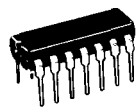

Quad Transistors

TYPE NO.	ID	P_D Watts One Die Only	V_{CE} Volts	I_C Amp Max	h_{FE} Min	I_C	f_T MHz Min Typ*	C_{ob} oF Max Typ*	h_{FE1} / h_{FE2} t_{on} ns Max Typ*	V_{BE} mV Max t_{off} ns Max Typ*	Gp dB Min V_{CE} (sat) Volts Max	NF dB Max I_C / I_B	f & I_C	PACKAGE TO No.	PACKAGE Case No.
MHQ2222	NG	0.65 A	40 0	0.5	100	150 m	200	8.0	25*	250*	4	10	150 m	116	632
MHQ2369	NS	0.5 A	15 0	0.5	40	10 m	450	4.0	9.0*	15*	25	10	10 m	116	632
MHQ2484	NA	0.6 A	40 0	0.05	300	1.0 m	50					2*	AUD	116	632
MHQ2907	PG	0.65 A	40 0	0.6	100	150 m	200	8.0	30*	100*	4	10	150 m	116	632
MHQ3467	PS	0.9 A	40 0	1.0	20	500 m	125	25	40	90	5	10	500 m	116	632
MHQ3546	PS	0.5 A	12 0	0.2	30	10 m	600	6.0	15*	25*	25	10	10 m	116	632
MHQ4002A	NS	0.75 A	45 0	1.5	30	500 m	200	10	40	75	52	10	500 m	116	632
MHQ4014	NS	0.75 A	45 0	1.5	35	500 m	200	10	35	60	52	10	500 m	116	632
MHQ6002	CA	0.65 A	30 0	0.5	100	150 m	200	8.0	30*	225*	4	10	150 m	116	632
MPQ2221	NA	0.65 A	40 0	0.5	40	150 m	200	8.0	25*	250*	4	10	150 m		646
MPQ2222	NA	0.65 A	40 0	0.5	100	150 m	200	8.0	25*	250*	4	10	150 m		646
MPQ2369	NS	0.5 A	15 0	0.5	40	10 m	450	4.0	9.0*	15*	25	10	10 m		646
MPQ2483	NA	0.625 A	40 0	0.05	150	1.0 m	50					3*	AUD		646
MPQ2484	NA	0.625 A	40 0	0.05	300	1.0 m	50					2*	AUD		646
MPQ2906	PA	0.65 A	40 0	0.6	40	150 m	200	8.0	30*	100*	4	10	150 m		646
MPQ2907	PA	0.65 A	40 0	0.6	100	150 m	200	8.0	30*	100*	4	10	150 m		646
MPQ3467	PS	0.75 A	40 0	1.0	20	500 m	125	25	40	90	0.5	10	500 m		646
MPQ3546	PA	0.5 A	12 0	0.2	30	10 m	600	6.0	15*	25*	25	10	10 m		646
MPQ3725	NS	1.0 A	40 0	1.0	25	500 m	250	10	35	60	45	10	500 m		646
MPQ3725A	NS	1.0 A	50 0	1.0	30	500 m	200	10	3.5	60	45		500 m		646
MPQ3762	PS	0.75 A	40 0	1.5	35	150 m	150	15	50	120	55	10	500 m		646
MPQ3799	PA	0.625 A	60 0	0.05	300	0.1 m	60	4.0				2*	AUD		646
MPQ3904	NG	0.50 A	40 0	0.2	75	10 m	250	4.0	37*	136*	0.2	10	10 m		646
MPQ3906	PG	0.50 A	40 0	0.2	75	10 m	200	4.5	43*	155*	25	10	10 m		646
MPQ6001	CG	0.65 A	30 0	0.5	40	150 m	200	8.0	30*	225*	0.4	10	150 m		646
MPQ6002	CG	0.65 A	30 0	0.5	100	150 m	200	8.0	30*	225*	0.4	10	150 m		646
MPQ6842	CA	0.75 A	40 0	0.5	70	10 m	300	4.5	45	150	0.15	10	0.5 m		646
MPQ7043	NA	0.75 A	250 0	0.5	25	1.0 m	50	5.0			0.5	10	20 m		646
MPQ7053	CA	0.75 A	250 0	0.5	25	1.0 m	50	5.0			0.7	10	20 m		646
MPQ7093	PA	0.75 A	250 0	0.5	35	10 m	50	5.0			0.5	10	20 m		646
MQ2219A	NA	0.4 A	30 0	0.5	100	150 m	200	8.0			0.3	10	150 m		607
MQ2905A	PG	0.4 A	60 0	0.6	100	150 m	300	8.0	42	130	4	10	150 m		607
MQ3725	NS	0.40 A	40 0	1.0	50	100 m	200	10	45	75	26	10	100 m		607
MQ3762	PS	0.40 A	40 0	1.5	20	1.0 A	150	20	40	110	1.0	10	1.0 A		607
MQ6002	CG	0.40 A	30 0	0.5	100	150 m	200	8.0	60	350	0.4	10	150 m		607
2N5146	PA	0.4 A	40 0	1.5	20	1.0 A	150	20	40	110	1.0	10	1.0 A		607

Some columns show 2 different types of data indicated by either bold *or italic typefaces. See key and headings.*

19

Dual Transistors

TYPE NO.	ID	P_D Watts One Die Only	V_{CE} Volts	I_C Amp Max	h_{FE} Min	I_C	f_T MHz Min Typ*	C_{ob} oF *Max* Typ*	h_{FE1} / h_{FE2} *t_{on} ns Max Typ**	V_{BE} mV Max *t_{off} ns Max Typ**	G_p dB Min *V_{CE} (sat) Volts Max*	NF dB Max *I_C / I_B*	f *& I_C*	PACKAGE TD No.	Case No.
BFX11	PM	0.4 A	45 O	0.05	80	50 m	130	8.0	0.8	5.0	0.25	20	50 m	78	654
BFX15	NM	0.5 A	40 O	0.5	60	100 u	50	15	0.9	5.0	1.0	10	1.0 m	78	654
BFX36	PM	0.4 A	60 O	0.05	100	10 u	40	6.0	0.9	3.0	0.25	20	10 m	78	654
BFY81	NM	0.4 A	45 O	0.03	100	100 u	60	6.0	0.8	10	0.35	10	1.0 m	78	654
MD918	NF	0.55 A	15 O	0.05	50	3.0 m	600	1.7				6.0	60 M	78	654
MD918A	NM	0.55 A	15 O	0.05	50	3.0 m	600	1.7	0.9	5.0		6.0	60 M	78	654
MD918AF	NM	0.35 A	15 O	0.05	50	3.0 m	600	1.7	0.9	5.0		6.0	60 M	89	610A
MD2219A	NG	0.575 A	30 O	0.5	100	150 m	200	8.0	*45*	*310*	*0.3*	*10*	*150 m*	78	654
MD2219F	NG	0.350 A	30 O	0.5	100	150 m	200	8.0	*60*	*350*	*0.4*	*10*	*150 m*	89	610A
MD2369	NS	0.55 A	15 O	0.5	40	10 m	500	4.0	*15*	*20*	*25*	*10*	*10 m*	78	654
MD2369AF	NM	0.35 A	15 O	0.5	40	10 m	500	4.0	0.9	5.0	*25*	*10*	*10 m*	89	610A
MD2905A	PG	0.575 A	60 O	0.6	100	150 m	200	8.0	*45*	*130*	*0.4*	*10*	*150 m*	78	654
MD2905AF	PG	0.35 A	60 O	0.6	100	150 m	200	8.0	*45*	*130*	*0.4*	*10*	*150 m*	89	610A
MD3251A	PM	0.575 A	40 O	0.20	100	1.0 m	250	6.0	0.9	5.0	*25*	*10*	*10 m*	78	654
MD3725	NS	0.60 A	40 O	1.0	50	100 m	200	10	*45*	*75*	*26*	*10*	*100 m*	78	654
MD3762	PS	0.60 A	40 D	1.5	20	1.0 A	150	20	*40*	*110*	*1.0*	*10*	*1.0 A*	78	654
MD5000	PH	0.3 A	15 O	0.05	20	3.0 m	600	1.7			15		200 M	78	654
MD6003	CA	0.575 A	30 O	0.5	70	150 m	200	8.0			*0.4*	*10*	*150 m*	78	654
MD7000	NA	0.575 A	30 O	0.5	70	150 m	200	8.0			*0.4*	*10*	*150 m*	78	654
MD7001	PA	0.6 A	30 O	0.6	70	150 m	200	8.0			*0.4*	*10*	*150 m*	78	654
MD7002	NA	0.575 A	40 O	0.03	40	100 u	200	6.0			*35*	*10*	*10 m*	78	654
MD7002A	NM	0.575 A	40 O	0.03	40	100 u	200	6.0	0.75	25	*35*	*10*	*10 m*	78	654
MD7003	PA	0.55 A	40 O	0.05	50	10 m	200	6.0			35	10	1.0 m	78	654
MD7021	CG	0.55 A	40 O	0.05	50	10 m	200	6.0	*28**	*72**	*35*	*10*	*10 m*	78	654
MD8003	NM	0.575 A	40 O	0.03	100	1.0 m	260*	2.6*		15				78	654
2N2060	NM	0.5 A	60 O	0.5	30	100 u	60	15	0.9	5.0		8.0	1000 H	78	654
2N2060A	NM	0.5 A	60 O	0.5	30	100 u	60	15	0.9	3.0	*0.6*	*10*	*50 m*	78	654
2N2223	NM	0.5 A	60 O	0.5	25	100 u	50	15	0.8	15	*1.2*	*10*	*50 m*	78	654
2N2223A	NM	0.5 A	60 O	0.5	25	100 u	50	15	0.9	5.0	*1.2*	*10*	*50 m*	78	654
2N2453A	NM	0.5 A	50 O	0.05	80	10 u	60	8.0	0.9	3.0		4.0	1000 H	78	654
2N2642	NM	0.3 A	45 O	0.03	100	10 u	80	8.0	0.9	5.0		4.0	AUD	78	654
2N2652A	NM	0.3 A	60 O	0.5	50	1.0 m	60	15	0.9	3.0		8.0	1000 H	78	654
2N2903A	NM	0.6 C	30 O	0.05	125	1.0 m	60	8.0	0.9	5.0		7.0	1000 H	78	654
2N2913	NE	0.3 A	45 O	0.03	60	10 u	60	6.0				4.0	AUD	78	654
2N2914	NE	0.3 A	45 O	0.03	150	10 u	60	6.0				3.0	AUD	78	654
2N2915	NM	0.3 A	45 O	0.03	60	10 u	60	6.0	0.9	5.0		4.0	AUD	78	654
2N2916	NM	0.3 A	45 O	0.03	150	10 u	60	6.0	0.9	5.0		3.0	AUD	78	654
2N2917	NM	0.3 A	45 O	0.03	60	10 u	60	6.0	0.8	10		4.0	AUD	78	654
2N2918	NM	0.3 A	45 D	0.03	150	10 u	60	6.0	0.8	10		3.0	AUD	78	654
2N2919	NM	0.3 A	60 D	0.03	60	10 u	60	6.0	0.9	5.0		4.0	AUD	78	654
2N2920	NM	0.3 A	60 D	0.03	150	10 u	60	6.0	0.9	5.0		3.0	AUD	78	654
2N3D45	NE	0.25 A	45 D	0.03	100	10 u	30	8.0				5.0	AUD	89	610A
2N3726	PE	0.4 A	45 O	0.3	135	1.0 m	200	8.0	0.9	5.0		4.0	1000 H	78	654
2N3806	PE	0.5 A	60 O	0.05	150	0.1 m	100	4.0				7.0	100 H	78	654
2N3807	PE	0.5 A	60 O	0.05	300	0.1 m	100	4.0				4.0	100 H	78	654
2N3810	PM	0.5 A	60 O	0.05	150	0.1 m	100	4.0	0.9	3.0		7.0	100 H	78	654
2N3811	PM	0.5 A	60 D	0.05	300	0.1 m	100	4.0	0.9	3.0		4.0	100 H	78	654
2N3811A	PM	0.5 A	60 O	0.05	300	0.1 m	100	4.0	0.95	1.5		1.5	100 H	78	654
2N3817	PM	0.25 A	60 D	0.05	300	0.1 m	100	4.0	0.9	3.0		4.0	100 H	89	610A
2N4016	PM	0.4 A	60 O	0.3	135	1.0 m	200	8.0	0.9	2.5		4.0	1000 H	78	654
2N4854	CE	0.3 A	40 O	0.6	100	150 m	200	8.0	*60*	*350*		8.0	1000 H	78	654
2N4937	PM	0.6 A	40 O	0.05	50	1.0 m	300	5.0	0.9	3.0		4.0	AUD	78	654
2N5794	NG	0.5 A	40 O	0.6	100	150 m	200	8.0	*45*	*310*	*0.3*	*10*	*150 m*	78	654
2N5796	PG	0.5 A	60 O	0.6	100	150 m	200	8.0	*47*	*140*	*0.4*	*10*	*150 m*	78	654
2N6502	NS	0.6 A	40 O	1.0	50	100 m	250	10	*35*	*60*	*0.3*	*10*	*100 m*	78	654

Some columns show 2 different types of data indicated by either bold *or italic typefaces. See key and headings.*

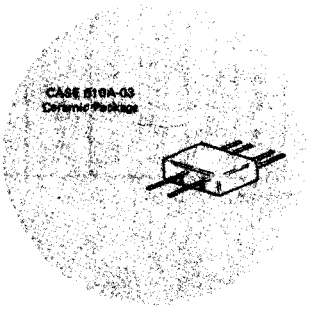

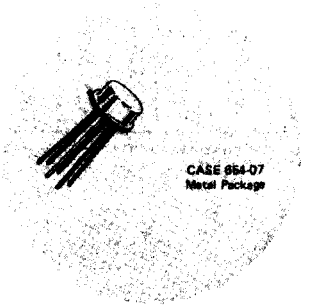

·ield-Effect Transistors (FET's)

lotorola offers a line of Field-Effect Transistors that encompasses the latest ɜchnologies and covers the full range of FET applications, included a wide va-ety of junction FET's, MOS FET's and TMOS in packages option from low cost lastic to metal can.

low to use these selection tables:

'he selector guides on the following pages are designed to emphasize the ›referred FET devices.

Junction FET's—P Channel

TO-92

PREFERRED TYPE	PIN OUT	V(BR)GSS (V) Min	YFS (mmhos)		IDSS (mA) at 15V		VGS (off) at ID (V)		
			Min	Max	Min	Max	Min	Max	
2N5460	DSG	40	1.0	4.0	1.0	5.0	0.75	6.0	1μA
2N5461	DSG	40	1.5	5.0	2.0	9.0	1.0	7.5	1μA
2N5462	DSG	40	2.0	6.0	4.0	16.0	1.8	9.0	1μA
2N5463	DSG	60	1.0	4.0	1.0	5.0	0.75	6.0	1μA
2N5464	DSG	60	1.5	5.0	2.0	9.0	1.0	7.5	1μA
2N5465	DSG	60	2.0	6.0	4.0	16.0	1.8	9.0	1μA
MPF970	DSG	30		100*	15.0	60.0	5.0	12.0	10nA
MPF971	DSG	30		250*	2.0	30.0	1.0	–	10nA

* Rds (on) at VGS = O/ID = O/1 KHz

METAL CAN

PREFERRED TYPE	PACK.	V (BR) GSS (V)	Rds (on) (ohms) Max	Ciss (pF) Max	Crss (pF) Max	IDSS (mA)		VGS (off) (V) at ID			YFS (mmhos)	
						Min	Max	Min	Max		Min	Max
2N5265	TO72	60	–	7	2	0.5	1.0	–	3.0	1μA	0.9	2.7
2N5266	TO72	60	–	7	2	0.8	1.6	–	3.0	1μA	1.0	3.0
2N5267	TO72	60	–	7	2	1.5	3.0	–	6.0	1μA	1.5	3.5
2N5268	TO72	60	–	7	2	2.5	5.0	–	6.0	1μA	2.0	4.0
2N5269	TO72	60	–	7	2	4.0	8.0	–	8.0	1μA	2.2	4.5
2N5270	TO72	60	–	7	2	7.0	14.0	–	8.0	1μA	2.5	5.0
2N5471	TO72	40	–	5	1	0.02	0.06	0.5	3.0	2μA	60	180
2N5472	TO72	40	–	5	1	0.05	0.12	0.7	3.5	5μA	* 90	*225
2N5473	TO72	40	–	5	1	0.16	0.25	0.9	4.3	10μA	*120	*300
2N5474	TO72	40	–	5	1	0.2	0.50	1.2	6.0	20μA	*160	*400
2N5475	TO72	40	–	5	1	0.4	1.0	1.5	7.5	40μA	*200	*500
2N5476	TO72	40	–	5	1	0.8	2.0	2.0	8.0	80μA	*260	*650
2N3993	TO72	25	150	16	4.5	1.0	–	4.0	9.5	1μA	6	12
2N3994	TO72	25	300	16	5	2	–	1.0	5.5	1μA	4	40

* Micromhos

Junction FET's–N Channel

TO-92

PREFERRED TYPE	PIN OUT	V(BR)GSS (V) Min	YFS (mmhos)		IDSS (mA) at 15V		VGS (off) at ID (V)		
			Min	Max	Min	Max	Min	Max	(mA)
BC264A	GSD	30	2.5	–	2.0	4.5	0.5	8.0	1.0
BC264B	GSD	30	3.0	–	3.5	6.5	0.5	8.0	1.5
BC264C	GSD	30	3.5	–	5.0	8.0	0.5	8.0	2.5
BC264D	GSD	30	4.0	–	7.0	12.0	0.5	8.0	3.5
BF244A/245A	SGD/GSD	30	3.0	6.5	2.0	6.5	0.4	2.2	0.2
BF244B/245B	SGD/GSD	30	3.0	6.5	6.0	15.0	1.6	3.8	0.2
BF244C/245C	SGD/GSD	30	3.0	6.5	12.0	25.0	3.2	7.5	0.2
BF256A	GSD	30	4.5	–	3.0	7.0	0.5	7.5	0.2
BF256B	GSD	30	4.5	–	6.0	13.0	0.5	7.5	0.2
BF256C	GSD	30	4.5	–	11.0	18.0	0.5	7.5	0.2
BF246A/247A	SGD/DSG	25	8.0	–	30.0	80.0	1.5	4.0	0.2
BF246B/247B	SGD/DSG	25	8.0	–	60.0	140.0	3.0	7.0	0.2
BF246C/247C	SGD/DSG	25	8.0	–	110.0	250.0	5.5	12.0	0.2
2N5457	DSG	25	1.0	5.0	1.0	5.0	0.5	6.0	10mA
2N5458	DSG	25	1.5	5.5	2.0	9.0	1.0	7.0	10mA
2N5459	DSG	25	2.0	6.0	4.0	16.0	2.0	8.0	10mA
2N5484	DSG	25	3.0	6.0	1.0	5.0	0.3	3.0	10mA
2N5485	DSG	25	3.5	7.0	4.0	10.0	0.4	4.0	10mA
2N5486	DSG	25	4.0	8.0	8.0	20.0	2.0	6.0	10mA
J308	DSG	25	8.0	20.0	8.0	20.0	1.0	6.5	1mA
J309	DSG	25	10.0	20.0	12.0	30.0	1.0	4.0	1mA
J310	DSG	25	8.0	18.0	24.0	60.0	2.0	6.5	1mA

METAL CAN TO18 TO52 TO72

PREFERRED TYPE	PACK.	V (BR) GSS (V) Min	Rds (on) (ohms) Max	Ciss (pF) Max	Crss (pF) Max	IDSS (mA)		VGS (off) (V) at ID			YFS (mmhos)	
						Min	Max	Min	Max	(mA)	Min	Max
2N4091	TO18	40	30	16.0	5.0	30.0	–	5.0	10.0	1mA	–	–
2N4092	TO18	40	50	16.0	5.0	15.0	–	2.0	7.0	1mA	–	–
2N4093	TO18	40	80	16.0	5.0	8.0	–	1.0	5.0	1mA	–	–
2N4391	TO18	40	30	14.0	3.5	50.0	150	4.0	10.0	1mA	–	–
2N4392	TO18	40	60	14.0	3.5	25.0	75	2.0	5.0	1mA	–	–
2N4393	TO18	40	100	14.0	3.5	5.0	30	0.5	3.0	1mA	–	–
U308	TO52	25	–	–	*2.5	12.0	60	1.0	6.0	1mA	X10	X20
U309	TO52	25	–	–	*2.5	12.0	30	1.0	4.0	1mA	X10	X20
U310	TO52	25	–	–	*2.5	24.0	60	2.5	6.0	1mA	X10	X18
2N4220	TO72	30	–	6.0	2.0	0.5	3.0	–	4.0	0.1mA	1.0	4.0
2N4221	TO72	30	–	6.0	2.0	2.0	6.0	–	6.0	0.1mA	2.0	5.0
2N4222	TO72	30	–	6.0	2.0	5.0	15	–	8.0	0.1mA	2.5	6.0
2N4416	TO72	30	–	4.0	0.8	5.0	15	–	6.0	1mA	4.5	7.5

X Common Gate Forward Transconductance

* CGD Gate Drain Capacitance

MOS FET's N Channel

SINGLE GATE

PREFERREO TYPE	MODE	PACK	YFS (mmhos)		TEST FREQUENCY MHz	GC Gps (dB) Min	CRSS (pF) Max	NF (dB) Max	V (BR) GSS (V) Min
			Min	Max					
3N169	ENH	TO72		*200	–	–	1.3	–	35
3N170	ENH	TO72		*200	–	–	1.3	–	35
3N771	ENH	TO72		*200	–	–	1.3	–	35
3N128	OEP	TO72	**5	**12	200	13.5	0.28	5.0	50

* Rds (ohnms) ** μmhos

DUAL GATE

PREFERREO TYPE	MODE	PACK	YFS (mmhos)		TEST FREQUENCY MHz	GC Gps (dB) Min	CRSS (pF) Max	NF (dB) Max	V (BR) GSS (V) Min
			Min	Max					
MFE521	ENH	TO72	10	20	200	21	0.02	3.5	10/12
3N201	OEP	TO72	8	20	200	15	0.03	4.5	6
3N202	OEP	TO72	8	20	200	15	0.03	–	6
3N203	DEP	TO72	7	15	200	15	0.03	6	6
3N211	OEP	TO72	17	40	200	24	0.05	3.5	6
3N212	DEP	TO72	17	40	200	29	0.05	3.5	6
3N213	OEP	TO72	15	35	200	27	0.05	3.5	6
BF900	DEP	TO50	14	–	200	20	0.025	2	6
BF961	OEP	TO50	14	–	200	22	0.025	2	6

MOS FET's P Channel

SINGLE GATE

PREFERRED TYPE	MODE	PACK	YFS (mmhos)		Rds (on) (ohms) Max	IGSS (pA) Max	CRSS (pF) Max	CISS (pF) Max	V (BR) GSS (V) Min
			Min	Max					
3N155	ENH	TO72	1.0	4.0	500	10	1.3	3	50
3N156	ENH	TO72	1.0	4.0	500	10	1.3	3	50
3N157	ENH	TO72	1.0	4.0	–	10	1.3	3	50
3N158	ENH	TO72	1.0	4.0	–	10	1.3	3	50
MFE823	ENH	TO18	1.0	–	–	1	1.5	6	25

INTRODUCING...

...Motorola Small-Signal TMOS FET's
N Channel

These TMOS FET's are designed for high-voltage (200 V) or high-current (2 A) applications such as line drivers, relay drivers, CMOS logic, microprocessor or TTL to high-voltage or high-current interface.

PACKAGE	PREFERRED TYPE	BVDSS (V) Min	ID (A) Max	Rds (on) Max	at ID	VGS (th) (V) Min	Max
TO39	MFE990	90	2	4	2A	1.0	3.5
TO39	MFE960	60	2	3.5	2A	1.0	3.5
TO39	MFE930	35	2	3	2A	1.0	3.5
TO18	MFE9200	200	.4	6.4	250	1.0	4.0
*TO92	BS107	200	.250	14	200	1.0	3.0
*TO92	BS107A	200	.250	6.4	250	1.0	3.0
*TO92	BS170	60	.5	5	200	0.8	3.0
*TO92 1W	MPF990	90	2	2	1A	1.0	3.5
*TO92 1W	MPF960	60	2	1.7	1A	1.0	3.5
*TO92 1W	MPF930	35	2	1.4	1A	1.0	3.5

* To be introduced

RF Transistors and Modules

Motorola's RF product range includes power transistors for operation from 2 MHz to 2 GHz, microwave power transistors that include 2.0 GHz CW devices with power outputs to 16 W and pulsed output to 325 W, small-signal transistors with f_T values to 6 GHz, linear hybrid amplifier modules for CATV and general-purpose applications, and hybrid power amplifier modules for VHF and UHF FM communications equipment.

Table of Contents

Page

RF Power Transistors and Modules
- Low-Voltage RF Power Transistors and Modules 20- 2
- High-Voltage RF Power Transistors 20- 8

Microwave Power Transistors 20-10

Small-Signal RF Transistors
- Typical Gain-Bandwidth Product versus Collector Current 20-11
- UHF and Microwave Oscillators 20-12
- Low-Noise Transistors 20-12
- High-Speed Switches 20-13
- CATV, MATV, and Class A Linear Transistors 20-13
- Small-Signal Amplifier Transistor Selection by Package 20-14

Linear Hybrid Amplifier Modules 20-16

High Reliability RF Transistors 20-18

Transistor Complements 20-18

Package Overview 20-18

Low-Voltage RF Power Transistors and Modules

The transistors listed in these tables are specified for operation in RF Power amplifiers and are listed by specific application at a given test frequency. Arrangement within each application group is in the order of increasing output power. Modulation type is given in each application heading. All devices are NPN polarity except where otherwise noted.

Device Type	P_{in} Input Power Watts	P_{out} Output Power Watts	G_{PE} Power Gain dB Min	V_{CC} Supply Voltage Volts	Package
1.5-30 MHz HF/SSB TRANSISTORS Designed for broadband operation, these devices feature emitter ballast resistors and guaranteed Intermodulation Distortion at rated power output. The higher power devices are tested for ruggedness at 30:1 loaded VSWR. Applications include mobile, marine, fixed station, and amateur HF/SSB equipment.					
MRF476	0.1	3.0 PEP	15	12.5	TO-220
2N6367	0.36	9.0 PEP	14	12.5	211-07
MRF475	1.2	12 PEP	10	13.6	TO-220
MRF432*†	0.125	12.5 PEP	20	12.5	211-07
MRF433*	0.125	12.5 PEP	20	12.5	211-07
MRF479	1.5	15 PEP	10	12.5	TO-220
MRF406	1.25	20 PEP	12	12.5	211-07
MRF477	1.25	40 PEP	15	12.5	TO-220
MRF460	2.5	40 PEP	12	12.5	211-11
MRF412	3.5	70 PEP	13	13.6	211-11
MRF412A	3.5	70 PEP	13	13.6	145A-10
MRF421	10	100 PEP	10	12.5	211-08

*PNP/NPN Complements for Complementary Symmetry Amplifier, See EB-32.
†PNP

14-30 MHz, CB/AMATEUR TRANSISTORS These HF, emitter-ballasted transistors are designed for economical, high-volume use in CW, AM and SSB operation.					
MRF8003	0.05	0.5	10	12.5	TO-39
MRF476	0.10	3.0	15	12.5	TO-220
MRF8004	0.35	3.5	10	12.5	TO-39
MRF475	0.40	4.0	10	13.6	TO-220
MRF449	1.9	30	12	13.6	211-07
MRF449A	1.9	30	12	13.6	145A-09
MRF450	4.0	50	11	13.6	211-09
MRF450A	4.0	50	11	13.6	145A-09
MRF453	3.0	60	13	12.5	211-11
MRF453A	3.0	60	13	12.5	145A-10
MRF455	3.0	60	13	12.5	211-07
MRF455A	3.0	60	13	12.5	145A-09
MRF458	5.0	80	12	12.5	211-11
MRF458A	5.0	80	12	12.5	145A-10
MRF454	5.0	80	12	12.5	211-11
MRF454A	5.0	80	12	12.5	145A-10

Device Type	P_{in} Input Power Watts	P_{out} Output Power Watts	G_{PE} Power Gain dB Min	V_{CC} Supply Voltage Volts	Package
27-50 MHz, LOW-BAND FM TRANSISTORS For use in the FM "Low-Band," for longer-distance Mobile communications.					
MRF402	0.1	1.0	10	12.5	TO-39
2N5847	0.8	8.0	10	12.5	145A-09
2N5848	3.22	20	8.0	12.5	145A-09
2N5849	7.14	40	7.5	12.5	145A-10
MRF497**	4.0	40	10	12.5	TO-220
MRF492	5.6	70	11	12.5	211-11
MRF492A	5.6	70	11	12.5	145A-10

**Use MRF479 for TO-220 Driver.

66-88 MHz, MIDBAND FM TRANSISTORS
Power output chains up to 25 watts output are obtainable in the international VHF FM "Mid-Band" for which these transistors are optimized.

MRF229*	0.15	1.5	10	12.5	TO-39
MRF230	0.15	1.5	10	12.5	TO-39
MRF231	0.15	3.5	10	12.5	145A-09
MRF232	0.95	7.5	9.0	12.5	145A-09
MRF233	1.5	15	10	12.5	145A-09
MRF234	2.8	25	9.5	12.5	145A-09

156-162 MHz, VHF MARINE RADIO FM TRANSISTORS/MODULES
An option is provided between discrete 2-stage transistor lineups to 40 watts, or a power hybrid module, for VHF Marine use.

MRF237*	0.25	4.0	12	12.5	TO-39
MRF238	3.75	30	9.0	13.6	145A-09
MRF239	3.0	30	10	13.6	145A-09
MRF240	5.0	40	9.0	13.6	145A-09
MHW613	0.3	30	20	12.5	301A-03

*Grounded Emitter TO-39 Package. See EB-29.

Device Type	P_{in} Input Power Watts	P_{out} Output Power Watts	G_{PE} Power Gain dB Min	V_{CC} Supply Voltage Volts	Package
136-174 MHz, HIGH-BAND/VHF FM TRANSISTORS The "workhorse" VHF FM High-Band is served by Motorola with the broadest range of devices and package combinations in the industry.					
MRF604	0.1	1.0	10	12.5	TO-46
2N4427	0.1	1.0	10	12	TO-39
MRF607	0.12	1.75	11.5	12.5	TO-39
2N6255	0.5	3.0	7.8	12.5	TO-39
2N5589	0.44	3.0	8.2	13.6	144B-05
MRF237*	0.25	4.0	12	12.5	TO-39
2N6080	0.25	4.0	12	12.5	145A-09
MRF260	0.5	5.0	10	12.5	TO-220
2N5590	3.0	10	5.2	13.6	145A-09
MRF261	3.0	10	5.2	12.5	TO-220
MRF212	1.25	10	9.0	12.5	145A-09
2N6081	3.5	15	6.3	12.5	145A-09
MRF221	3.5	15	6.3	12.5	211-07
MRF262	3.5	15	6.3	12.5	TO-220
MRF215**	3.0	20	8.2	12.5	316-01
2N5591	9.0	25	4.4	13.6	145A-09
2N6082	6.0	25	6.2	12.5	145A-09
MRF222	6.0	25	6.2	12.5	211-07
2N6083	8.1	30	5.7	12.5	145A-09
MRF223	8.1	30	5.7	12.5	211-07
MRF264	9.1	30	5.2	12.5	TO-220
MRF239	3.0	30	10	13.6	145A-09
2N6084	14.3	40	4.5	12.5	145A-09
MRF224	14.3	40	4.5	12.5	211-07
MRF216**	8.5	40	6.7	12.5	316-01
MRF240	5.0	40	9.0	13.6	145A-09
MRF250	18.0	50	4.4	12.5	211-11
MRF250A	18.0	50	4.4	12.5	145A-10
MRF247**	15	75	7.0	12.5	316-01
MRF245**	18.2	80	6.4	12.5	316-01

*Grounded Emitter TO-39 Package, See EB-29.
**Controlled "Q" Transistor.

Device Type	P_{in} Input Power Watts	P_{out} Output Power Watts	f Frequency MHz	G_P Power Gain dB Min	V_{DC} Supply Voltage Volts	Package
146-174 MHz, HIGH-BAND/VHF FM MODULES Hybrid Power Amplifier Modules offer guaranteed subsystem performance, reduced production testing and simplified field maintenance. Thin-film hybrid construction insures consistent performance and reliability.						
MHW252	0.3	25	144-148	19.2	13.6	301A-03
MHW612	0.2	20	146-174	20	12.5	301A-03
MHW612A	0.2	20	146-174	20	12.5	297-03
MHW613	0.3	30	150-174	20	12.5	301A-03
MHW613A	0.3	30	150-174	20	12.5	297-03

Device Type	P_{in} Input Power Watts	P_{out} Output Power Watts	G_{PE} Power Gain dB Min	V_{CC} Supply Voltage Volts	Package
225 MHz, AMATEUR FM TRANSISTORS Specifically designed and characterized for the 225-MHz band, these devices eliminate the guesswork required when adapting 175 MHz characterized devices to this application.					
MRF207	0.15	1.0	8.2	12.5	TO-39
MRF225	0.18	1.5	9.0	12.5	TO-39
MRF227*	0.13	3.0	13.5	12.5	TO-39
MRF208	0.1	10	10	12.5	145A-09
MRF226	1.6	13	9.0	12.5	145A-09
MRF209	9.1	25	4.4	12.5	145A-09

*Grounded Emitter TO-39 Package. See EB-29.

Device Type	P_{in} Input Power Watts	P_{out} Output Power Watts	G_{PE} Power Gain dB Min	V_{CC} Supply Voltage Volts	Package
407-512 MHz, UHF FM TRANSISTORS Higher power output devices in this UHF power transistor series feature Controlled Q (CQ) internally input-matched construction, are designed for broadband operation, and have guaranteed ruggedness under output mismatch and RF overdrive conditions. Automatically programmed wirebonding of CQ transistors assures consistent, wideband input impedance.					
2N6256	0.10	0.5	7.0	12.5	249-05
MRF626	0.05	0.5	10	12.5	305-01
MRF627	0.05	0.5	10	12.5	305A-01
MRF628	0.05	0.5	10	12.5	249-05
MRF750	0.05	0.5	10	7.5	305A-01
MRF515	0.12	0.75	8.0	12.5	TO-39
MRF554†	0.063	1.0	12	12.5	317-01
2N3948	0.25	1.0	6.0	13.6	TO-39
2N5644	0.20	1.0	7.0	12.5	145A-09
MRF629*	0.32	2.0	8.0	12.5	TO-39
2N5944	0.25	2.0	9.0	12.5	244-04
MRF752	0.4	2.5	8.0	7.5	249-05
2N5945	0.64	4.0	8.0	12.5	244-04
MRF660	2.0	7.0	5.4	12.5	TO-220
MRF754	2.0	8.0	6.0	7.5	249-05
2N5946	2.5	10	6.0	12.5	244-04
MRF641**	3.75	15	7.8	12.5	316-01
MRF644**	5.9	25	6.2	12.5	316-01
MRF646**	13.3	40	4.8	12.5	316-01
MRF648**	22	60	4.4	12.5	316-01
MRF338	15	80	7.3	28	333-01

*Grounded Emitter TO-39 Package. Case 79-02. **Controlled "Q" Transistor. †To be introduced.

Device Type	P_{in} Input Power Watts	P_{out} Output Power Watts	f Frequency MHz	G_P Power Gain dB Min	V_{DC} Supply Voltage Volts	Package
407-512 MHz, UHF FM MODULES UHF Modules reduce costs of assembly, testing, inventory and maintenance, while producing consistent performance free of the critical physical design problems associated with these frequencies. Like their VHF counterparts, their consistency and reliability stem from the use of thin-film gold metallization, laser-trimmed nichrome resistors and MOS capacitors.						
MHW401-1-	0.047	1.5	400–440	15	7.5	301-01
MHW401-2	0.047	1.5	440–470	15	7.5	301-01
MHW401-3	0.047	1.5	470–512	15	7.5	301-01
MHW709-1	0.10	7.5	400–440	18.8	12.5	700-03
MHW709-2	0.10	7.5	440–470	18.8	12.5	700-03
MHW709-3	0.10	7.5	470–512	18.8	12.5	700-03
MHW710-1	0.15	13	400–440	19.4	12.5	700-03
MHW710-2	0.15	13	440–470	19.4	12.5	700-03
MHW710-3	0.15	13	470–512	19.4	12.5	700-03
MHW720-1	0.15	20	400–440	21	12.5	700-03
MHW720-2	0.15	20	440–470	21	12.5	700-03

Device Type	P_{in} Input Power Watts	P_{out} Output Power Watts	G_{PE} Power Gain dB Min	V_{CC} Supply Voltage Volts	Package
806-870 MHz, UHF FM TRANSISTORS Designed specifically for the 800 MHz mobile radio band, types MRF840 through 846 offer superior gain and ruggedness, using the unique CS-12 package, which minimizes common-element impedance, and thus maximizes gain and stability.					
MRF559	0.080	0.50	8.0	12.5	317-01
MRF816	0.075	0.75	10	12.5	249-05
MRF838	0.22	1.0	6.5	12.5	305A-01
MRF838A	0.22	1.0	6.5	12.5	305-01
MRF817	0.59	2.5	6.2	13.6	244-04
MRF870	1.0	3.0	5.0	12.5	305A-01
MRF870A	1.0	3.0	5.0	12.5	305-01
MRF840*	2.5	10	6.0	12.5	319-03
MRF842*	5.0	20	6.0	12.5	319-03
MRF844*	9.0	30	5.2	12.5	319-03
MRF846*	15	40	4.3	12.5	319-03

*Common Base

Device Type	P_{in} Input Power Watts	P_{out} Output Power Watts	f Frequency MHz	G_P Power Gain dB Min	V_{DC} Supply Voltage Volts	Package
806-870 MHz, UHF FM MODULES The cost saving reproducability and packaging density advantages of broadband hybrid amplifier modules become very attractive in the 800 MHz mobile band. Bandwidth, stability and ruggedness are guaranteed together with the long established reliability of thin film hybrid construction.						
MHW808	0.25	7.5	806-870	14.8	12.5	297A-03
MHW820	0.25	20	806-870	19.0	12.5	301B-01

High-Voltage RF Power Transistors

The transistors listed in these tables are specified for operation in RF Power amplifiers and are listed by specific application at a given test frequency. Arrangement within each application group is in the order of increasing output power. Modulation type is given in each application heading. All devices are NPN polarity except where otherwise noted.

Device Type	P_{in} Input Power Watts	P_{out} Output Power Watts	G_{PE} Power Gain dB Min	V_{CC} Supply Voltage Volts	Package
1.5-30 MHz HF/SSB TRANSISTORS These broadband devices offer guaranteed Intermodulation Distortion and ruggedness in military and commercial HF/SSB fixed, mobile and marine transmitters, operating from 28 or 50 volts.					
2N6370	0.62	10 PEP	12	28	211-07
MRF485	1.5	15 PEP	10	28	TO-220
2N5070	1.25	25 PEP	13	28	TO-60
MRF401	1.25	25 PEP	13	28	145A-09
MRF426	0.16	25 PEP	22	28	211-07
MRF426A	0.16	25 PEP	22	28	145A-09
MRF427	0.40	25 PEP	18	50	211-11
MRF427A	0.40	25 PEP	18	50	145A-10
MRF486	1.25	40 PEP	15	28	TO-220
MRF466	1.25	40 PEP	15	28	211-09
MRF464	2.53	80 PEP	15	28	211-11
MRF464A	2.53	80 PEP	15	28	145A-10
MRF422	15	150 PEP	10	28	211-08
MRF428	7.5	150 PEP	13	50	211-08
MRF428A	7.5	150 PEP	13	50	307-01
MRF429	7.5	150 PEP	13	50	211-11

30-200 MHz, VHF AM/FM TRANSISTORS Designed for Military Radio and Commercial Aircraft VHF bands, these 28-volt devices include the all-gold metalized MRF314/15/16/17 high-reliability series.					
2N3866	0.1	1.0	10	28	TO-39
2N3553	0.25	2.5	10	28	TO-39
2N5641	1.0	7.0	8.4	28	144B-05
MRF340	0.4	8.0	13	27	TO-220
2N5642	3.0	20	8.2	28	145A-09
MRF342	1.9	24	11	27	TO-220
MRF314	3.0	30	10	28	211-07
MRF314A	3.0	30	10	28	145A-09
2N5643	6.9	40	7.6	28	145A-09
MRF315	5.7	45	9.0	28	211-07
MRF315A	5.7	45	9.0	28	145A-09
MRF344	15	60	6.0	27	TO-220
MRF316**	8.0	80	10	28	316-01
MRF317**	12.5	100	9.0	28	316-01

**Controlled "Q" Transistor.

Device Type	P_{in} Input Power Watts	P_{out} Output Power Watts	G_{PE} Power Gain dB Min	V_{CC} Supply Voltage Volts	Package
225-400 MHz, UHF AM TRANSISTORS Stringent requirements of the UHF Military band are met by MRF313, 321, 331, 325, 326, 327, 328 and 2N6439 types, with all-gold metal systems, ruggedness, and "CQ" programmed wirebond construction, to assure consistent input impedances.					
MRF525*	0.001	0.02	13	26	TO-39
2N5160†	0.16	1.0	8.0	28	TO-39
2N3866	0.1	1.0	10	28	TO-39
MRF313	0.03	1.0	15	28	305A-01
MRF313A	0.03	1.0	15	28	305-01
MRF5174	0.125	2.0	12	28	244-04
MRF321**	0.62	10	12	28	244-04
MRF331#	1.6	10	8.0	28	244-04
MRF323**	2.0	20	10	28	244-04
MRF5177	7.5	30	6.0	28	215-02
MRF5177A	7.5	30	6.0	28	145A-09
MRF325**	4.3	30	8.5	28	316-01
MRF326**	8.0	40	9.0	28	316-01
MRF309***	10	50	7.0	28	316-01
2N6439	10	60	7.8	28	316-01
MRF327**	14.9	80	7.3	28	316-01
MRF328**	20	100	7.0	28	739-01

*Grounded Emitter TO-39, Case 79-02.
**Controlled "Q" Transistor.
***420-450 MHz Amplifier. See EB-67.
#See EB-74.
†PNP — Complement to 2N3866.

Microwave Power Transistors

Motorola's line of silicon NPN microwave power transistors includes 2.0 GHz CW devices with power outputs to 16 W and pulsed power outputs to 325 W in the 960–1215 MHz avonics band. The products feature compatibility with industry standard types, all gold metallization systems, silicon-nitride passivation and guaranteed ruggedness to withstand load impedance mismatch.

New product development is a continuous investment by Motorola to better serve in microwave power transistors demands; should your application not be satisfied by the devices listed, please contact the local Motorola Sales Office or Distributor with your specific requirement.

Device Type	P_{in} Input Power Watts	P_{out} Output Power Watts	G_{PB} Power Gain dB Min	V_{CC} Supply Voltage Volts	Package
AVONICS PULSED POWER MICROWAVE TRANSISTORS These products are designed to operate in short pulse width, 10 μs, low duty cycle, 1%, power amplifiers operating in the 960 to 1215 MHz band. The prime application is avionics equipment for distance measuring (DME), area navigation (TACAN) and interrogation (IFF).					
MRF1000MA*	0.02	0.20	10	18	332-01
MRF1000MB*	0.02	0.20	10	18	332A-01
MRF1002MA	0.20	2.0	10	35	332-01
MRF1002MB	0.20	2.0	10	35	332A-01
MRF1004MA	0.40	4.0	10	35	332-01
MRF1004MB	0.40	4.0	10	35	332A-01
MRF1008MA	0.80	8.0	10	50	332-01
MRF1008MB	0.80	8.0	10	50	332A-01
MRF1015MA	1.5	15	10	50	332-01
MRF1015MB	1.5	15	10	50	332A-01
MRF1035MA	3.5	35	10	50	332-01
MRF1035MB	3.5	35	10	50	332A-01
MRF1090MA	9.0	90	10	50	332-01
MRF1090MB	9.0	90	10	50	332A-01
MRF1150MA	25	150	7.8	50	332-01
MRF1150MB	25	150	7.8	50	332A-01
MRF1250M	63	250	6.0	50	336-02
MRF1325M	81	325	6.0	50	336-02

*Class A Common Emitter.

1.7–2.3 GHz BROADBAND POWER MICROWAVE TRANSISTORS The MRF2000M Series of transistors have internal input impedance matching networks which facilitate broadband circuit designs in the 1.7 to 2.3 GHz telecommunications band. The devices are designed for Class B and C common base amplifier applications.					
MRF2001M	0.14	1.0	8.5	24	337-02
MRF2003M	0.48	3.0	8.0	24	337-02
MRF2005M	0.89	5.0	7.5	24	337-02
MRF2010M	2.0	10	7.0	24	337-02
MRF2016M	3.6	16	6.5	24	337-02
2 GHz MICROWAVE POWER TRANSISTORS The MRF2000 Series of NPN Silicon microwave power transistors are designed for common base service in amplifier or oscillator applications in the 1.0 to 2.3 GHz frequency range. Construction techniques feature hermetic flange/pill packages and gold metallized, emitter ballasted die for long life and resistance to metal migration.					
MRF2001	0.13	1.0	9.0	28	328A-01
MRF2001B	0.13	1.0	9.0	28	328-01
MRF2003	0.5	3.0	7.8	28	328A-01
MRF2003B	0.5	3.0	7.8	28	328-01
MRF2005	0.8	5.0	8.0	28	328A-01
MRF2005B	0.8	5.0	8.0	28	328-01
MRF2010	2.5	10	6.0	28	328A-01
MRF2010B	2.5	10	6.0	28	328-01

Small-Signal RF Transistors

Motorola small-signal and medium power RF transistors with gain-bandwidth products from 1 GHz to 6 GHz operate with currents from 0.25 mA to over 100 mA. The following chart, combined with the tables of package options, enables the circuit designer to select the optimum device from Motorola's wide range of transistor/package combinations.

Typical Gain-Bandwidth Product versus Collector Current

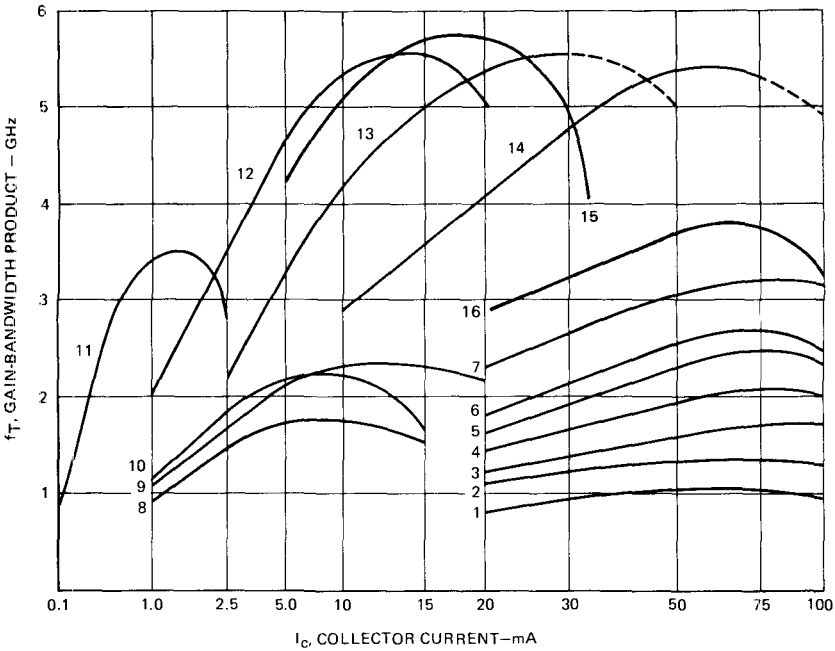

1	2N3866, 2N3866A, MM8000
2	2N5160, MM4018, PNP
3	2N3948, 2N4427, MRF207
4	2N5109, 2N5943, MM8001, MM8002
5	2N5583, PNP
6	2N5836, 2N5837
7	MRF511, MRF517, MRF525
8	2N2857, 2N3839, 2N5179, MRF501, MRF502
9	2N6304, 2N6305, BFX89, BFY90
10	2N4957, 2N495B, 2N4959, PNP
11	MRF931
12	2N6603, BFR90, MRF901, MRF904
13	2N6604, BFR91, MRF911, MRF914
14	BFR96, MRF961, MRF962, MRF965
15	BFW92A
16	MRF559

UHF and Microwave Oscillators

The transistors listed below are for UHF and microwave oscillator applications as initial signal sources or as output stages of limited range transmitters. Devices are listed in order of increasing output power.

Device Type	Test Conditions f MHz	Test Conditions V_{CC} Volts	P_{out} mW Min	f_T MHz Typ	Package
2N5179	500	10	20	1800	TO-72
2N2857	500	10	30	1800	TO-72
2N3839	500	6.0	30	1800	TO-72
MM8009	1680	20	200	1400	TO-39
2N5108	1680	20	300	1400	TO-39
MRF905	1680	20	500*	2200	TO-46
2N3866	400	15	1000	1000	TO-39

*Typical

Low-Noise Transistors

The low-noise devices listed are produced with carefully controlled r_b' and f_T to optimize device noise performance. Devices listed in the matrix are classified according to noise figure performance versus frequency.

NF dB	Frequency MHz 60	100	200	450	1000	2000	Polarity
1.5	2N5829 2N5031	2N5829 2N5031	 MRF904				PNP NPN
2.0	2N4957 2N5032	2N4957 2N5032	2N5829 2N5031	 MRF904	 MRF901		PNP NPN
2.5	2N4958 2N5032	2N4958 2N5032	2N4957 2N5032	2N5829 2N5031	 MRF901 2N6603		PNP NPN NPN
3.0	2N4959 2N2857	2N4959 2N2857	2N4958 2N5032	2N4957 2N5032	2N5829 MRF901 2N6604	 2N6603	PNP NPN NPN
3.5	2N4959 2N5179	2N4959 2N5179	2N4959 2N2857	2N4958 2N5032	2N4957 2N5031	 MRF901	PNP NPN
4.0	2N4959 2N5179	2N4959 2N5179	2N4959 2N5179	2N4959 2N2857	2N4958 2N5031	 2N6604	PNP NPN
4.5	2N4959 2N5179	2N4959 2N5179	2N4959 2N5179	2N4959 2N2857	2N4959 2N5032		PNP NPN

High-Speed Switches

The transistors listed below are for use as high-frequency current-mode switches. They are also suitable for RF amplifier and oscillator applications. The devices are listed in ascending order of collector current.

Device Type	Test Conditions I_C/V_{CE} mA/Volts	f_T MHz Min	$r_b'C_c$ Max	Package
2N3959	10/10	1300	25	TO-18
2N3960	10/10	1600	40	TO-18
2N5835	10/6.0	2500	5.0**	TO-72
MM4049*	20/5.0	4000	15	TO-72
MRF914	20/10	4500**	–	TO-72
2N5842	25/4.0	1700	40	TO-72
2N5841	25/4.0	2200	25	TO-72
2N5943	50/15	1200	5.5**	TO-39
2N5583*	50/10	1000	8.0**	TO-39
2N5836	50/6.0	2000	6.0**	TO-46
2N5837	100/3.0	1700	6.0**	TO-46

*PNP **Typ

CATV, MATV, and Class A Linear Transistors

The devices listed below are excellent for Class A linear CATV/MATV applications and are listed according to increasing gain-bandwidth (f_T). More information concerning the device for your specific linear design needs can be obtained through your local Motorola Sales Office or Motorola distributor.

Device Type	Nominal Test Conditions V_{CE}/I_C Volts/mA	f_T MHz Min	Noise Figure Max/Freq. dB/MHz	Distortion Specifications 2nd Order IMD	3rd Order IMD	12 Ch. Cross-Mod.	Output Level dBmV	Package
MRF501	6/5	600	4.5*/200					TO-72
MRF502	6/5	800	4.0*/200					TO-72
2N5179	6/5	900	4.5/200					TO-72
BFY90	5/2	1000	5.0/500					TO-72
2N6305	5/10	1200	5.5/450					TO-72
BFX89	5/25	1200	6.5/500					TO-72
2N5109	15/50	1200	3.0*/200					TO-39
2N5943	15/50	1200	3.4/200	-50		-42	+50	TO-39
2N6304	5/10	1400	4.5/450					TO-72
MRF511	20/80	1500	7.3*/200	-50	-65	-57	+50	144D-06
MRF517	15/60	2200	7.5/300	-60	-72	-57	+45	TO-39
BFW92A	5/2	4500*	3.0*/500					317A-01
BFR90	10/14	5000*	2.4*/500					317A-01
BFR91	5/35	5000*	1.9*/500					317A-01
BFR96	10/50	5000*	3.0*/500					317A-01
MRF961	10/50	5000*	2.0*/500					317-01
MRF962	10/50	5000*	2.0*/500					303-01
MRF965	10/50	5000*	2.0*/500					TO-46

*Typ

Small-Signal Amplifier Transistor Selection by Package

In small-signal RF applications the package style is often determined by the end application, or circuit construction technique. To aid the circuit designer in device selection, below are listed the Motorola broad range of RF small-signal amplifier transistors organized by package. Devices for other applications such as oscillators or switches are shown in the appropriate preceding tables.

TO-39 METAL CAN

Device Type	Gain–BW		Noise Figure			Gain		Maximum Ratings		
	f_T GHz	I_C mA	NF dB	f MHz	I_C mA	dB Min	f MHz	$V_{(BR)CEO}$ V	I_C mA	P_T W
MM8000	0.7	50	2.7	200	10	11.4*	200	30	0.4	3.50
MM8001	0.9	50	2.7	200	10	11.4*	200	30	0.4	3.50
2N5109	1.2	50	3.0	200	10	11	216	20	400	2.50
2N5943	1.2	50	3.4	200	30	11.4*	200	30	400	3.50
MRF525†	2.5	50	4.0	400	–	13	400	35**	150	2.50
MRF517	2.7	60	7.5	300	50	10*	300	35**	150	2.50

†Grounded Emitter TO-39. *Typ **$V_{(BR)CBO}$

TO-72 METAL CAN

Device Type	Gain–BW		Noise Figure			Gain		Maximum Ratings		
	f_T GHz	I_C mA	NF dB	f MHz	I_C mA	dB Min	f MHz	$V_{(BR)CEO}$ V	I_C mA	P_T mW
2N5031	1.0	5.0	2.5	450	1.0	14	450	10	20	200
2N5032	1.0	5.0	3.0	450	1.0	14	450	10	20	200
2N4958*	1.0	2.0	3.3	450	2.0	16	450	30	30	200
2N4959*	1.0	2.0	3.8	450	2.0	15	450	30	30	200
2N5829*	1.2	2.0	2.5	450	2.0	17	450	30	30	200
2N4957*	1.2	2.0	3.0	450	2.0	17	450	30	30	200
MRF501	1.2	5.0	4.0	200	1.5	15**	200	15	50	200
MRF502	1.2	5.0	4.0	200	1.5	15**	200	15	50	200
2N6305	1.2	10	5.5	450	2.0	12	450	15	50	200
BFX89	1.2	25	6.5	500	2.0	19	200	15	50	200
BFY90	1.4	25	5.0	500	2.0	21	200	15	50	200
2N5179	1.4	10	4.5	200	1.5	15	200	12	50	200
2N6304	1.4	10	4.5	450	2.0	15	450	15	50	200
2N3839	1.6	8.0	3.9	450	1.5	12.5	450	15	40	200
2N2857	1.6	8.0	4.1	450	1.5	12.5	450	15	40	200
MRF904	4.0	15	1.5	450	5.0	16	450	15	30	200
MRF914	4.5	20	2.0	500	5.0	15	500	12	40	200

*PNP **Typ

PLASTIC — SOE — CASE 317-01/317A-01

Device Type	Gain—BW		Noise Figure			Gain		Maximum Ratings		
	f_T GHz	I_C mA	NF dB	f MHz	I_C mA	dB Min	f MHz	$V_{(BR)CEO}$ V	I_C mA	P_T mW
MRF931	3.0	1.0	3.8	500	0.25	16*	500	5.0	5.0	50
MRF559	3.0	100	—	—	—	1.3*	512	18	150	2000
BFW92A	4.0	25	2.5	500	2.0	16*	500	5.0	50	190
MRF901	4.5	15	2.0	1000	5.0	10	1000	15	30	375
BFR96	4.5	50	2.0*	500	10	12	500	15	100	500
MRF961	4.5	50	2.0*	500	10	13.5	500	15	100	500
MRF911	5.0	30	2.5	1000	5.0	12.5*	1000	12	40	400
BFR90	5.0	14	2.4	500	2.0	18*	500	15	30	180
BFR91	5.0	30	1.9	500	2.0	16*	500	12	35	180

*Typ

CERAMIC — SOE — CASE 144D-06, 303-01

Device Type	Gain—BW		Noise Figure			Gain		Maximum Ratings		
	f_T GHz	I_C mA	NF dB	f MHz	I_C mA	dB Min	f MHz	$V_{(BR)CEO}$ V	I_C mA	P_T mW
2N5947	1.5	75	3.8	200	50	10	250	30	400	5000
MRF511	2.1	80	7.3	200	50	10	250	25	250	5000
2N6603	4.5	15	2.0	1000	5.0	13*	1000	15	30	400
MRF962	4.5	50	2.0*	500	10	15	500	15	100	750
2N6604	5.0	30	2.5	1000	5.0	14	1000	12	50	500

*Typ

Linear Hybrid Amplifier Modules

The Hybrid Modules listed are specified for amplifier applications in CATV distribution equipment, but are applicable wherever broadband low-distortion, low-noise amplification is required. These modules are also specified as wideband amplifiers for use in communications/instrumentation equipment operating in bands from 0.1 MHz to 1000 MHz.

CATV Hybrid Modules

All-Gold metallization of Motorola's CATV Hybrid Modules enhances reliability by reducing the failures associated with dissimilar-metal bonding. Chip geometries are optimized to reduce distortion products, and hybrid structures are designed to produce "signature-free" response for long cascades.

35-Channel, +24 Vdc Supply

Device Type	Gain 40-300 MHz dB Min/Typ	Maximum Distortion Specifications: Output Level dBmV	2nd Order Test Note 1 dB	35-Channel Triple Beat dB	35-Channel Cross-Mod. dB	Noise Figure @ 300 MHz dB
MHW1121	11.6/12.0	+50	-68	-51	-51	7.0
MHW1122	11.6/12.0	+50	-70	-56	-56	8.0
MHW1171	16.6/17	+50	-68	-51	-51	7.0
MHW1172	16.6/17	+50	-70	-56	-56	8.0
MHW1221	21.4/22	+50	-64	-51	-51	6.0
MHW1222	21.4/22	+50	-66	-55	-56	7.0
MHW1341	33/34	+48	-68	-55	-55	7.0
MHW1342	33/34	+48	-70	-58	-57	7.0
MHW1343**	33/34	+48	-64	-58	-57	6.0
MHW1344**	33/34	+48	-64	-58	-57	6.0

Note 1. Channels (2 and 13) @ R. **Two Section—Accessible Interstage.

35-Channel, -24 Vdc Supply

MHW1171R	16.6/17	+50	-66	-51	-51	7.0
MHW1172R	16.6/17	+50	-68	-56	-56	8.0

Reverse Amplifiers, +24 Vdc Supply, 5.0 to 120 MHz

MHW1182	18.0/18.5	+50	-72	-80†	-57††	7.0

† 3 Channel Triple Beat. †† 12 Channels @ P_{out} = +54 dBmV.

53-Channel, +24 Vdc Supply

Device Type	Gain 40-400 MHz dB Min/Typ	Typical Distortion Specifications				Noise Figure @ 400 MHz dB
		Output Level dBmV	2nd Order Test Note 1 dB	53-Channel Triple Beat dB	53-Channel Cross-Mod. dB	
MHW4171	16.5/17	+46	-65	-55	-59	6.5
MHW4172	16.5/17	+46	-72	-58	-62	7.5
MHW4341	33/34	+44	-65	-56	-62	6.0
MHW4342	33/34	+44	-70	-60	-65	5.0

Note 1. Channels (2 and M6) @ M15.

General-Purpose 50 Ω — 100 Ω Wideband Modules

Device Type	Frequency Range MHz	Gain dB Min/Typ	Supply Voltage Vdc	Output Level 1 dB Compression mW/f (MHz)	Noise Figure @ 250 MHz dB
MHW590	10-400	32.5/34	24	800/200	5.0
MHW591	1.0-250	35/36.5	13.6	700/100	5.0
MHW592	1.0-250	34.5/36	24	900/100	5.0
MHW593	10-400	34/35.5	13.6	600/200	4.5

TO-39 Wideband, 50 Ω Modules

The MWA Series features excellent gain versus frequency flatness, temperature stability and are cascadable for high gain lineups. Construction techniques include thin film gold metal circuitry and hermetic TO-39 package.
MWA devices processed similarly to MIL-S-883, Method 5004.4, Class B, are available to special order.

Device Type	Frequency Range MHz	Gain dB Min/Typ	Supply Voltage Vdc	Output Level 1 dB Compression dBm Typ	Noise Figure (400 MHz) dB Typ
MWA110	0.1-400	13/14	2.9	-2.5	4.0
MWA120	0.1-400	13/14	5.0	+8.2	5.5
MWA130	0.1-400	13/14	5.5	+18	7.0
MWA210	0.1-600	9/10	1.75	+1.5	6.0
MWA220	0.1-600	9/10	3.2	+10.5	6.5
MWA230	0.1-600	9/10	4.4	+18.5	7.5
MWA310	0.1-1000	7/8	1.60	+3.5	6.5
MWA320	0.1-1000	7/8	2.9	+11.5	6.7
MWA330	0.1-1000	—/6.2	4.0	+15.2	9.0

High Reliability RF Transistors

The listed devices are active per QPL-19500 (Qualified Products List). Check with your local Motorola Sales Office or franchised Distributor for current qualification status and additions.

2N2857JAN	2N3960JAN
2N2857JTX	2N3960JTX
2N2857JTXV	2N3960JTXV
2N3375JAN	2N4957JAN
2N3375JTX	2N4957JTX
2N3375JTXV	2N4957JTXV
2N3553JAN	2N5109JAN
2N3553JTX	2N5109JTX
2N3553JTXV	2N5109JTXV
2N3866JAN	2N6603JAN
2N3866JTX	2N6603JTX
2N3866JTXV	2N6603JTXV
2N3866AJAN	2N6604JAN
2N3866AJTX	2N6604JTX
2N3866AJTXV	2N6604JTXV

Transistor Complements

The transistor complements listed are suitable for most applications requiring NPN and PNP devices of similar RF characteristics. If your application demands special matching of complementary transistors, please contact your local Motorola Sales Office or Motorola distributors.

NPN	PNP
2N2857	2N4958
2N3375	2N5161
2N3553	MM4019
2N3866	2N5160
2N3959, 2N3960	2N4260, 2N4261
2N3960JAN	MM4261H
2N5643	2N5162
2N6080	2N6094
2N6081	2N6095
2N6082	2N6096
2N6084	2N6097
2N5943	2N5583
MRF433	MRF432
MRF531	MRF532
MRF904	MM4049

Package Overview

CASE 20-03
TO-206AF
(TO-72)

CASE 22-03
TO-206AA
(TO-18)

CASE 26-03
TO-206AB
(TO-46)

CASE 36-03
TO-210AB
(TO-60)

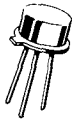

CASE 79-02
TO-205AD
(TO-39)

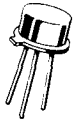

CASE 79-03

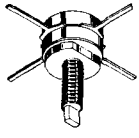

CASE 144B-05

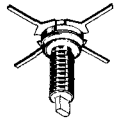

CASE 144D-06

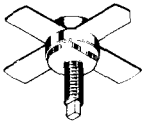

CASE 145A-09

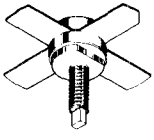

CASE 145A-10

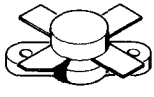

CASE 211-07
CASE 211-09

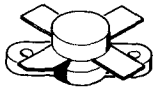

CASE 211-08
CASE 211-11

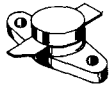

CASE 215-02

CASE 221A-02
(TO-220AB)

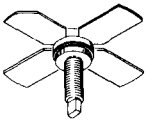

CASE 244-04

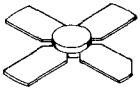

CASE 249-05

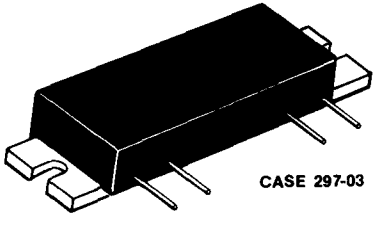

CASE 297-03

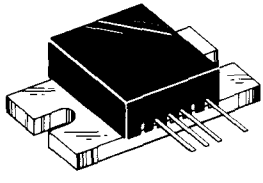

CASE 297A-03

PACKAGE OVERVIEW (continued)

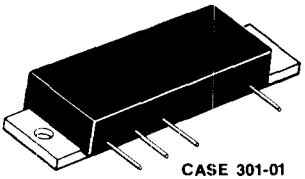

CASE 301-01

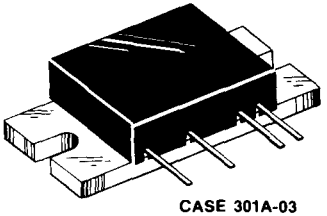

CASE 301A-03

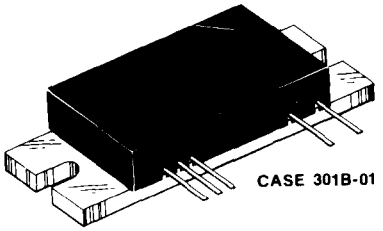

CASE 301B-01

CASE 303-01

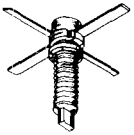

CASE 305-01

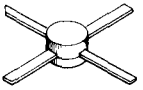

CASE 305A-01

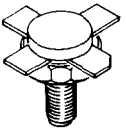

CASE 307-01

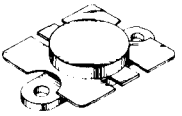

CASE 316-01

CASE 317-01
(MACRO-X)

CASE 317A-01

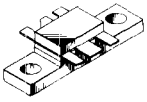

CASE 319-03

CASE 328-02

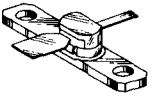

CASE 328A-01

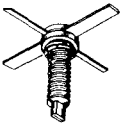

CASE 332-02

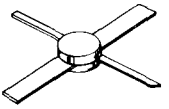

CASE 332A-01

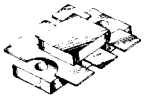

CASE 333-01

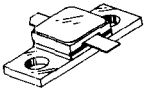

CASE 337-02

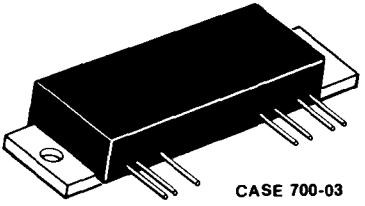

CASE 700-03

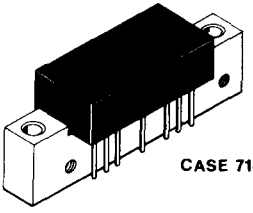

CASE 714-02

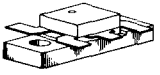

CASE 739-01

20

Tuning and HF Diodes

Tuning Diodes (voltage-variable-capacitance diodes) are used as the variable element of a circuit to change (or tune) its resonant frequency. Motorola offers a broad line of these products, with a wide selection of capacitance values, tuning ranges, and packages.

Table of Contents

	Page
General-Purpose Tuning Diodes	21-2
High-Capacitance Tuning Diodes	21-4
FM/TV Tuning Diodes	21-6
AM Radio Tuning Diodes	21-6
Hot-Carrier Diodes	21-7
PIN Switching Diodes	21-7

General-Purpose Tuning Diodes

Voltage variable capacitance diodes for electronic tuning and control of RF circuits through UHF.

GENERAL-PURPOSE—ABRUPT JUNCTION TUNING DIODES

		• HIGH Q • CAPACITANCE TOL 10% - No Suffix 5% - Suffix A			• PREMIUM 60-V GLASS LINE • HIGH Q GUARANTEED @ 4 0 V • CONTROLLED CR			• PREMIUM 30-V LINE • VERY HIGH Q • GUARANTEED HIGH CR • CAPACITANCE TOL 10% - A, 5% - B, 2% - C			• HIGH Q • CONTROLLED CR • CAPACITANCE TOL 10% - A, 5% - B, 2% - C		
		MAXIMUM WORKING VOLTAGE											
		60 VOLTS						30 VOLTS					
		Glass 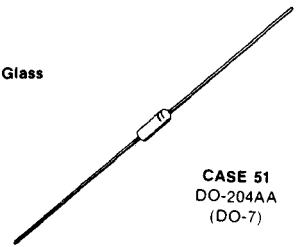 CASE 51 DO-204AA (DO-7)											
		Cap Ratio 4-60 V Min	Q @ 4.0 V 50 MHz Min	Device Type	Cap Ratio 4-60 V Min	Q @ 4.0 V 50 MHz Min	Device Type	Cap Ratio 2-30 V Min	Q @ 4.0 V 50 MHz Min	Device Type	Cap Ratio 2-30 V Min	Q @ 4.0 V 50 MHz Min	Device Type
C_T NOMINAL CAPACITANCE pF +10% @ V_R = 4.0 V f = 1.0 MHz	6.8	2.7	350	1N5139, A				2.7	600	1N5461A	2.5	450	1N5441A
	8.2							2.8	600	1N5462A	2.5	450	1N5442A
	10	2.8	300	1N5140, A	3.0	500	MV1866	2.8	550	1N5463A	2.6	400	1N5443A
	12	2.8	300	1N5141, A	3.0	500	MV1868	2.8	550	1N5464A	2.6	400	1N5444A
	15	2.8	250	1N5142, A	3.0	400	MV1870	2.8	550	1N5465A	2.6	450	1N5445A
	18	2.8	250	1N5143, A	3.0	400	MV1871	2.9	500	1N5466A	2.6	350	1N5446A
	20							2.9	500	1N5467A	2.6	350	1N5447A
	22	3.2	200	1N5144, A	3.2	400	MV1872	2.9	500	1N5468A	2.6	350	1N5448A
	27	3.2	200	1N5145, A	3.2	300	MV1874	2.9	500	1N5469A	2.6	350	1N5449A
	33	3.2	200	1N5146, A	3.2	300	MV1876	2.9	500	1N5470A	2.6	350	1N5450A
	39	3.2	200	1N5147, A	3.2	300	MV1877	2.9	450	1N5471A	2.6	300	1N5451A
	47	3.2	200	1N5148, A	3.2	300	MV1878	2.9	400	1N5472A	2.6	250	1N5452A
	56							2.9	300	1N5473A	2.6	200	1N5453A
	68							2.9	250	1N5474A	2.7	175	1N5454A
	82							2.9	225	1N5475A	2.7	175	1N5455A
	100							2.9	200	1N5476A	2.7	175	1N5456A

GENERAL-PURPOSE—ABRUPT JUNCTION TUNING DIODES (Continued)

• GENERAL-PURPOSE			• GENERAL-PURPOSE			• LOW-COST • HIGH VOLUME			• LOWER COST • GENERAL-PURPOSE			
MAXIMUM WORKING VOLTAGE												
30 VOLTS			20 VOLTS			30 VOLTS			25 VOLTS			
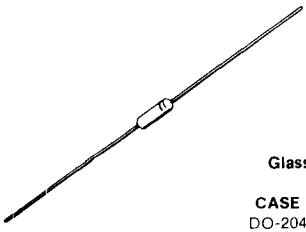 Glass **CASE 51** DO-204AA (DO-7)						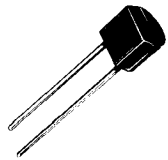 Plastic **CASE 182** TO-226AC 2-Lead TO-92						
Cap Ratio 4-25 V Min	**Q @ 4.0 V 50 MHz Min**	**Device Type**	**Cap Ratio 2-20 V Min**	**Q @ 4.0 V 50 MHz Min**	**Device Type**	**Cap Ratio 2-30 V Min**	**Q @ 4.0 V 50 MHz Min**	**Device Type**	**Cap Ratio 1-10 V Min**	**Q @ 4.0 V 50 MHz Min**	**Device Type C_T ±20%**	**C_T NOM pF**
			2.0	300	MV1620	2.5	450	MV2101	1.9	300	MV2201	**6.8**
			2.0	300	MV1622	2.5	450	MV2102				**8.2**
			2.0	300	MV1624	2.5	400	MV2103	2.0	200	MV2203	**10**
			2.0	300	MV1626	2.5	400	MV2104				**12**
1.8	30	MV830	2.0	250	MV1628	2.5	400	MV2105	2.0	200	MV2205	**15**
1.8	25	MV831	2.0	250	MV1630	2.5	350	MV2106				**18**
			2.0	250	MV1632							**20**
1.8	25	MV832	2.0	250	MV1634	2.5	350	MV2107	2.0	150	MV2207	**22**
1.8	25	MV833	2.0	200	MV1636	2.5	300	MV2108				**27**
1.9	20	MV834	2.0	200	MV1638	2.5	200	MV2109	2.0	150	MV2209	**33**
1.9	20	MV835	2.0	200	MV1640	2.5	150	MV2110				**39**
1.9	15	MV836	2.0	200	MV1642	2.5	150	MV2111	2.0	100	MV2211	**47**
1.9	15	MV837	2.0	150	MV1644	2.6	150	MV2112				**56**
2.0	15	MV838	2.0	150	MV1646	2.6	150	MV2113	2.0	100	MV2213	**68**
2.0	10	MV839	2.0	150	MV1648	2.6	100	MV2114				**82**
2.0	10	MV840	2.0	150	MV1650	2.6	100	MV2115	2.0	50	MV2215	**100**

High-Capacitance Tuning Diodes

HIGH-CAPACITANCE—ABRUPT JUNCTION

		• HIGH-CAPACITANCE • GENERAL-PURPOSE						• LOWER COST • GENERAL-PURPOSE		
		MAXIMUM WORKING VOLTAGE								
		20 VOLTS			15 VOLTS			20 VOLTS		
		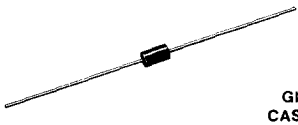 **Glass** **CASE 146** DO-204AB (DO-14)						 **Plastic** **CASE 182** TO-226AC 2-Lead TO-92		
		Cap Ratio 2-20 V Typ	**Q @ 4.0 V 20 MHz Min**	**Device Type**	**Cap Ratio 2-15 V Typ**	**Q @ 4.0 V 20 MHz Min**	**Device Type**	**Cap Ratio 2-20 V Min**	**Q @ 4.0 V 20 MHz Min**	**Device Type**
C_T	**120**	2.6	250	MV1652				2.3	250	MV2301
NOMINAL	**150**	2.6	250	MV1654				2.3	250	MV2302
CAPACITANCE	**180**	2.6	200	MV1656				2.3	200	MV2303
pF	**200**	2.6	200	MV1658				2.3	200	MV2304
±10%	**220**	2.6	150	MV1660				2.3	150	MV2305
@	**250**				2.3	150	MV1662	2.3	150	MV2306
V_R = 4.0 V	**270**				2.3	100	MV1664	2.3	100	MV2307
f = 1.0 MHz	**330**				2.3	100	MV1666	2.3	100	MV2308

TYPICAL CAPACITANCE versus REVERSE VOLTAGE

ABRUPT JUNCTION

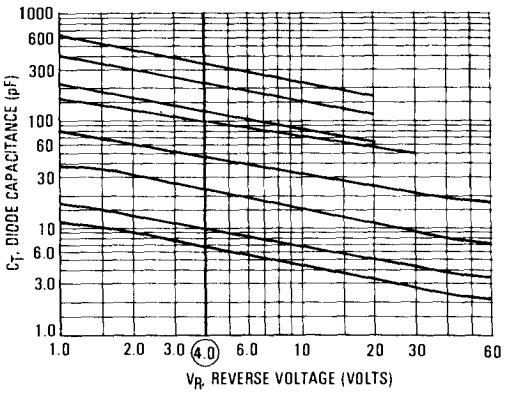

HIGH-CAPACITANCE HYPER-ABRUPT JUNCTION

- HYPER-ABRUPT
- HIGH TUNING RATIO
- HIGH REL - Suffix H

MAXIMUM WORKING VOLTAGE
12 VOLTS

C_T, Nominal Capacitance pF @ V_R Nom	Volts	Cap Ratio 2-10 V 1-10 V Min	Q @ 2.0 V 1.0 MHz Min	Device Type: Glass CASE 51 DO-204AA (DO-7)	Device Type: Glass CASE 146 DO-204AB (DO-14)
120	2.0	10	200	MV1404,H*	
175	2.0	10	200	MV1403,H*	
250	2.0	10	200	MV1405,H*	
550	1.0	14	200		MV1401

*100% processing for high reliability on "H" devices.

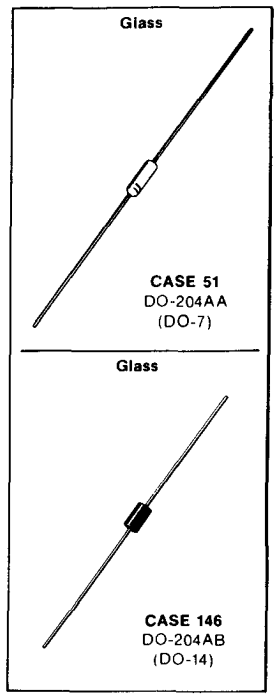

TYPICAL CAPACITANCE versus REVERSE VOLTAGE

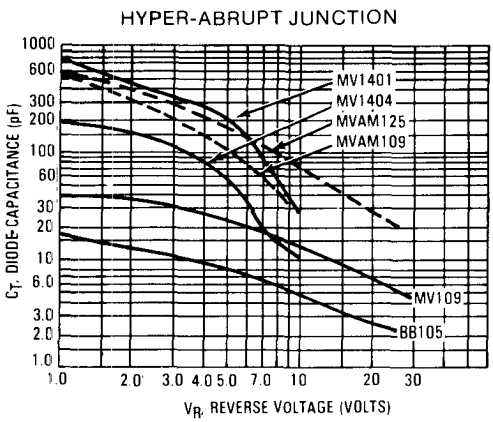

FM Radio and TV Hyper-Abrupt Tuning Diodes

			• HIGH Q • GUARANTEED CAPACITANCE RANGE • MONOLITHIC DUAL			• LOW INDUCTANCE • MINI-L PACKAGE			• SMALL GLASS PACKAGE FOR HERMETICITY AND RELIABILITY		
			MAXIMUM WORKING VOLTAGE								
			32 VOLTS			30 VOLTS					
			CASE 29 TO-226AC (TO-92)			**CASE 226** Mini-L			**CASE 299** DO-204AH (DO-35)		
C_T, Nominal Capacitance pF @ V_R			**Cap Ratio 3-30 V Min**	**Q @ 3.0 V 100 MHz Min**	**Device Type**	**Cap Ratio 3-25 V Min**	**Q @ 9.0 pF 100 MHz Min**	**Device Type**	**Cap Ratio 3-25 V Min**	**Q @ 3.0 V 50 MHz Min**	**Device Type**
Min	**Max**	**Volts**									
2.3	2.8	25				4.0	225	BB105A			
2.0	2.3	25				4.5	225	BB105B			
1.8	2.8	25				4.0	150	BB105G			
12.5	15.5	4.0							3.4 (3)	100(4)	MV310(5)
26	32	3.0	5.0	280(1)	MV209(2)	5.0	280(1)	MV109	5.0	280 typ	MV309
34	39	3.0	2.5	100	MV104G(6)						
37	42	3.0	2.5	100	MV104(6)						

(1) Q @ V_R = 3.0 V, f = 50 MHz
(2) Case 182 — Two-lead TO-92
(3) Cap Ratio over 1-25 V
(4) Q @ V_R = 4.0 V, f = 100 MHz
(5) MWV = 28 V
(6) Monolithic Dual

Plastic

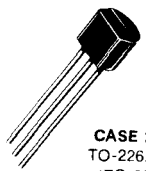

CASE 29
TO-226AC
(TO-92)

Plastic

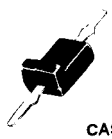

CASE 226
Mini-L

Glass

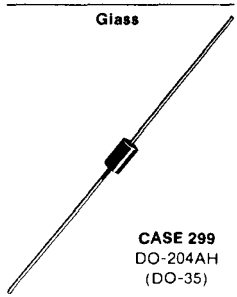

CASE 299
DO-204AH
(DO-35)

AM Radio Hyper-Abrupt Tuning Diodes

			● HIGH CAPACITANCE RATIO ● GUARANTEED DIODE CAPACITANCE ● CLOSE MATCHING				
			CASE 182 (TO-226AC) 2-Lead TO-92				
			$V_{BR(R)}$ Min	**Cap Ratio Min**	**V_R Volts**	**Q 1.0 V 1.0 MHz Min**	**Device Type**
C_T NOMINAL CAPACITANCE pF V_R = 1.0 V f = 1.0 MHz	460		12	15	1-8	150	MVAM108
	500		15	12	1-9	150	MVAM109
	500		18	15	1-15	150	MVAM115
			28	15	1-25	150	MVAM125

MATCHING

All tuning diodes are available in sets of any reasonable size, closely matched for capacitance over the tuning range.

Hot-Carrier Diodes

Hot-Carrier diodes are ideal for VHF and UHF mixer and detector applications as well as many higher frequency applications. They provide stable electrical characteristics by eliminating the point-contact diode presently used in many applications. Motorola has the capability of supplying these devices in a variety of packages.

$V_{(BR)R}$ I_R = 10 μA Volts Min	C_T f = 1.0 MHz pF Max	@ V_R Volts	V_F I_F = 10 mA Volts Max	I_R nA Max	@ V_R Volts	NF f = 1.0 GHz dB Max	Device Type	Case
4.0	1.0	0	0.6	250	3.0	7.0	MBD101	182
4.0	1.0	0	0.6	250	3.0	7.0	MBD102	226
20	1.5	15	0.6	200	15		MBD201	182
30	1.5	15	0.6	200	25		MBD301	182
50	1.0	20	1.2	200	25		MBD501	182
50	1.0	20	1.2	200	25		MBD502	226
70	1.0	20	1.2	200	35		MBD701	182
70	1.0	20	1.2	200	35		MBD702	226

Plastic

CASE 182
TO-226AC
2-Lead TO-92

Plastic

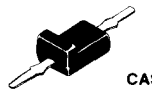

CASE 226
Mini-L

PIN Switching Diodes

. . . designed for VHF band switching and general-purpose switching.

Plastic

CASE 226
Mini-L

Glass

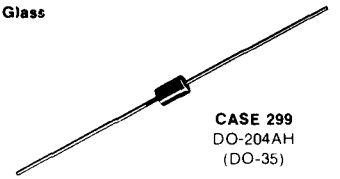

CASE 299
DO-204AH
(DO-35)

$V_{(BR)R}$ I_R = 10 μAdc Volts Min	R_S I_F = 10 mAdc f = 100 MHz Ohms Max	C_T V_R = 20 V V_R = 15 V(1) f = 1.0 MHz pF Max	L_S f = 250 MHz nH Typ	C_C f = 1.0 MHz pF Typ	Device Type	Case
35	0.7	1.0	3.0	0.1	MPN3401	226
35	0.6	2.0	3.0	0.1	MPN3402	226
35	0.6	2.0		0.4	MPN3500	299
20	1.0	2.0(1)		0.4	MPN3503	299
20	0.5	2.0(1)		0.4	MPN3504	299

Optoelectronics

Motorola's family of optoelectronic devices includes optocouplers, photo detectors and infrared emitters.

Optocouplers are widely used in applications requiring electrically isolated control of a function. Motorola's broad line of optocouplers features the high technology, optically isolated triac drivers and SCR output couplers designed for remote, low-power or microprocessor control of loads on 110 Vac and 200 Vac lines. All Motorola optocouplers are in a standard 6-Pin DIP package which is especially constructed to provide a minimum of 7500 V of isolation.

Fiber Optics is a new method of transmitting data over glass or plastic cable using modulated light. This type of data transmission provides electrical isolation and immunity to the RFI and EMI problems common to wire systems.

Motorola offers a broad line of powerful LEDs and a diverse selection of detectors in a new unique ferrule package and in the standard lensed TO-18 type package. The ferrule package was developed to provide maximum coupling of light between the device die and the fiber cable. This package mates with several available connector systems for efficient coupling of the semiconductor to any type or diameter fiber cable.

Table of Contents

	Page
Optical Couplers/Isolators	
Transistor Output	22-2
Darlington Output	22-2
Triac Driver Output	22-3
Linear Amplifier Output	22-3
SCR Output	22-4
Infrared-Emitting Diodes	22-5
Silicon Photo Detectors	
Photodiodes	22-5
Phototransistors	22-6
Photodarlingtons	22-6
Photo Triac Drivers	22-6
Fiber Optic Devices	
Infrared Emitters	22-7
Photo Detectors	22-7
Transmitters	22-8
Receivers	22-8
Accessories	22-9

Optical Couplers/Isolators

Couplers are designed to provide isolation protection from high-voltage transients, surge voltage, or low-level noise that would otherwise damage the input or generate erroneous information. They allow interfacing systems of different logic levels, different grounds, etc., that would otherwise be incompatible. Motorola couplers are tested and specified to an isolation voltage of 7500 Vac peak.

Motorola offers a wide array of standard devices with a wide range of specifications (including the first series of DIP transistors and Darlington couplers to achieve JEDEC registration: transistors — 4N25 thru 4N38, and Darlingtons — 4N29 thru 4N33). All Motorola couplers are UL Recognized with File Number E54915.

CASE 730A

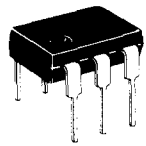

The Transistor Coupler is probably the most popular form of isolator since it offers moderate speed (approximately 300 kHz), sensitivity and economy. In addition, the collector-base junction can be used as a photodiode to achieve higher speeds. The output in the diode mode is lower, requiring amplification for more usable output levels.

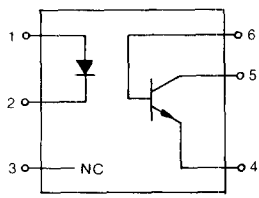

The Darlington Transistor Coupler is used when high transfer ratios and increased output current capability are needed. The speed, approximately 30 kHz, is slower than the transistor type but the transfer ratio can be as much as ten times as high as the single transistor type.

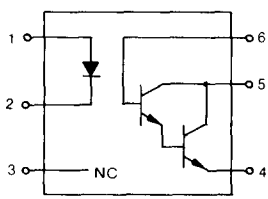

Notes:
1. Isolation Surge Voltage, V_{ISO}, is an internal device dielectric breakdown rating. For this test LED pins 1 and 2 are common and phototransistor pins 4, 5, and 6 are common.
2. All Motorola couplers are specified at 7500 Vac peak (5 seconds). This usually exceeds the originator's specification and JEDEC registered values.

Transistor Output

Isolation Voltage is 7500 V (Min) on all devices. See notes.

Device Type	DC Current Transfer Ratio % Min	$V_{(BR)CEO}$ Volts Min
TIL112	2.0	20
TIL115	2.0	20
IL15	6.0	30
MCT26	6.0	30
TIL111	8.0	30
TIL114	8.0	30
IL12	10	20
MOC1006	10	30
4N27	10	30
4N28	10	30
H11A4	10	30
TIL124	10	30
TIL153	10	30
IL74	12.5	20
MOC1005	20	30
TIL125	20	30
TIL154	20	30
4N25	20	30
4N26	20	30
H11A2	20	30
H11A3	20	30
H11A520	20	30
IL1	20	30
MCT2	20	30
TIL116	20	30
4N38	20	80
H11A5	30	30
MCT271	45	30
H11A1	50	30
H11A550	50	30
TIL117	50	30
TIL126	50	30
TIL155	50	30
CNY17	62	70
MCT275	70	80
MCT272	75	30
MCT277	100	30
4N35	100	30
4N36	100	30
4N37	100	30
H11A5100	100	30
MCT273	125	30
MCT274	225	30

Darlington Output

Isolation Voltage is 7500 V (Min) on all devices. See notes.

Device Type	DC Current Transfer Ratio % Min	$V_{(BR)CEO}$ Volts Min
4N31	50	30
H11B3	100	25
4N29	100	30
4N30	100	30
MCA230	100	30
H11B255	100	55
MCA255	100	55
H11B2	200	25
MCA231	200	30
MOC119*	300	30
TIL119*	300	30
TIL113	300	30
MOC8030*	300	80
TIL127	300	30
TIL128*	300	30
TIL156	300	30
TIL157*	300	30
H11B1	500	25
4N32	500	30
4N33	500	30
MOC8020*	500	50
MOC8050*	500	80
MOC8021*	1000	50

* Pin 3 and Pin 6 are not connected.

The Triac Driver Output Coupler is a gallium-arsenide IRED, optically coupled to a silicon bilateral switch designed for applications requiring isolated triac triggering such as interface from logic to 110/220 V RMS line voltage. These devices offer low current, isolated ac switching; high output blocking voltage; small size; and, low cost.

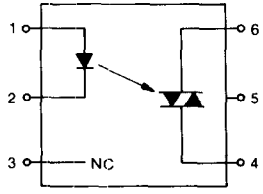

Triac Driver Output

Isolation Voltage is 7500 V (min) on all devices. See notes.

Device Type	LED Trigger Current mA Max	Peak Blocking Voltage Volts Max
MOC3009	30	250
MOC3010	15	250
MOC3011	10	250
MOC3020	30	400
MOC3021	15	400
MOC3030*	30	250
MOC3031*	15	250
MOC3040*	30	400
MOC3041*	15	400

*With Zero-Crossing Detector.

The Optically-Isolated AC Linear Coupler is a gallium-arsenide IRED optically coupled to a bipolar monolithic amplifier. Converts an input current variation to an output voltage variation while providing a high degree of electrical isolation between input and output. Can be used for telephone line coupling, peripheral equipment isolation, audio and other applications.

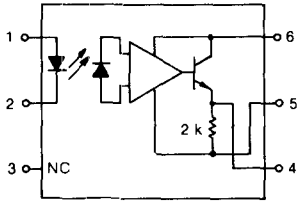

Linear Amplifier Output

Isolation Voltage is 7500 V (min). See notes.

Device Type	Transfer Gain @ V_{CC} = 12 V, mV/mA Typ	Single Ended Distortion @ V_{CC} = 12 V, I_{sig} = 1.0 mA % Typ
MOC5010	200	0.2

22

SCR Couplers

The SCR Output Coupler is a gallium-arsenide IRED optically coupled to a photo sensitive silicon controlled rectifier (SCR). It is designed for applications requiring high electrical isolation between low voltage circuitry like integrated circuits, and the ac line.

SCR Output

Isolation Voltage is 7500 V (min) on all devices.

Device Type	LED Trigger Current mA Max		Peak Blocking Voltage
	V_{AK} = 50 V R_{GK} = 10 kΩ	V_{AK} = 100 V R_{GK} = 27 kΩ	Volts Max
MOC3000 *	30	14	400
MOC3001 *	20	11	400
MOC3002	30	14	250
MOC3003	20	11	250

* To be introduced

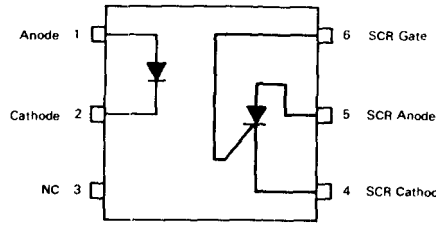

MOTOROLA OPTO COUPLERS QUALIFIED UNDER VDE 883 SPECIFICATION

(Internal distance between metallics 0,4 mm)

DEVICE TITLES VDE SPECIFIED		STANDARD SPEC
1. Transistor		
MOC601A	CTR 10%	4N28
MOC602A	CTR 20%	4N25
MOC603A	CTR 50%	4N25 Upgrade
MOC604A	CTR 100%	4N35
2. Darlington		
MOC622A	CTR 100%	Downgrade MOC119
MOC623A	CTR 300%	MOC119
MOC624A	CTR 500%	MOC8050
MOC625A	CTR 1000%	MOC8021
3. Triac Driver		
MOC633A	IFT 30 MA	MOC3020
MOC634A	IFT 15 MA	MOC3021
MOC635A	IFT 30 MA	MOC3040
MOC636A	IFT 15 MA	MOC3041

Infrared-Emitting Diodes

Infrared (900 nm) gallium-arsenide emitters are available from Motorola for use in light modulators, shaft or position encoders, punched card and tape readers, optical switching and logic circuits. They are spectrally matched for use with silicon detectors.

Peak Emission Wavelength = 900 nm (Typ)
Forward Voltage @ 50 mA = 1.2 (Typ).

Emission Angle — Angle at which IR emission is 15% of maximum intensity.

Package	Device Type	Emission Angle *a*	Instantaneous Power Output Typ
Actual Size Case 209-02 Metal	MLED930	30°	650 μW @ 100 mA
Actual Size Case 29-02 Plastic	MLED92 MLED93 MLED94 MLED95	110°	650 μW @ 100 mA 3.0 mW @ 100 mA 5.0 mW @ 100 mA 8.0 mW @ 100 mA

Silicon Photo Detectors

A variety of silicon photo detectors are available for a wide range of light detecting applications. Devices are available in packages offering choices of viewing angle and size in either low-cost, economical, plastic cases or rugged, hermetic, metal cans. Advantages over photo tubes are high sensitivity, good temperature stability, and proven silicon reliability. Applications include card and tape readers, pattern and character recognition, shaft encoders, position sensors, counters, and others. Maximum sensitivity occurs at approximately 800 nm.

Photodiodes

Photodiodes are used where high speed is required (1.0 ns).

Package	Type Number	Light Current μA Typ	@ H mW/cm²	$V_{(BR)}$ Volts Min	Dark Current nA Max	@ Volts
Actual Size Case 209-02 Metal Convex Lens	MRD500	9.0	5.0	100	2.0	20
Actual Size Case 210-01 Metal Flat Lens	MRD510	2.0	5.0	100	2.0	20

Phototransistors

Phototransistors are used where moderate sensitivity and medium speed (2.0 μs) are required.

Package	Type Number	Light Current mA Typ	@ H mW/cm²	$V_{(BR)CEO}$ Volts Min	Dark Current nA Max	@ VCE Volts
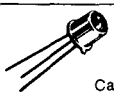 Actual Size Case 82-05 Metal	MRD310	2.5	5.0	50	25	20
	MRD300	7.5	5.0	50	25	20
Actual Size Case 29-02	L14H4	0.5	10	30	100	10
	L14H1	0.5	10	60	100	10
	L14H2	2.0	10	30	100	10
	L14H3	2.0	10	60	100	10
Actual Size Case 82-05 Metal	MRD3050	0.2	5.0	30	100	20
	MRD3051	0.2	5.0	30	100	20
	MRD3054	1.2	5.0	30	100	20
	MRD3055	1.8	5.0	30	100	20
	MRD3056	2.5	5.0	30	100	20

Photodarlingtons

Photodarlingtons are used where maximum sensitivity is required with typical rise and fall times of 50 μs.

Package	Type Number	Light Current µA Typ	@ H mW/cm²	$V_{(BR)CEO}$ Volts Min	Dark Current nA Max	@ Volts
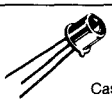 Actual Size Case 82-05 Metal	MRD370	10	0.5	40	100	10
	MRD360	20	0.5	40	100	10
Actual Size Case 29-02 Plastic	MRD14B	2.0	2.0	12	100	12
	2N5777	4.0	2.0	25	100	12
	2N5778	4.0	2.0	40	100	10
	2N5779	8.0	2.0	25	100	12
	2N5780	8.0	2.0	40	100	12

Photo Triac Drivers

Photo triac drivers contain a light sensitive IC acting as a trigger device for direct interface with a triac.

Package	Type Number	Trigger* Sensitivity H mW/cm² Typ	On-State RMS Current mA Max	Off-State Output Terminal Voltage Volts Peak Min	Peak Blocking Current nA Typ
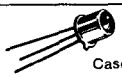 Actual Size Case 82-05	MRD3010	1.0	100	250	10
	MRD3011	0.5	100	250	10

*Irradiance level to Latch Output.

Fiber Optic Devices
Infrared Emitters

Designed as infrared sources for fiber optic communication systems. These devices are designed to conveniently fit within compatible AMP connectors. (TO-18 type packages fit AMP connector 227015; ferruled semiconductors fit AMP connector 227240-1.)

Both 820 nm and 900 nm wavelengths are available. Unless otherwise noted, the optical port of the ferruled devices is 200 μm fiber optic core diameter.

	Package	Device Type	Total Power Output Typ	@ I_F (mA)	λ nm	Fiber Core Diameter	NA	Response Time t_r/t_f Typ ns
TO-18	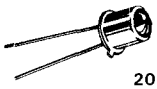 209-02	MFOE100	550 μW	50	900	—	—	50
		MFOE200	1.6 mW	50	940	—	—	250
FERRULED	338-02	MFOE102F	140 μW	100	900	200	0.7	25
		MFOE103F	140 μW	100	900	200	0.7	15
	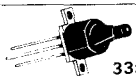 338D-01	MFOE106F	700 μW	100	820	200	0.50	15
		MFOE107F	1100 μW	100	820	200	0.50	15
		MFOE108F	1500 μW	100	820	200	0.50	15

Photo Detectors

Designed for the detection of infrared radiation in fiber optic communication systems. A family of detectors including PIN diodes, photo transistors (XSTR), photo Darlingtons (DARL), and monolithic Integrated Detector Preamplifiers (IDP) are provided. The Integrated Detector Preamplifiers contain light detectors, transimpedance preamplifiers, and quasi-complementary outputs. These devices are designed to conveniently fit within compatible AMP connectors. (TO-18 type packages fit AMP connector 227015; ferruled semiconductors fit AMP connector 227240-1.)

The optical port of the ferruled devices is 200 μm fiber optic core diameter.

	Package	Device Type	Device Number	Responsivity Typ 820 nm	Responsivity Typ 900 nm	Operating Voltage Volts	Response Time Typ t_r/t_f
TO-18	209-02	PIN	MFOD100	20 μA/mW/cm²	18 μA/mW/cm²	20	10 ns/10 ns
	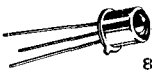 82-04	XSTR	MFOD200	8.4 mA/mW/cm²	5.6 mA/mW/cm²	20	2.5 μs/4.0 μs
		DARL	MFOD300	85 mA/mW/cm²	75 mA/mW/cm²	5.0	40 μs/60 μs
FERRULED	338-02	PIN	MFOD102F	0.5 μA/μW	0.4 μA/μW	20	25 ns/25 ns
		PIN	MFOD104F	0.5 μA/μW	0.4 μA/μW	5.0	6.0 ns/6.0 ns
	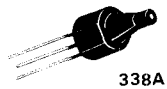 338A-02	XSTR	MFOD202F	115 μA/μW	100 μA/μW	20	2.5 μs/4.0 μs
		DARL	MFOD302F	6800 μA/μW	6000 μA/μW	5.0	40 μs/60 μs
		IDP	MFOD402F	1.7 mV/μW	1.5 mV/μW	15	20 ns/20 ns
	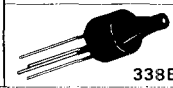 338B-01	IDP	MFOD404F	34 mV/μW	30 mV/μW	5.0	40 ns/40 ns
		IDP	MFOD405F	5.0 mV/μW	4.0 mV/μW	5.0	10 ns/10 ns

Transmitters

Complete signal processing circuitry is used to translate electrical energy to optical energy for fiber optic systems. This family includes monolithic integrated circuit drivers and complete fiber optic modules with infrared source.

Package	Device Type	Bandwidth	Operating Voltage Volts	Drive Current	P_O	λ nm	Optical Port
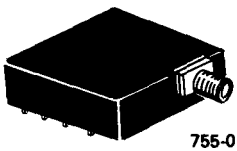 755-01	MFOL02T	200 kbit (TTL)	+5.0	100 mA	140 μW	900	200 μm

Receivers

Devices used to convert optical energy to conditioned electrical impulses in fiber optic systems. This family includes monolithic integrated circuit signal processing circuits with AGC and complete modules with TTL and ECL outputs.

Package	Device Type	Bandwidth	Operating Voltage Volts	AGC	Dynamic Range	Detector	Min Input for 10^{-9} BER
620-06	MFOC600	10 Mbit (TTL) 20 Mbit (ECL)	+5.0	yes	> 20 dB	IDP or PIN	–
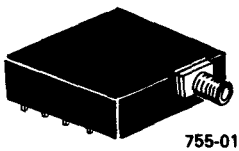 755-01	MFOL02R	200 kbit (TTL)	+5.0	no	>20 dB	PIN	10 nW (-50 dBm)

Accessories

A complement of parts are made available to ease the design of fiber optic systems using the Motorola ferruled semiconductor components, and are convenient items to the customer's purchasing cycle.

Device Type	Description
MFOA02	Connector, AMP 227240-1
MFOA03	Cable, 1 meter SIECOR 155, Terminated
MFOA10	Cable, 10 meters SIECOR 155, Terminated

Packaged Devices for Hybrid Circuits

An internationally standardized alternative to conventional 'chip-and-wire' hybrid assembly techniques is available from Motorola—the microminiature preassembled 'MiniBloc' package. A wide variety of discrete and IC components are available in MiniBloc packages, drawn from Motorola's repertoire of reliablility-proven semiconductor processes and geometries.

Table of Contents

	Page
MiniBloc	23- 2
SOIC	23-10

MiniBloc

A Standard Package for Hybrid Circuit Semiconductors

FEATURES

MiniBloc components provide significant advantages, both in new hybrid circuit designs and in updating existing chip-and-wire hybrids:

- **Complete Pretest Capability**—Unlike unencapsulated chips, which can only be partially tested in wafer form by probing, MiniBlocs are 100% electrically tested after die separation, wire bonding and encapsulation, giving performance comparable to their larger discrete counterparts.
- **Handling and Assembly Ease**—MiniBloc standard package outline permits both transistors and diodes to be placed on a hybrid substrate using automated handling equipment. Contact pads can also be standardized throughout the layout.
- **Pre-Formed Leads**—MiniBlocs are ready for placement onto the substrate, with no intermediate lead forming steps required.
- **Reliability**—All aluminum metallized chips used in MiniBloc packages are nitride passivated or glassivated, and are epoxy encapsulated for superior mechanical strength and moisture resistance.
- **Excellent RF Performance**—Microminiature leads reduce RF parasitics.
- **Small Size**—The amount of space required for a circuit is reduced by 25%—50% over conventional diode and transistor components. The profile of the MiniBloc is less than half the thickness of standard discrete components.
- **Marking Capability**—A two-digit code marked on every device eases identification in multichip hybrids.
- **Cost-Effectiveness**—MiniBloc handling and shipment packaging costs are low compared to more delicate unencapsulated chips. More complete testing of MiniBloc prior to hybrid assembly reduces rework costs.
- **Reflow Solderability**—Substrate attachment is by standard economical reflow methods.

MiniBloc is a trademark of Motorola Inc.

Off-the-shelf MiniBloc products include most popular small-signal U.S., European and Asian Chip types.

All U.S. standard Motorola MiniBloc devices will have a common alpha prefix, "MMB", "Motorola MiniBloc"; a fourth alpha character which relates to the type of device: T = Transistor, F = FET, V = Varactor, Z = Zener, R = RF, etc.; a numeric designation which corresponds to the device type already in existence. For example: a 2N2222 is an NPN Transistor. That chip in MiniBloc would be MMBT2222. European types use prefixes BCX, BCW, BAV, and BAW (Pro-Electron series). Asian types are MMBA, MMBB, and MMBC.

Additional types will be added to the MiniBloc line according to need. Motorola will encapsulate almost any small-signal die (Transistors, FETs, Varactors, Zeners, UJTs, etc.) in MiniBloc, depending on die compatibility and volume requirements. Inquiries regarding custom production runs are invited.

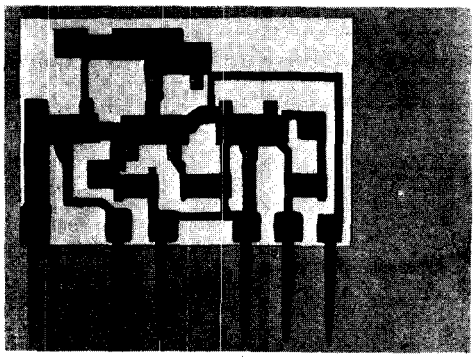

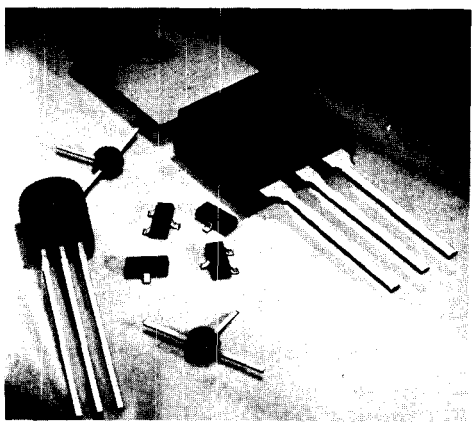

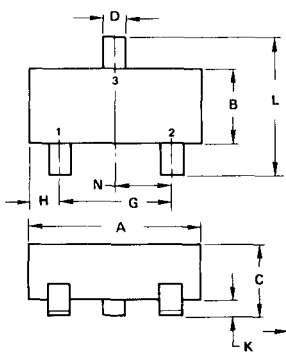

DIM	MILLIMETERS MIN	MILLIMETERS MAX	INCHES MIN	INCHES MAX
A	2.80	3.05	0.110	0.120
B	1.20	1.40	0.047	0.055
C	0.85	1.20	0.034	0.047
D	0.37	0.43	0.015	0.017
F	0.076	0.127	0.003	0.005
G	1.78	2.04	0.070	0.080
H	0.51	0.61	0.020	0.024
K	0.10	0.25	0.004	0.010
L	2.10	2.50	0.083	0.098
M	0.45	0.61	0.018	0.024
N	0.89	1.02	0.035	0.040

CASE 318
TO-236AA
(Similar to SOT23)

TABLE 1 — U.S. STANDARD TRANSISTORS

Transistor pinouts: 1-Base, 2-Emitter, 3-Collector

Device	NPN/PNP	Marking	Maximum Ratings V_{CEO} (V)	V_{CBO} (V)	V_{EBO} (V)	I_{CBO} Max (nA) @ V_{CB} (V)	I_{EBO} Max (nA) @ V_{EB} (V)	h_{FE} Min	h_{FE} Max	$V_{BE(on)}$ Min (V)	$V_{BE(on)}$ Max (V)	$V_{BE(on)}$ @ I_C (mA)	$V_{BE(on)}$ @ V_{CE} (V)	$V_{BE(sat)}$ Min (V)	$V_{BE(sat)}$ Max (V)	$V_{CE(sat)}$ Max (V)	$V_{CE(sat)}$ @ I_C/I_B (mA)	f_T Min (MHz)	f_T @ I_C (mA)	t_{off} Max (ns)	NF Typ (dB)	NF @ I_C (mA)	C_{OB} Max (pF)
GENERAL PURPOSE																							
MMBTA20	N	1C		40	4	100	30			40	400	5	10			.25			10/1	125	5			4
MMBTA70	P	2C																					
MMBT3904	N	1A	60	40	6					100	300	10	1			.2	.85	.85	10/1	200	10		5(1)	4
MMBT3906	P	2A	40		5											.25				250			4(1)	4.5
MMBT2222	N	1B	60	30	5	50	50	50	3	100	300	150	10			.4	.6	2	150/15	250	20			8
MMBT2907	P	2B		40		20												1.3		200	50			
MMBT2222A	N	1P	75	40	6	10	50	15	3	100	300	150	10			.3		1.2	150/15	200	20			8
MMBT2907A	P	2F	60	60	5											.4		1.3			50			
HIGH VOLTAGE																							
MMBTA42	N	1D	300	300	6	100	200	100	6	40		10	10			.5		.9	20/2	50	10			3#
MMBTA92	P	2D			5	250			3															6#
MMBTA43	N	1E	200	200	6	100	160	100	4	40		10	10			.4		.9	20/2	50	10			4#
MMBTA93	P	2E			5	250			3															8#
MMBT5550	N	1F	160	140	6	100	100	50	4	60	250	10	5			.15		1	10/1	100	10			6
DRIVERS																							
MMBTA06	N	1G	80	80	4	100	80			50		10	1		1.2	.25			100/10	100	10			
MMBTA56	P	2G																					
MMBTA05	N	1H	60	60	4	100	60			50		10	1		1.2	.25			100/10	100	10			
MMBTA55	P	2H																					
SWITCHES																							
MMBT2369	N	1J	40*	15	4	400	20			40	120	10	1			.25	.70	.85	10/1			18(2)		4
MMBT3640	P	2J	12	12	4					30	120	10	.3			.2	.8		10/1	500	10	35(3)		3.5
LOW-NOISE AUDIO AMPLIFIERS																							
MMBT6428	N	1K	60	60	5	10	30	10	5	250	650	.1	5	.56	.66	.2			10/.5	100	1		3(5)	
MMBT6429		1L	45	45						500	1250			(4)	(4)									
MMBT5086	P	2P	50	50	3	50	35	50	3	150	500	.1	5		.65	.3			10/1	40	.5		1.5(6)	
MMBT5087		2Q								250	800				(4)								1(6)	
MMBT5088	N	1Q	30	30	45	50	20	50	3	300	900				.8	.5				50			1(8)	
MMBT5089		1R	30	25		50	15	100	4.5	400	1200				(7)									
VHF/UHF AMPLIFIERS, MIXERS, OSCILLATORS																							
MMBTH24	N	3A	30	30	3	50	15			30		5	10							400	8			.35#
MMBT918	N	3B	30	15	3	60	15			20		3	1			.4		1	10/1	600	4			1.7
MMBTH81	P	3D	20	20		100	10	100	2	60		5	10		.9	.5			5/.5	600	5			.85#
MMBT3960	N	1S	3	3		100	3	100	1.5	100	200	10	1			.2	20 (10)	.85 .9	10/1	1600	30			2
MMBT3960A		1T	15	5						90	200													
MMBT4260	P	2R	15	10		50	10	50	1.5	30	150					.35	.7	1		1600	10			2.5
MMBT4261		2S								30	300					.4				2000				
CHOPPERS																							
MMBT404	P	2M	25	25	12	100	10	100	10	20	400	12	.15			.2		1	24/1					20
MMBT404A		2N	45	45	30																			
DARLINGTONS																							
MMBTA13	N	1M	30*	30	10	100	30	100	10	10k		100	5		2	1.5			100/.1				2(12)	
MMBTA14		1N	30							20k					(11)									

*V_{CES} #C_{cb}

TEST CONDITIONS (Apply to Tables 1 through 3):

(1) I_C = 0.1 mA, V_{CE} = 5 V, R_S = 1 kΩ, f = 10 Hz - 15.7 kHz
(2) I_C = 10 mA, I_{B1} = 3 mA, I_{B2} = 1 5 mA, V_{CC} = 3 V
(3) I_C = 50 mA, I_{B1} = I_{B2} = 5 mA, V_{CC} = 6 V
(4) $V_{BE(on)}$ at 1 mA, 5 V
(5) I_C = 0.1 mA, V_{CE} = 5 V, R_S = 10 kΩ, BW = 1 Hz, f = 100 Hz
(6) I_C = 0.1 mA, V_{CE} = 5 V, R_S = 3 kΩ, f = 1 kHz
(7) $V_{BE(on)}$ @ 10 mA, 5 V
(8) I_C = 0.1 mA, V_{CE} = 5 V, R_S = 10 kΩ, f = 10 Hz to 15.7 kHz
(9) $V_{BE(sat)}$ @ 10/.1
(10) $V_{BE(sat)}$ @ 10/.5

(continued)

TABLE 2 — EUROPEAN STANDARD TRANSISTORS

Transistor pinouts: 1-Base, 2-Emitter, 3-Collector.

Device	NPN/PNP	Marking	Maximum Ratings V_{CBO} (V)	V_{CEO} (V)	V_{EBO} (V)	I_C (mA)	I_{CBO} Max (nA) @ V_{CB} (V)	I_{EBO} Max (nA) @ V_{EB} (V)	h_{FE} Min	h_{FE} Max	@ I_C (mA)	$V_{BE(on)}$ Min (V)	$V_{BE(on)}$ Max (V)	$V_{CE(sat)}$ Max (V)	$V_{BE(sat)}$ Min (V)	$V_{BE(sat)}$ Max (V)	@ I_C/I_B (mA)	f_T Min (MHz)	@ I_C (mA)	t_{off} Max (ns)	NF Typ (dB)	C_{ob} Max (pF)
GENERAL PURPOSE																						
BCW60A	N	AA	32*	32	5	100	20	32	20	4	120	220	2	5	.55	.75	.35	.60	.85	10/.25	125	10	800	6	4.5
B		AB					**				180	310											(13)		
C		AC									250	460													
D		AD									380	630													
BCX70G		AG	45*	45	5	200	20	45	20	4	120	220	2	5	.55	.75	.35	.60	.85	10/.25	125	10	800	6	4.5
H		AH					**				180	310											(13)	(14)	
J		AJ									250	460													
K		AK									380	630													
BCW31		D1	30	20	5	100	100	20			110	220	2	5	.55	.70	.25			10/.5				10	4
BCW32		D2									200	450												(14)	
BCW33		D3									420	800													
BCW71		K1	50	45							110	220													
BCW72		K2									200	450													
BCW61A	P	BA	32*	32	5	200	20	32	20	5	120	220	2	5	.60	.75	.25	.60	.85	10/.25			800	6	6
B		BB					**				180	310											(13)	(14)	
C		BC									250	460													
D		BD									380	630													
BCX71A		BG	45*	45	5	200	20	45	20	5	120	220	2	5	.60	.75	.25	.60	.85	10/.25			800	6	6
B		BH					**				180	310											(13)	(14)	
C		BJ									250	460													
D		BK									380	630													
BCW29		C1	30*	20	5	100	100	20			120	260	2	5	.60	.75	.30			10/.5				10	7
BCW30		C2									215	500												(14)	
BCW69		H1	50*	45							120	260													
BCW70		H2									215	500													
HIGH CURRENT																									
BCX19	N	U1	50*	45	5	500	100	20	10μ	5	100	600	100	1		1.2	.62			500/50	200	10			5
BCX20		U2	30*	25												(15)					***				***
BCW65A		EA	60*	32	5	800	20	32	20	4	100	250	100	1					.2	500/50	100	20	400	10	12#
B		EB					**				160	400											(16)	(17)	
BCW66F		EF	75*	45				45			100	250													
G		EG									160	400													
BCX17	P	T1	50*	45	5	500	100	20	10μ	5	100	600	100	1		1.2	.62			500/50	100	10			8
BCX18		T2	30*	25												(15)					***				***
BCW67A		DA	45*	32	5	500	20	32	20	4	100	250	100	1			.70		2	500/50	100	80	400	10	18
B		DB									160	400											(16)	(17)	
BCW68F		DF	60*	45			(20)	45			100	250													
G		DG									160	400													

*V_{CES} **I_{CES} at V_{CES} ***Typ #C_{ob}

TEST CONDITIONS — continued

(11) $V_{BE(on)}$ at 100 mA, 5 V
(12) I_C = 1 mA, V_{CE} = 5 V, R_S = 100 kΩ, f = 1 kHz
(13) I_C = 10 mA, I_{B1} = I_{B2} = 1 mA, V_{CC} = 10 V
(14) I_C = 0.2 mA, V_{CE} = 5 V, R_G = 2 kΩ, f = 1 kHz, Δf = 200 Hz
(15) $V_{BE(on)}$ at 500 mA, 1 V
(16) I_C = 150 mA, I_{B1} = I_{B2} = 15 mA, R_L = 150 Ω,
(17) I_C = 0.2 mA, V_{CE} = 5 V, R_G = 1 kΩ, f = 1 kHz
(18) I_C = 3 mA, I_{B1} = I_{B2} = 1 mA, V_{CC} = 3 V
(19) I_C = 0.5 mA, V_{CE} = 6 V, f = 1 MHz, R_G = 500 Ω,
(20) I_{CES} at $V_{CES(test)}$ = 75% $V_{CES(max)}$

TABLE 3 — RF TRANSISTORS

Transistor pinouts: 1-Base, 2-Emitter, 3-Collector.

Device	NPN/PNP	Marking	BVCBO Min (V) (1)	BVCEO Min (V) (2)	BVEBO Min (V) (1)	I_{CBO} Max (nA)	h_{FE} Min	h_{FE} Max	@ I_C (mA)	& V_{CE} (V)	C_{cb} Max (pF)	@ V_{CB} (V)	f_T Typ (GHz)	& I_C (mA)	& V_{CE} (V)	NF Typ (dB)	@ I_C (mA)	& V_{CE} (V)	MAG (3) Typ (dB)	@ I_C (mA)	& V_{CE} (V)	f (4) (MHz)
MMBR901		7A	25	15		50	15	30	200	5	5	1	10	4	15	10	2.3	5	6	10.5	15	10	1000
MMBR920		7B	20		2	50	10	25	250	14	10	1	10	5	14	10	2.4	2	10	17	14	10	500
MMBR930		7C	15	12		50	5	25	250	30	5	1	10	5.5	30	5	1.9	2	5	15.5	30	5	500
MMBR931	N	7D	10	5*				30	150	.25	1	.5	1	3.5	1	1	2.7	.5	1	18	1	1	500
MMBR2060		7E	30	14	4	50	10	40	185	5	5	1	10	2.5	20	10	2.0	1.5	10	13	20	10	500
MMBR5031		7G	15	10	3	10	6	25	300	1	6	1.5	6	2	5	6	1.9	1	6	13.5	5	6	450
MMBR5179		7H	20	12	2.5	20	15	25	250	3	1	1	10	1.5	5	6	4.0	1.5	6	11.0	5	6	450
BFR92	N	P1	20	15	2	50	10	25		14	10	0.5	10	5.0	14	10	2.4	3	1.5				30
BFR93	N	R1	15	12	2	50	10	25		30	5	0.5	10	5.5	30	5	2.4	2	5.0				30
MMBR4957	P	7F	30	30	3	100	20	20	150	2	10	.8	10	2	2	10	2.5	2	10	14.5	2	10	450

*I_C = 100 μA

NOTES: (1) At 100 μA

(2) At 1 mA

(3) MAG = Maximum Available Gain (Common Emitter)

$$= \frac{|S_{21}|^2}{(1-|S_{11}|^2)(1-|S_{22}|^2)} \text{ (dB), with } S_{12} \text{ assumed to be zero.}$$

(4) Measurement frequency for NF and MAG.

TABLE 4 — JUNCTION FIELD-EFFECT TRANSISTORS

FET pinouts: 1-Drain, 2-Source, 3-Gate.

Device	N or P-Channel	Marking	$V_{(BR)GSS}$ Min (V)	I_{GSS} @ I_G (μA)	I_{GSS} Max (nA)	$V_{(GS)off}$ @ V_{GS} (V)	$V_{(GS)off}$ Min (V)	$V_{(GS)off}$ Max (V)	I_{DSS} @ I_D (nA)	I_{DSS} & V_{DS} (V)	I_{DSS} Min (mA)	I_{DSS} Max (mA)	y_{fs} @ V_{DS} (V)	y_{fs} Min (mmhos)	y_{fs} Max (mmhos)	NF @ V_{DS} (V)	NF Typ (dB)	NF @ f (MHz)	$r_{DS(on)}$ Max (ohms)	t_{off} Max (ns)
RF AMPLIFIERS																				
MMBF4416		6A	-30	-1	-.1	-20		5	1	15	5	15	15	4.5	7.5	15	2	100		
MMBF5484	N	6B	-25	-1	-1	-20	-.3	-3	10	15	1	5	15	3	6	15	2	100		
MMBFU310		6C			-.15	-15	-2.5	-6	1	10	24	60	10	10	18	10	1.5	100		
GENERAL PURPOSE																				
BFR30	N	M1	−25	−1.0	.2	−10		−5.0	0.5	10	4	10	10	1.0	4.0	10				
BFR31	N	M2	−25	−1.0	.2	−10		−2.5	0.5	10	1	5	10	1.5	4.5	10				
MMBF5457	N	6D	−25	−10	−1	−15	−.5	−6	10	15	1	5	15	1	5	15				
MMBF5460	P	6E	40	10	5	20	.75	6	1000	15	1	5	15	1	4	15	1	(1)		
CHOPPER/SWITCH																				
MMBF4393	N	6G	.30	−1.0	−1.0	−15	−0.5	−3	10	15	5	30	15						100	55(3)
MMBF4B60	N	6F	−30	−1	-.25	−20	−2	−6	.5	15	20	100	15						40	50(2)

NOTES (1) 100 Hz

(2) $I_{D(on)}$ = 10 mA, $V_{GS(on)}$ = 0, $V_{GS(off)}$ = 6 V, V_{DD} = 10 V

(3) $I_{D(DN)}$ = 3 mA $V_{GS(ON)}$ = 0, $V_{GS(off)}$ = 5 V, V_{DD} = 10 V

TABLE 5 — DIODES

(Dual unless otherwise noted)

Diode pinouts: As noted.

Device	Description	Marking	V_{BR} Min (V)	I_R @ I_{BR} (μA)	I_R Max (μA)	V_F @ V_R (V)	V_F Min (V)	V_F Max (V)	C_{VR} @ I_F (mA)	C_{VR} Max (pF)	t_{rr} Max (nsec)
EUROPEAN											
BAV70	Common Cathode (3)	A2	70	5	5	70		.855	10	1.5	6(1)
BAW56	Common Anode (5)	A1		2.5	2.5	70		1.1	50		6(1)
BAV99	Series (4)	A7									
BAV74	Common Cathode (3)	JA	50	5	.1	50		1.1	100	2	6(1)
U.S.											
MMBD6050	Single Diode (6)	5A	70	100	.1	50	.85	1.1	100	2.5	6(1)
MMBD6100	Common Cathode (3)	5B									10(1)
MMBD7000	Series (4)	5C									
MMBD914	Switching, Single (6)	5D	100	100	5 0.25	75 20		1	10	4	4(2)

NOTES: (1) $I_F = I_R = 10$ mA, $V_R = 5$ V, $I_{RR} = 1$ mA
(2) $I_F = I_R = 10$ mA, $V_R = 6$ V, $I_{RR} = 1$ mA
(3) Pinouts: 1-Anode, 2-Anode, 3-Cathode
(4) Pinouts: 1-Anode, 2-Cathode, 3-Cathode and Anode
(5) Pinouts: 1-Cathode, 2-Cathode, 3-Anode
(6) Pinouts: 1-Anode, 2-N.C., 3-Cathode

TABLE 6 — TUNING DIODES

Pinouts: 1-Anode, 2-N.C., 3-Cathode.

Device	Marking	BV_R Min (V)	I_R @ I_R (μA)	C_T Min (pF)	C_T Max (pF)	C_T @ V_R (V)	Capacitance Ratio Min	Capacitance Ratio Max	Q Min	Q @ V_R (V)	Q & f (mHz)	R_S Max (ohms)	V_F Max (V)	V_F @ I_F (mA)	I_R Max (μA)	I_R @ V_R (V)
TUNING DIODES																
MMBV105	4E	30	10	1.8	2.8	25	4	6	150	9 pF	100				.05	28
MMBV109	4A	30	10	26	32	3	5	6.5	280	3	50				.05	28
MMBV2097	4K	30	10	.8	1.2	4	2	2.6	325	4	100				.02	25
MMBV2098	4L	30	10	1.8	2.7	4	2	2.8	325	4	100				.02	25
MMBV2101	4G	30	10	6.1	7.5	4	2.5	3.3	450	4	50				.02	25
MMBV2103	4H	30	10	9.0	11	4	2.5	3.3	400	4	50				.02	25
MMBV2109	4J	30	10	29.7	36.3	4	2.7	3.3	200	4	50				.02	25
MMBV3102	4C	30	10	20	25	3	4.5		300	3	50				.1	25
"PIN" CHANNEL SWITCH																
MMBV3401	4D	35	10		1	20						.7			.1	25
HOT CARRIER DIODE																
MMBD101	4M	4	10		1	0							.6	10	.25	3

TABLE 7 — ZENER DIODES

Pinouts: 1-Anode, 2-N.C., 3-Cathode.
MMBZ Series @ ±5%

Device	Marking	V_Z (nom) @ I_{ZT} (Volts)	I_{ZT} (mA)	Max I_R @ V_R (Volts)	Max I_R (μA)	Max. Zener Impedence Z_{ZT} (ohms) @ I_{ZT}	Max. Zener Impedence Z_{ZK} (ohms) @ I_{ZK} = .25 mA
MMBZ5226	8A	3.3	20	0.95	25	28	1600
MMBZ5227	8B	3.6	20	0.95	15	24	1700
MMBZ5228	8C	3.9	20	0.95	10	23	1900
MMBZ5229	8D	4.3	20	0.95	5.0	22	2000
MMBZ5230	8E	4.7	20	1.9	5.0	19	1900
MMBZ5231	8F	5.1	20	1.9	5.0	17	1600
MMBZ5232	8G	5.6	20	2.9	5.0	11	1600
MMBZ5233	8H	6.0	20	3.3	5.0	7.0	1600
MMBZ5234	8J	6.2	20	3.8	5.0	7.0	1000
MMBZ5235	8K	6.8	20	4.8	3.0	5.0	750
MMBZ5236	8L	7.5	20	5.7	3.0	6.0	500
MMBZ5237	8M	8.2	20	6.2	3.0	8.0	500
MMBZ5238	8N	8.7	20	6.2	3.0	8.0	600
MMBZ5239	8P	9.1	20	6.7	3.0	10	600
MMBZ5240	8Q	10	10	7.6	3.0	10	600
MMBZ5241	8R	11	10	8.0	2.0	11	600
MMBZ5242	8S	12	10	8.7	1.0	12	600
MMBZ5243	8T	13	9.5	9.4	0.5	13	600
MMBZ5244	8U	14	9.0	9.5	0.1	15	600
MMBZ5245	8V	15	8.5	10.5	0.1	16	600
MMBZ5246	8W	16	7.8	11.4	0.1	17	600
MMBZ5247	8X	17	7.4	12.4	0.1	19	600
MMBZ5248	8Y	18	7.0	13.3	0.1	21	600
MMBZ5249	8Z	19	6.6	13.3	0.1	23	600
MMBZ5250	81A	20	6.2	14.3	0.1	25	600
MMBZ5251	81B	22	5.5	16.2	0.1	29	600
MMBZ5252	81C	24	5.2	17.1	0.1	33	600
MMBZ5253	81D	25	5.0	18.1	0.1	35	600
MMBZ5254	81E	27	4.6	20	0.1	41	600
MMBZ5255	81F	28	4.5	20	0.1	44	600
MMBZ5256	81G	30	4.2	22	0.1	49	600
MMBZ5257	81H	33	3.8	24	0.1	58	700

NOTES: (1) C5D (±10%) Series also available

TABLE 8 — EUROPEAN ZENER DIODES

Pinouts: 1-Anode, 2-N.C., 3-Cathode.

Marking		V_Z @ I_{ZT} (Volts) Min	V_Z @ I_{ZT} (Volts) Max	I_Z (mA)	Max I_R @ V_R (Volts)	Max I_R I_R (μA)	rdiff (ohms) (max) @ I_Z = 5 mA
BZX84C4V7	Z1	4.4	5.0	5	2	3	80
BZX84C5V1	Z2	4.8	5.4	5	2	2	60
BZX84C5V6	Z3	5.2	6.0	5	2	1	40
BZX84C6V2	Z4	5.8	6.6	5	4	3	10
BZX84C6V8	Z5	6.4	7.2	5	4	2	15
BZX84C7V5	Z6	7.0	7.9	5	5	1	15
BZX84C8V2	Z7	7.7	8.7	5	5	.7	15
BZX84C9V1	Z8	8.5	9.6	5	6	.5	15
BZX84C10	Z9	9.4	10.6	5	7	.2	20
BZX84C11	Y1	10.4	11.6	5	8	.1	20
BZX84C12	Y2	11.4	12.7	5	8	.1	25
BZX84C13	Y3	12.4	14.1	5	8	.1	30
BZX84C15	Y4	13.8	15.6	5	10.5	.05	30
BZX84C16	Y5	15.3	17.1	5	11.2	.05	40
BZX84C18	Y6	16.8	19.1	5	12.6	.05	45
BZX84C20	Y7	18.8	21.2	5	14	.05	55
BZX84C22	Y8	20.8	23.3	5	15.4	.05	55
BZX84C24	Y9	22.8	25.6	5	16.8	.05	70
BZX84C27	Y10	25.1	28.9	2	18.9	.05	80(1)
BZX84C30	Y11	28.0	32.0	2	21	.05	80(1)
BZX84C33	Y12	31.0	35.0	2	23.1	.05	80(1)

NOTES: (1) rdiff @ I_Z = 2 mA

23

SOIC Miniature IC Plastic Package

In order to overcome the physical size constraint sometimes encountered with standard plastic dual-in-line package, we have developed the small outline (SO) package.
The SOIC's complement existing Discrete products in the SOT23 and SOT89 enabling Motorola to present hybrid customers with the most complete range of semiconductors devices in microminiature package available from the Industry to-day.

The reasons of the success:

- Size reduction 2.5/1
- Easy to handle
- Same performances as the standard DIP

TABLE 9 – SINGLE/DUAL OP AMPS, COMPARATORS, TIMERS

DEVICE NUMBER	DESCRIPTION
LM201AD	General Purpose Operational Amplifier
LM258D	Dual Op. Amps
LM301AD	General Purpose Op. Amp
LM308D	Precision Op. Amp
LM308AD	Precision Op. Amp
LM311D	Voltage Comparator
LM358D	Dual Op. Amp
LM2904D	Dual Op. Amp
MC1436CD	High Voltage Op. Amp
MC1436D	High Voltage Op. Amp
MC1455D	Timing Circuit
MC1458CD	Dual Op. Amp
MC1458D	Dual Op. Amp
MC1741CD	General Purpose Op. Amp
MC1748CD	General Purpose Op. Amp
MC1776CD	Programmable Op. Amp
MC4558CD	Dual High Frequency Op. Amp
MC34001D	Single Trimfet Op. Amp
MC34002D	Dual Trimfet Op. Amp

SO8

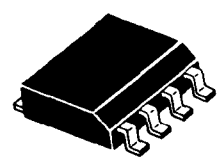

Case 751 D Suffix

TABLE 10 – QUAD OP AMPS/COMPARATORS, MODULATOR/DEMODULATOR, PRECISION VOLTAGE REGULATOR

DEVICE NUMBER	DESCRIPTION
LM224D	Quad Op. Amp
LM239D	Quad Comparator
LM324D	Quad Op. Amp
LM339D	Quad Comparator
LM348D	Quad Op. Amp
LM2901D	Quad Comparator
LM2902D	Quad Op. Amp
MC1496D	Modulator/Demodulator
MC1723CD	Adjustable Positive or Negative Volt. Reg.
MC3302D	Quad Comparator
MC3403D	Quad Op. Amp
MC1741CD	Quad Op. Amp
MC34004D	Quad Trimfet Op. Amp
MC3346D	General Purpose Transistor Array
MC3386D	General Purpose Transistor Array

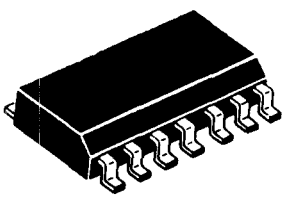

SO14

Case 751A D Suffix

23

TABLE 11 – 8 BIT MULTIPLYING D/A CONVERTER

DEVICE NUMBER	DESCRIPTION
DAC08D	8 Bit Multiplying Dig. to Analog Converter
MC1408D6	8 Bit Multiplying Dig. to Analog Converter
MC1408D7	8 Bit Multiplying Dig. to Analog Converter
MC1408D8	8 Bit Multiplying Dig. to Analog Converter
TDA1085AD	Universal Motor Speed Control
MC3357D	Low Power FMIF

Note: The MC1408D has a different pin out than the standard plastic or ceramic packaged devices.

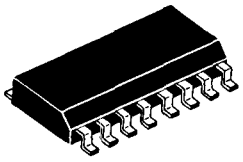

SO16

Case 751B D Suffix

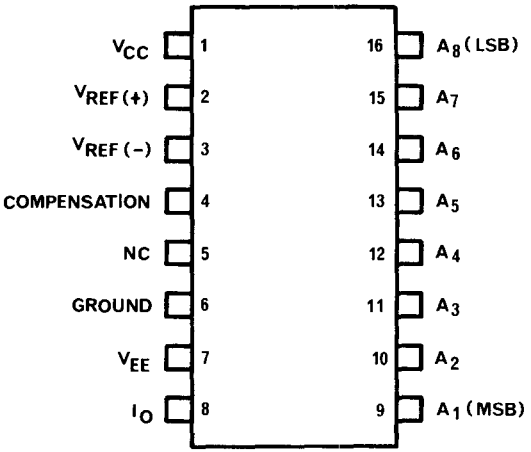

MC1408-8D

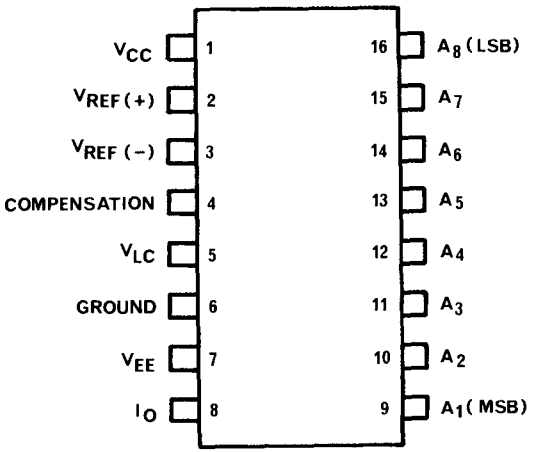

DAC08D

Table of Contents

	Page
General Processes	
CECC Processing	24- 2
MIL Processing	24- 3
Selector Guide	
Discretes CECC 50000 and MIL–STD–750	24- 4
Discretes and Linear European QPL	24- 5
Discretes US QPL	24- 6
Linear CECC 90000 and MIL–STD–883	24- 8
NMOS CECC 90000 and MIL–STD–883	24- 9
CMOS BS 9000, CECC 90000, MIL–STD–883 and JM 38510	24-10
TTL-LS CECC 90000, MIL–STD–883 and JM 38510	24-12
ECL CECC 90000, MIL–STD–883 and JM 38510	24-14
HI-REL Processing	
Linear CECC 90000	24-16
Linear MIL–STD–883	24-17
TTL-LS and ECL CECC 90000	24-18
TTL-LS and ECL MIL–STD–883	24-19
CMOS BS 9000	24-20
CMOS and NMOS CECC 90000	24-21
CMOS and NMOS MIL–STD–883	24-22
DISCRETES CECC 50000	24-23
DISCRETES MIL–STD–750	24-24

MOTOROLA

These tables summarize the CECC 50000, CECC 90000, MIL-STD-750 and MIL-STD-883 programs. The sequence of the screen, test method, and condition details briefly describe the processing for discrete and integrated circuit semiconductors.

INTEGRATED CIRCUITS – processed according to CECC 90000

Test N°	Screen	CECC 90000 Test Method	Details and conditions	Class B	Class C
1	Internal visual (precap) inspection	4.2.1	CECC90000 appendix A	100 %	100 %
2	Stabilization bake	4.6.1.1	24H at max. rated storage temperature	100 %	100 %
3	Temperature cycling	4.6.8.1	10 cycles 15min each at min max storage temperature	100 %	100 %
4	Constant acceleration	4.6.7	As specified and according IEC 68-2-7 value 30000G (note 1) 1 minute	100 %	100 %
5	Hermetic seal a) fine b) gross	 4.6.9.1 4.6.9.2	Tracer gas method according IEC 68-2-17 test Qk Bubble test according IEC 68-2-17 test Qc	100 %	100 %
6	Burn-in		Duration T=168H tolerance: -8H T=Tmax operating or equivalent (145°C at 87H)	100 %	–
7	Final electrical test	Per Motorola data sheet or CECC detail specification	As specified by test matrix	100 %	100 %
8	Quality conformance Group A Elitrical inspection Group B, C	Applicable specification	According to subgroup A2, A3, A4a, A4b, A5, of detail specification	Sampling	Sampling
9	External visual	4.2.2	4.2.2	100 %	100 %

DISCRETES – processed according to CECC 50000

Test N°	Screen	CECC 50000 Test Method	Details and conditions	Class A	Class B
1	Internal visual (precap)	Appendix 6 paragraph 4		100 %	–
2	High temperature stabilization bake	4.4.1	24H at max. rated storage temperature	100 %	100 %
3	Temperature cycling	4.4.4	5 cycles 30 min. each at min max storage temperature	100 %	100 %
4	Constant acceleration	IEC 68-2-7	As specified and according IEC 68-2-7 and IEC 147-5 (note 1)	100 %	100 %
5	Hermetic seal	4.4.10	A) fine leak: Qk or radio isotope B) gross leak: Qc	100 %	100 %
6 6.1 6.2	Interim electrical test By variables By attribut		 Read and record initial values Check if values are within limits of group A.	 100 % –	 – 100 %
7	Burn-in		Duration in hours: Tolerances:	168 –8	72 –4
8 8.1 8.2	Final electrical test By variable By attribut		 Per detail specification delta parameter according CECC 50000 annex VI paragraph 3 Check if values are within limit of group A.	 100 % –	 – 100 %
9	Quality conformance Group A		Per generic CECC 50000 Level F	Sampling	Sampling

HI-REL PROCESSING SUMMARY

Complete screening procedures are documented in this brochure for TTL-LS, ECL, LINEAR, CMOS, NMOS and DISCRETES (pages 24. 16-25) Also, the processing options are described. Special processing options can be negociated with product marketing engineers.

INTEGRATED CIRCUITS – processed according to MIL – STD – 883

Test N°	Screen	MIL-STD-883 method	Condition	Class B	Class C
1	Internal visual (precap) inspection	2010	Condition B	100 %	100 %
2	Stabilization bake	1008	24H at max rated storage temperature	100 %	100 %
3	Temperature cycling	1010	10 cycles 10min. each at min max storage temperature	100 %	100 %
4	Constant acceleration	2001	Y1 axis at 30000G min (1)	100 %	100 %
5	Burn-in	1015	160H at TA = 125°C or equivalent	100 %	–
6	Final electrical tests	per Motorola Data sheet	Static tests at 25°C Funclinal test at 25°C for digital only	100 %	100 %
7	Hermetic seal a) fine b) gross	1014	 Condition A or B Condition C or Fluorcarbon bubble bath method	100 %	100 %
8	Quality conformance Group A Electrical inspection group B, C,		Static tests at 25°C functional test at 25°C (for digital only) static tests at max. and min. rated operating temperatures dynamic tests at 25°C 5005 Class B	AQL Level II Optional	AQL Level II Optional
9	External visual	2009		100 %	100 %

DISCRETES – processed according to MIL – STD – 750

Test N°	Screen	MIL-STD-750 method	Condition	Level A	Level B
1	Internal visual (precap) Inspection	2072 2074	For transistors For Diodes	100 % 100 %	– –
2	High temperature stabilization bake	1032	24H at max rated storage temperature	100 %	100 %
3	Temperature cycling	1051	10 cycles 15mns each at min max storage temperature	100 %	100 %
4	Constant acceleration	2006	Y1 axis at 20000G min or 10000G for devices with P_D> 10W at T_C = 25° C	100 %	100 %
5	Serialization			100 %	–
6	High temperature reverse bias (HTRB)	1038 1039	For Diodes For transistors Condition A	Optional	Optional
7	Interim electest		As specified By variables (read and record)	 100 %	 –
8	Power burn-in	1038 1039 1040	For Diodes Condition B For Transistors Condition B For Thyristors Condition B	 100 % 160H	 100 % 160H
9	Final electrical test	Per Motorolat data sheet	As specified – by variables (read and record) – by attributs (GO NO GO)	 100 % –	 – 100 %
10	PDA (lot acceptance)		Applicable on electrical rejects found on pos. 9	10 % max	10 % max
11	Hermetic seal A) fine B) gross	 1071	 Condition G or H Condition C	 100 %	 100 %
12	Radiography	2076		100 %	–
13	Electrical group A inspection (Quality conformance)		 DC parameters TA = 25° C DC parameters at high and low temperature Dynamic tests at TA = 25° C AC test at TA = 25° C	AQL 0.4 % Level II 0.65 % Level S3 0.65 % Level S3 0.65 % Level S3	
14	External visual examination	2071	To be performed after complete marking	100 %	100 %
15	Quality conformance Group B test			Optional	Optional

24

DISCRETES

CECC 50000 and MIL-STD-750 N – processed devices most popular in Europe. Additional discrete products are being added to this list as the market needs broaden.

DEVICE TITLE	FUNCTIONAL DESCRIPTION	CECC 50000 PROCESSED Class	MIL-STD-750 PROCESSEO Class
IN 827	Zener Reference Diode	A, B	A, B
IN 3893	12A Fast Recovery Rectifier DO4	A, B	A, B
IN 3913	30A Fast Recovery Rectifier DD5	A, B	A, B
IN 4725	3A Amplifier	A, B	A, B
70 HF 100	70A Rectifier	A, B	A, B
MR 836	3A Fast Recovery Rectifier	A, B	A, B
BYS08-50	5A Schottky Rectifier	A, B	A, B
BYS35-50	35A Schottky Rectifier DD4	A, B	A, B
BYS60-50	60A Schottky Rectifier DO5	A, B	A, B
BYS75-50	75A Schottky Rectifier DO5	A, B	A, B
BYX38-120	6A Rectifier DO4	A, B	A, B
BYX42-120	12A Rectifier DO4	A, B	A, B
SD41	30A Schottky Rectifier DO5	A, B	A, B
SD51	60A Schottky Rectifier DO5	A, B	A, B
2N 930	NPN Low Noise TO18	A, B	A, B
2N 1711	NPN General Purpose TO39	A, B	A, B
2N 1893	NPN General Purpose TO39	A, B	A, B
2N 2219A	NPN Amplifier and Switch TO39	A, B	A, B
2N 2222A	NPN Amplifier and Switch TO18	A, B	A, B
2N 2369A	NPN Amplifier and Switch TO18	A, B	A, B
2N 2646	Unijunction TO18	A, B	A, B
2N 2647	Unijunction TO18	A, B	A, B
2N 2905A	PNP Amplifier and Switch TO39	A, B	A, B
2N 2907A	NPN Amplifier and Switch TO18	A, B	A, B
2N 2990	NPN Dual Transistor TO78	A, B	A, B
2N 3019	NPN Amplifier TO39	A, B	A, B
2N 3439	NPN High Voltage TO39	A, B	A, B
2N 3501	NPN High Voltage TO39	A, B	A, B
2N 3637	PNP High Voltage TO39	A, B	A, B
2N 3810	PNP Dual Transistor TO78	A, B	A, B
2N 4033	PNP Amplifier TO39	A, B	A, B
2N 3716	NPN 80V 10A TO3	A, B	A, B
2N 3792	PNP 80V 10A TO3	A, B	A, B
2N 4898	PNP 40V 4A TO66	A, B	A, B
2N 3055	NPN 60V 15A TO3	A, B	A, B
2N 3585	NPN 60V 15A TO3	A, B	A, B
2N 3767	NPN 80V 4A TO66	A, B	A, B
2N 3741	PNP 80V 4A TO66	A, B	A, B
2N 4900	PNP 80V 4A TO66	A, B	A, B
2N 4912	NPN 80V 4A TO66	A, B	A, B
2N 6275	NPN 120V 50A TO3	A, B	A, B
2N 5682	NPN 120V 1A TO39	A, B	A, B
MJ 2501	PNP 80V 10A DARLINGTON TO3	A, B	A, B
BUX 48	NPN High Voltage Switch TO3	A, B	A, B

DISCRETES AND LINEAR

QUALIFIED PRODUCT LIST – MOTOROLA devices which appear in **QPL CECC 00200, QPL UTE C00191, and QPL ESA / SCC.**

CECC 00200/DEVICE TITLE	UTEC 00191/DEVICE TITLE	ESA/SCC/DEVICE TITLE
2N 1613	2N 1613	2N 2219A
2N 1711	2N 1711	
2N 1893	2N 1893	2N 2222A
2N 2218	2N 2218	2N 2907A
2N 2218A	2N 2218A	
2N 2219	2N 2219	2N 3439
2N 2219A	2N 2219A	2N 3501
2N 2221	2N 2221	
2N 2221A	2N 2221A	
2N 2222	2N 2222	
2N 2222A	2N 2222A	
2N 2369	2N 2906	
2N 2369A	2N 2906A	
2N 2484	2N 2907	
2N 2904	2N 2907A	
2N 2904A	2N 3055	
2N 2905	2N 3713	
2N 2905A	2N 3714	
2N 2906	2N 3715	
2N 2906A	2N 3716	
2N 2907	2N 3789	
2N 2907A	2N 3790	
BC 107	2N 3791	
BC 108	2N 3792	
BC 109		
CV 8616	MC 1741G	
CV 9507	LM 101AH	
CV 9543		
PO 7726		

QPL CECC 00200: Components qualified per CECC 50 XXX-YYY specification.
QPL UTEC 00191: Components qualified per UTEC 96 XXX-YYY.
QPL ESA/SCC: European Space Agency/Space Components Coordination Group. Components qualified per SCC 5 XXX-YYY specification.

QUALIFIED PRODUCT LIST – MOTOROLA devices which appear in QPL 19500 and are available in JAN, JANTX, and JANTXV versions as specified

DEVICE TITLE	Detail spec.
**1N746A	127H
thru	
**1N758A	
**1N759A	127H
**1N746A-1	127H
thru	
**1N758A-1	
**1N759A-1	127H
**1N821	159D
**1N823	159D
**1N825	159D
**1N827	159D
**1N829	159D
**1N935B	156E
**1N937B	156E
**1N938B	156E
**1N939B	156E
**1N941B	157F
**1N943B	157F
**1N944B	157F
**1N945B	157F
**1N962B	117F
thru	
**1N984B	
**1N985B	117F
thru	
**1N991B	
**1N992B	117F
**1N962B-1	117F
thru	
**1N984B-1	
**1N2804B	114E
thru	
**1N2811B	
**1N2804B	
thru	
**1N2811RB	
**1N2813B	
**1N2813RB	
**1N2814B	
**1N2814RB	
**1N2816B	114E
**1N2816RB	
**1N2818B	
thru	
**1N2820B	
**1N2818RB	
thru	
**1N2820RB	
**1N2822B	
thru	
**1N2827B	
**1N2822RB	
thru	
**1N2827RB	

DEVICE TITLE	Detail spec.
**1N2829B	
**1N2829RB	
**1N2831B	
thru	
**1N2838B	
**1N2831RB	
thru	
**1N2838RB	
**1N2840B	
thru	
**1N2846B	
**1N2840RB	114E
thru	
**1N2846RB	
**1N2970B	124F
thru	
**1N2977B	
**1N2970RB	
thru	
**1N2977RB	
**1N2979B	
**1N2979RB	
**1N2980B	
**1N2980RB	
**1N2982B	
**1N2982RB	
**1N2984B	
thru	
**1N2986B	
**1N2984RB	
thru	
**1N2986RB	
**1N2988B	124F
thru	
**1N2993B	
**1N2988RB	
thru	
**1N2993RB	
**1N2995B	
**1N2995RB	
**1N2997B	
**1N2997RB	
**1N2999B	
thru	
**1N3005B	
**1N2999RB	
thru	
**1N3005RB	
**1N3007B	
thru	
**1N3009B	
**1N3007RB	
thru	
**1N3009RB	
**1N3011B	
**1N3011RB	
**1N3012B	
**1N3012RB	
**1N3014B	
**1N3014RB	

DEVICE TITLE	Detail spec.
**1N3015B	
**1N3015RB	
**1N3016B	115F
thru	
**1N3043B	
**1N3044B	115F
thru	
**1N3051B	
**1N3154	158F
thru	
**1N3157	
*1N3305B	358B
thru	
*1N3312B	
*1N3305RB	
thru	
*1N3312RB	
*1N3314B	
*1N3314RB	358B
*1N3315B	
*1N3315RB	
*1N3317B	
*1N3317RB	
*1N3319B	
*1N3319RB	
*1N3320B	
*1N3320RB	
*1N3321B	
*1N3321RB	
*1N3323B	
thru	
*1N3328B	
*1N3323RB	
thru	
*1N3328RB	
*1N3330	
*1N3330RB	
*1N3332B	
*1N3332RB	
*1N3334B	
thru	
*1N3339B	
*1N3334RB	
thru	
*1N3339RB	
*1N3340B	
*1N3340RB	
*1N3342B	
*1N3342RB	
*1N3343B	
*1N3343RB	
*1N3344B	
*1N3344RB	
*1N3346B	
*1N3346RB	
*1N3347B	
*1N3347RB	
*1N3349B	
*1N3349RB	
*1N3350B	

DEVICE TITLE	Detail spec.
*1N3350RB	
**1N3821A	115F
thru	
**1N3828A	
**1N3890, R	304A
**1N3893, R	
*1N3910, R	308A
thru	
*1N3913, R	
**1N3991, R	304A
*1N3993A	272C
thru	
*1N4000A	
*1N3993RA	272C
thru	
*1N4000RA	
**1N4099	435
*1N4554B	
*1N4549RB	
thru	
*1N4554RB	
**1N4557B	114D
thru	
**1N4562B	
**1N4557RB	
thru	
**1N4562RB	
**1N4565A	452
thru	
**1N4574A	
**1N4614	435
thru	
**1N4627	
**1N5283	463A
thru	
**1N5314	
*1N5518B	437
thru	
*1N5529B	
*1N5530B	
*1N5531B	
thru	
*1N5546B	

*Approved to supply TX devices.
**Approved to supply TX and TXV devices.

QUALIFIED PRODUCT LIST – MOTOROLA devices which appear in QPL 19500 and are available in JAN, JANTX, and JANTXV versions as specified

DEVICE TITLE	Detail spec.	DEVICE TITLE	Detail spec.	DEVICE TITLE	Detail spec.	DEVICE TITLE	Detail spec.
2N703	153B	**2N3440	368A	**2N3959	399	**2N6116	493
2N706	120C	*2N3444	347	**2N3960	399	**2N6117	493
*2N708	312B	*2N3444S	347	**2N4033	512	**2N6118	493
**2N718A	181C	**2N3467	348B	2N4199	372A	**2N6283	504
*2N859A	283B	**2N3468	348B	2N4200	372A	**2N6284	504
*2N914	373A	*2N3485A	392A	2N4201	372A	**2N6286	505
2N916	271A	*2N3486A	392A	2N4202	372A	**2N6287	505
**2N918	301B	**2N3498	366A	2N4203	372A	**2N6306	498
*2N929	253B	**2N3499	366A	2N4204	372A	**2N6308	498
*2N930	253B	**2N3500	366A	**2N4261	511	**2N6383	523
2N1132	177C	**2N3501	366A	**2N4399	433B	**2N6384	523
**2N1613	181C	**2N3506	349A	*2N4405	448	**2N6385	523
**2N2060	270C	**2N3507	349A	**2N4449	317D	**2N6546	525
**2N2218	251G	**2N3553	341B	*2N4453	283B	**2N6547	525
**2N2218A	251G	**2N3634	357B	**2N4854	421	**2N6603	522
**2N2219	251G	**2N3635	357B	**2N4856	385	**2N6604	522
**2N2219A	251G	**2N3636	357B	**2N4357	385	**2N6648	527
**2N2221	255F	**2N3637	357B	**2N4858	385	**2N6649	527
**2N2221A	255F	**2N3700	391A	**2N4859	385	**2N6650	527
**2N2222	255F	**2N3715	408C	**2N4860	385		
**2N2222A	255F	**2N3716	408C	**2N4861	385		
§2N2222A	255F	**2N3735	395A	**2N4930	397		
**2N2369A	317E	**2N3737	395A	**2N4931	397		
*2N2481	268C	**2N3739	402A	**2N4948	388		
2N2608	295A	**2N3740	441A	**2N4949	388		
2N2609	296A	**2N3741	441A	**2N4957	426		
**2N2857	343A	**2N3743	397	**2N5109	453		
**2N2904	290C	**2N3762	396B	**2N5302	456B		
**2N2904A	290C	**2N3763	396B	**2N5303	456B		
**2N2905	290C	**2N3764	396B	*2N5431	425		
**2N2905A	290C	**2N2765	396B	*2N5581	423		
**2N2906	291C	**2N3766	518	*2N5582	423		
**2N2906A	291C	**2N3767	518	**2N5683	466		
**2N2907	291C	**2N3791	379C	**2N5684	466		
**2N2907A	291C	**2N3792	379C	**2N5685	464		
*2N3013	287B	**2N3810	336B	**2N5686	464		
**2N3019	391A	**2N3811	336B	**2N5745	433B		
**2N3019S	391A	**2N3821	375A	**2N5793	495		
**2N3250A	323A	**2N3822	375A	**2N5794	495		
**2N3251A	323A	**2N3823	375A	**2N5795	496		
**2N3253	347	**2N3866	398	**2N5796	496		
*2N3253S	347	**2N3866A	398	**2N6051	501		
*2N3330	378A	**2N3867	350A	**2N6052	501		
**2N3375	34[illegible]B	**2N3867S	350A	**2N6058	502		
**2N3439	368A	**2N3868	350A	**2N6059	502		
		**2N3868S	350A				

* Approved to supply TX devices

** Approved to supply TX and TXV devices

§ Approved to supply JANS devices

24

CECC 90000 and MIL–STD–883

Processed devices most popular in Europe. Additional linear products are being added to this list as the market needs broaden.

DEVICE TITLE	FUNCTIONAL OESCRIPTION	CECC90000 PROCESSED Class	883 PROCESSED Class
MC1741L	Internal compensated general purpose operational amplifier, ceramic DIL	B,C	B,C
MC1741G	Internal compensated general purpose operational amplifier, metal can	B,C	B,C
LM101AJ	General purpose adjustable operational amplifier, ceramic DIL	B,C	B,C
LM101AH	General purpose adjustable operational amplifier, metal can	B,C	B,C
LM108J	Precision operational amplifier, ceramic DIL	B,C	B,C
LM108H	Precision operational amplifier, metal can	B,C	B,C
LM108AJ	Precision operational amplifier, ceramic DIL	B,C	B,C
LM108AH	Precision operational amplifier, metal can	B,C	B,C
LF157J	Monolithic J-FET operational amplifier, ceramic DIL	B,C	B,C
LF157H	Monolithic J-FET operational amplifier, metal can	B,C	B,C
MC1723L	Adjustable positive or negative voltage regulator, ceramic DIL	B,C	B,C
MC1723G	Adjustable positive or negative voltage regulator, metal can	B,C	B,C
MC1555L	Timing circuit, ceramic DIL	B,C	B,C
MC1555G	Timing circuit, metal can	B,C	B,C
MC1590L	Wide band amplifier with AGC, ceramic DIL	B,C	B,C
MC1590G	Wide band amplifier with AGC, metal can	B,C	B,C
MC1596L	Balanced modulator/demodulator, ceramic DIL	B,C	B,C
MC1596G	Balanced modulator/demodulator, metal can	B,C	B,C
MC8T26AL	Quad tri-state bus transceiver, ceramic DIL	B,C	B,C
MMH0026L	Dual MOS clock driver, ceramic DIL	B,C	B,C
MMH0026G	Dual MOS clock driver, metal can	B,C	B,C
LM139J	Quad comparator, ceramic DIL	B,C	B,C
MC26S10L	Quad Open-collector bus transceiver, ceramic DIL	B,C	B,C

For other device availability contact Product Marketing.
Device available only in ceramic or metal can package.

NMOS

CECC 90000 and MIL–STD–883

Processed devices most popular in Europe. Additional memories, microprocessors and peripherals are being added to this list as the market needs broaden.

DEVICE TITLE	FUNCTIONAL DESCRIPTION	CECC 90000 PROCESSED Class	883 PROCESSED Class
MC6800	1 MHz microprocessor	82-Q4	B,C
MC68A00	1.5 MHz microprocessor	82-Q4	B,C
MC6802	1 MHz MPU Clock RAM	82-Q4	B,C
MC6809	1 MHz Hi-Performance MPU Clock	82-Q4	B,C
MC6821	1 MHz Peripheral Interface Adapter	82-Q4	B,C
MC68A21	1.5 MHz Peripheral Interface Adapter	82-Q4	B,C
MC6840	1 MHz Programmable Timer	82-Q4	B,C
MC68A40	1.5 MHz Programmable Timer	82-Q4	B,C
MC6850	1 MHz Asynchronous Comm. Interface Adapter	82-Q4	B,C
MC68A50	1.5 MHz Asynchronous Comm. Interface Adapter	82-Q4	B,C
MC6852	1 MHz Synchronous Serial Data Adapter	82-Q4	B,C
MC68A52	1.5 MHz Synchronous Serial Data Adapter	82-Q4	B,C
MC6854	1 MHz Advanced Data Link Controller	82-Q4	B,C
MC68A54	1.5 MHz Advanced Data Link Controller	82-Q4	B,C
MC146805E2	CMOS 8-bit MPU	TBA	TBA
MC68000-4	16 bit microprocessor, 4 MHz	TBA	B,C
MC68000-6	16 bit microprocessor, 6 MHz	TBA	B,C
MC68000-8	16 bit microprocessor, 8 MHz	TBA	B,C
MC68000-10	16 bit microprocessor, 10 MHz	TBA	B,C
MC68120	Intelligent Peripheral Controller	TBA	TBA
MC68230-8	Parallel Interface/Timer, 8 MHz	TBA	TBA
MC68230-10	Parallel Interface/Timer, 10 MHz	TBA	TBA
MC68451-4	Memory Management, 4 MHz	TBA	TBA
MC68451-6	Memory Management, 6 MHz	TBA	TBA
MC68451-8	Memory Management, 8 MHz	TBA	TBA
MC68451-10	Memory Management, 10 MHz	TBA	TBA
MCM2114	1K×4 NMOS Static RAM, 250, 300 and 450 nsec	B,C	B,C
MCM21L14	Low Power 1K×4 MOS Static RAM, 250, 300 and 450 nsec	B,C	B,C
MCM2816	2K×8 NMOS EEROM, 350 and 450 nsec	TBA	TBA
MCM3832	4K×8 HMOS EEROM, 350 and 450 nsec	TBA	TBA
MCM4027	4K×1 NMOS Dynamic RAM, 200 and 250 nsec	B,C	B,C
MCM65116	2K×8 CMOS Static RAM, 200 nsec	TBA	TBA
MCM6665	64K Dynamic RAM, 200 nsec	B,C	B,C
MCM6810	450 ns, 128×8 NMOS Static RAM	B,C	B,C
MCM68A10	360 ns, 128×8 NMOS Static RAM	B,C	B,C
MCM68316A	350 ns, 2K×8 NMOS Binary ROM	B,C	B,C
MCM68316E	350 ns, 2K×8 NMOS Binary ROM	B,C	B,C
MCM68332	350 ns, 4K×8 NMOS Binary ROM	B,C	B,C
MCM68A364	350 ns, 8K×8 NMOS Binary ROM	B,C	B,C
MCM68B364	250 ns, 8K×8 NMOS Binary ROM	B,C	B,C

* Contact Hi-Rel product marketing concerning screening and temperature availability.

CMOS

DEVICE TITLE	FUNCTIONAL DESCRIPTION	BS9000 CATEGORY S2 and S3	CECC90000 PROCESSED Class	883 PROCESSED Class	JM 38510 QUALIFIED Slash Sheet N°
MC14000UB	Dual 3-Input NOR Gate	Q+	B,C	B,C	
MC14001UB	Quad 2-Input NOR Gate	Q+	B,C	B,C	05202 BCB
MC14001B	Quad 2-Input NOR Gate	Q	B,C	B,C	
MC14002UB	Dual 4-Input NOR Gate	Q+	B,C	B,C	05203 BCB
MC14002B	Dual 4-Input NOR Gate	Q	B,C	B,C	
MC14006B	18-Bit Static Shift Register	Q	B,C	B,C	05701 BCB
MC14007UB	Dual Pair + Inverter	Q	B,C	B,C	
MC14008B	4-Bit Adder	Q	B,C	B,C	
MC14011UB	Quad 2-Input NAND Gate	Q	B,C	B,C	05001 BCB
MC14011B	Quad 2-Input NAND Gate	Q+	B,C	B,C	
MC14012UB	Dual 4-Input NAND Gate	Q	B,C	B,C	05002 BCB
MC14012B	Dual 4-Input NAND Gate	Q+	B,C	B,C	
MC14013B	Dual D Flip-Flop	Q	B,C	B,C	05101 BCB
MC14014B	8-Bit Static Shift Register	Q	B,C	B,C	05702 BEB
MC14015B	Dual 4-Bit Static Shift Register	Q	B,C	B,C	05703 BEB
Mc14016B	Quad Analog Switch/Quad Mult.	Q	B,C	B,C	05801 BCB
MC14017B	Decade Counter/Divider	Q	B,C	B,C	
MC14018B	Presettable Divide-By-N Counter	Q	B,C	B,C	05602 BEB
MC14020B	14-Bit Binary Counter	Q	B,C	B,C	05603 BEB
MC14021B	8-Bit Static Shift Register	Q	B,C	B,C	05704 BEB
MC14022B	Octal Counter/Divider	Q	B,C	B,C	
MC14023UB	Triple 3-Input NAND Gate	Q+	B,C	B,C	05003 BCB
MC14023B	Triple 3-Input NAND Gate	Q	B,C	B,C	
MC14024B	Seven Stage Ripple Counter	Q	B,C	B,C	05605 BCB
MC14025UB	Triple 3-Input NOR Gate	Q+	B,C	B,C	05204 BCB
MC14025B	Triple 3-Input NDR Gate	Q	B,C	B,C	
MC14027B	Dual J-K Flip-Flop	Q	B,C	B,C	05102 BEB
MC14028B	BCD-to-Decimal Decoder	Q	B,C	B,C	
MC14029B	4-Bit Preset, Up/Down Counter	Q	B,C	B,C	
MC14030B	Quad Exclusive OR Gate	Q	B,C	B,C	05303 BCB
MC14032B	Triple Serial Adder (Pos)	Q	B,C	B,C	
MC14034B	8-Bit Universal Bus Register	Q	B,C	B,C	
MC14035B	4 Stage Shift Register	Q	B,C	B,C	
MC14038B	Triple Serial Adder (Neg)	Q	B,C	B,C	
MC14040B	12-Bit Binary Counter	Q	B,C	B,C	
MC14042B	Quad Latch	Q	B,C	B,C	
MC14043B	Quad NOR R-S Latch	Q	B,C	B,C	
MC14044B	Quad NAND R-S Latch	Q	B,C	B,C	
MC14046B	Phased Locked Loop	Q	B,C	B,C	
MC14049UB	Hex Inverter/Buffer	Q	B,C	B,C	05803 BEB
MC14050B	Hex Buffer	Q	B,C	B,C	05504 BEB
MC14051B	8 Channel Multiplexer	Q	B,C	B,C	
MC14052B	Dual 4 Channel Multiplexer	Q	B,C	B,C	
MC14053B	Triple 3 Channel Multiplexer	Q	B,C	B,C	
MC14066B	Quad Bilateral Switch	Q	B,C	B,C	05802 BCB
MC14068B	8-Input NAND Gate	Q	B,C	B,C	
MC14069UB	Hex INverter	Q	B,C	B,C	
MC14070B	Quad Exclusive OR Gate	Q	B,C	B,C	17203 BCB
MC14071B	Quad 2-Input OR Gate	Q+	B,C	B,C	
MC14072B	Dual 4-Input OR Gate	Q	B,C	B,C	
MC14073B	Triple 3-Input AND Gate	Q	B,C	B,C	17003 BCB
MC14075B	Triple 3-Input OR Gate	Q	B,C	B,C	
MC14076B	Quad D Type Register	Q	B,C	B,C	
MC14077B	Quad Exclusive NOR Gate	Q	B,C	B,C	
MC14078B	8-Input NOR Gate	Q	B,C	B,C	
MC14081B	Quad 2-Input AND Gate	Q+	B,C	B,C	17001 BCB
MC14082B	Dual 4-Input AND Gate	Q	B,C	B,C	17002 BCB
MC14093B	Quad 2-Input and Schmitt Trigger	Q	B,C	B,C	
MC14094B	8-Bit Bus Compat. Shift Store Latch	Q	B,C	B,C	
MC14099B	8-Bit Addressable Latch	Q	B,C	B,C	
MC14160B	Decade Counter	Q	B,C	B,C	
MC14161B	Binary Counter	Q	B,C	B,C	
MC14162B	Decade Counter	Q	B,C	B,C	
MC14163B	Binary Counter (Syn. Clear)	Q	B,C	B,C	
MC14174B	Hex D Flip-Flop	Q	B,C	B,C	
MC14175B	Quad D Flip-Flop	Q	B,C	B,C	
MC14194B	4-Bit Universal Shift Reg.	Q	B,C	B,C	

Q Qualified «common F» components
Q+ Qualified «sole F» components

CMOS

DEVICE TITLE	FUNCTIONAL DESCRIPTION	BS9000 CATEGORY S2 and S3	CECC90000 PROCESSED Class	883 PROCESSED Class	JM 38510 QUALIFIED Slash Sheet N°
MC14490	Hex Contact Bounce Elim.	Q	B,C	B,C	
MC14501UB	Triple Gate	Q	B,C	B,C	
MC14502B	Strobe Hex Inverter/Buffer	Q	B,C	B,C	
MC14503B	Hex Three-State Buffers	Q	B,C	B,C	
MC14504B	Hex TTL or CMOS to CMOS Level Shifter		B,C	B,C	
MCM14505A	64 x 1 Bit Static RAM		B,C	B,C	
MC14506B	Dual Expandable AOI Gate	Q	B,C	B,C	
MC14507	Quad Exclusive OR Gate	Q+	B,C	B,C	
MC14508B	Dual 4-Bit Latch	Q	B,C	B,C	
MC14510B	BCD Up/Down Counter	Q	B,C	B,C	
MC14511B	BCD-to-7 Segment Latch/Decoder/Driver	Q	B,C	B,C	
MC14512B	8-Channel Data Selector	Q	B,C	B,C	
MC14514B	4/16 Line Decoder (High)	Q	B,C	B,C	
MC14515B	4/16 Line Decoder (Lo)	Q	B,C	B,C	
MC14516B	Binary Up/Down Counter	Q	B,C	B,C	
MC14517B	Dual 64-Bit Static Shift Register	Q	B,C	B,C	
MC14518B	Dual BCD Up Counter	Q	B,C	B,C	
MC14519B	4-Bit And/Or Selector	Q	B,C	B,C	
MC14520B	Dual Binary Up Counter	Q	B,C	B,C	
MC14521B	24-State Frequency Divider	Q	B,C	B,C	
MC14522B	BCD Divide-by-N Counter		B,C	B,C	
MC14526B	Binary Divide-by-N Counter	Q	B,C	B,C	
MC14527B	BCD Rate Multiplier	Q	B,C	B,C	
MC14528B	Dual Monostable Multivibrator	Q	B,C	B,C	
MC14529B	Dual Monostable Multivibrator	Q	B,C	B,C	
MC14530B	Dual 5-Input Majority Logic Gate	Q	B,C	B,C	
MC14531B	12-Bit Parity Tree	Q	B,C	B,C	
MC14532B	8-Bit Priority Encoder	Q	B,C	B,C	
MC14534B	Real Time 5-Dec. Counter	Q	B,C	B,C	
MC14536B	Programmable Timer		B,C	B,C	
MCM14537A	256 x 1 Bit Static RAM		B,C	B,C	
MC14538B	Dual Precision Monostable Mult.	Q	B,C	B,C	
MC14539B	Dual 4-Channel MUx		B,C	B,C	
MC14541B	Oscillator/Timer	Q	B,C	B,C	
MC14543B	BCD-to-7 Segment Latch/Decoder/Driver		B,C	B,C	
MC14549B	Successive Approx. Register	Q	B,C	B,C	
MC14551B	Quad 2-Channel Analog Mux		B,C	B,C	
MCM 4552A	64 x 4 Bit Static RAM		B,C	B,C	
MC14553B	Three-Digit BCD Counter		B,C	B,C	
MC14554B	2 x 2 Bit-Parallel Binary Mult.		B,C	B,C	
MC14555B	Dual Binary 1 of 4 Decoder	Q	B,C	B,C	
MC14556B	Dual Binary 1 of 4 Decoder (inv)	Q	B,C	B,C	
MC14557B	1-64 Bit Shift Register	Q	B,C	B,C	
MC14558B	BDC-10-7 Segment Decoder		B,C	B,C	
MC14559B	Successive Approx. Register	Q	B,C	B,C	
MC14560B	NBCD Adder		B,C	B,C	
MC14561B	9's Complementer		B,C	B,C	
MC14562B	128 Bit Static Shift Register	Q	B,C	B,C	
MC14566B	Industrial Time Base Generator		B,C	B,C	
MC14568B	Phase Comparator/Program Counter	Q	B,C	B,C	
MC14569B	High Speed Dual Prog. Counter		B,C	B,C	
MC14572UB	Hex Gate	Q	B,C	B,C	
MC14573	Quad Programmable Op Amp		B,C	B,C	
MC14574	Quad Programmable Comparator		B,C	B,C	
MC14575	Dual/Dual Prog. Op Ampl/Comparator		B,C	B,C	
MC14580B	4 x 4 Multiport Register		B,C	B,C	
MC14581B	4-Bit Arithmetic Logic Unit		B,C	B,C	
MC14582B	Look-Ahead Carry Block		B,C	B,C	
MC14583B	Dual Schmitt Trigger		B,C	B,C	
MC14584B	Hex Schmitt Trigger	Q	B,C	B,C	
MC14585B	4-Bit Magnitude Comparator	Q	B,C	B,C	
MC145100B	4 x 4 Crosspoint switch	Q	B,C	B,C	

Q Qualified «common F» components
Q+ Qualified «sole F» components

TTL–LS

DEVICE TITLE	FUNCTIONAL DESCRIPTION	CECC90000 PROCESSED Class	883 PROCESSED Class	JM 38510 QUALIFIED Slash Sheet N°
LS00	Quad 2-Input NAND Gate	82-Q2	B,C	30001
LS01	Quad 2-Input NAND Gate OC	82-Q2	B,C	
LS02	Quad 2-Input NOR Gate	82-Q2	B,C	30301
LS03	Quad 2-Input NAND Gate OC	82-Q2	B,C	30002
LS04	Hex Inverter	82-Q2	B,C	30003
LS05	Hex Inverter OC	82-Q2	B,C	30004
LS08	Quad 2-Input AND Gate	82-Q2	B,C	31004
LS09	Quad 2-Input AND Gate OC	82-Q2	B,C	31005
LS10	Triple 3-Input NAND Gate	82-Q2	B,C	30005
LS11	Triple 3-Input AND Gate	82-Q2	B,C	31001
LS12	Triple 3-Input NAND Gate OC	82-Q2	B,C	30006
LS13	Dual 4-Input Schmitt-Trigger	82-Q2	B,C	31301
LS14	Hex Schmitt-Trigger	82-Q2	B,C	31302
LS15	Triple 3-Input AND Gate OC	82-Q2	B,C	31002
LS20	Dual 4-Input NAND Gate	82-Q2	B,C	30007
LS21	Dual 4-Input AND Gate	82-Q2	B,C	31003
LS22	Dual 4-Input NAND Gate	82-Q2	B,C	30008
LS26	Quad 2-Input NAND Gate (Hi-Voltage)	82-Q2	B,C	32102
LS27	Triple 3-Input NOR Gate	82-Q2	B,C	30302
LS28	Quad 2-Input NOR Buffer	82-Q2	B,C	30204
LS30	8-Input NAND Gate	82-Q2	B,C	30009
LS32	Quad 2-Input OR Gate	82-Q2	B,C	30501
LS33	Quad 2-Input NOR Buffer OC	82-Q2	B,C	–
LS37	Quad 2-Input NAND Buffer	82-Q2	B,C	30202
LS38	Quad 2-Input NAND Buffer OC	82-Q2	B,C	30203
LS40	Dual 4-Input NAND Buffer	82-Q2	B,C	30201
LS42	1 OF-10 Decoder	82-Q2	B,C	30703
LS47	BCD To 7-SEG Decoder/Driver OC	82-Q2	B,C	30704
LS48	BCD to 7-SEG Decoder/Driver Pull-Up	82-Q2	B,C	–
LS49	BCD To 7-SEG Decoder/Driver OC	82-Q2	B,C	–
LS51	Dual 2-2-Input AOI Gate	82-Q2	B,C	30401
LS54	2-3-3-2-Input AOI Gate	82-Q2	B,C	30402
LS55	2-Wide 4-Input AOI Gate	82-Q2	B,C	–
LS73A	Dual JK Flip-Flop	82-Q2	B,C	30101
LS74A	Dual D Flip-Flop	82-Q2	B,C	30102
LS75	4-Bit Bi-Stable Latch	82-Q2	B,C	–
LS76A	Dual JK Flip-Flop	82-Q2	B,C	30110
LS77	4-Bit Bi-Stable Latch	82-Q2	B,C	–
LS78A	Dual JK Flip-Flop W/Preset	82-Q2	B,C	–
LS83A	4-Bit Full Adder	82-Q2	B,C	31201
LS85	4-Bit Magnitude Comparator	82-Q2	B,C	31101
LS86	Quad Exclusive OR Gate	82-Q2	B,C	30502
LS90	Decade Counter	82-Q2	B,C	31501
LS91	8-Bit Shift Register SISO	82-Q2	B,C	–
LS92	Divide-By-12 Counter	82-Q2	B,C	31510
LS93	4-Bit Binary Counter	82-Q2	B,C	31502
LS95B	4-Bit Schift Register	82-Q2	B,C	30603
LS107A	Dual JK Flip-Flop W/Clear	82-Q2	B,C	30108
LS109A	Dual JK Flip-Flop W/Preset	82-Q2	B,C	30109
LS112A	Dual JK Edge-Triggered Flip-Flop	82-Q2	B,C	30103
LS113A	Dual JK Edge-Triggered Flip-Flop	82-Q2	B,C	30104
LS114A	Dual JK Edge-Triggered Flip-Flop	82-Q2	B,C	30105
LS122	Retrig Monost Multivibrator (Int Res)	82-Q2	B,C	31403
LS123	Dual Retrig Monost Multivibrator	82-Q2	B,C	31401
LS125A	Quad TS Buffer (Low Enable)	82-Q2	B,C	32301
LS126A	Quad TS Buffer (High Enable)	82-Q2	B,C	32302
LS132	Quad 2-Input Schmitt-Trigger	82-Q2	B,C	31303
LS133	13-Input NAND Gate	82-Q2	B,C	–
LS136	Quad Exclusive OR Gate OC	82-Q2	B,C	–
LS137	3-8 Line Decider/Demux/W/Add Latch	82-Q2	B,C	–
LS138	1-OF-8 decoder/Demux	82-Q2	B,C	30701
LS139	Dual 1-OF-4 Decoder/Demux	82-Q2	B,C	30702
LS145	1-OF-10 Decoder/Driver OC	82-Q2	B,C	–
LS147	10-4 Line Priority Encoder	82-Q2	B,C	–
LS148	8-1Q-3 Line Priority Encoder	82-Q2	B,C	36001
LS151	8-Input Mux	82-Q2	B,C	30901
LS153	Dual 4-Input Mux	82-Q2	B,C	30902
LS155	Dual 1-OF-4 Decoder	82-Q2	B,C	30608
LS156	Dual 1-OF-4 Decoder OC	82-Q2	B,C	30609
LS157	Quad 2-Input Mux (Non-Inv)	82-Q2	B,C	30903
LS158	Quad 2-Input Mux (Inv)	82-Q2	B,C	30904
LS160A	BCD Decade Counter Asyn Reset	82-Q2	B,C	31503
LS161A	4-Bit Binary Counter Asyn Reset	82-Q2	B,C	31504
LS162A	BCD Decade Counter Syn Reset	82-Q2	B,C	31511
LS163A	4-Bit Binary Counter Syn reset	82-Q2	B,C	31512
LS164	8-Bit Serial IN/Parallel OUT SR	82-Q2	B,C	30605
LS165	8-Bit Parallel IN/Serial OUT SR	82-Q2	B,C	30608
LS166	8-Bit Parallel IN/Serial OUT SR	82-Q2	B,C	30609
LS168	UP/Down Decade Counter	82-Q2	B,C	31505
LS169	Up/Down Binary Counter	82-Q2	B,C	31506
LS170	4 x 4 Register File OC	82-Q2	B,C	31901
LS173	4-Bit D Register TS	82-Q2	B,C	–
LS174	Hex D Flip-Flop W/Clear	82-Q2	B,C	30106
LS175	Quad D Flip-Flop W/Clear	82-Q2	B,C	30107

DEVICE TITLE	FUNCTIONAL DESCRIPTION	CECC90000 PROCESSED Class	883 PROCESSED Class	JM 38510 QUALIFIED Slash Sheet N°
LS181	4-Bit ALU	82-Q2	B,C	30801
LS182	Look-Ahead Carry Generator	82-Q2	B,C	–
LS183	Dual Carry/Shave Full Adder	82-Q2	B,C	–
LS190	UP/Down Decade Counter	82-Q2	B,C	31513
LS191	Up/Down Decade Counter W/Clear	82-Q2	B,C	31509
LS192	Up/Down Decade Counter W/Clear	82-Q2	B,C	31507
LS193	Up/Down Binary Counter W/Clear	82-Q2	B,C	31508
LS194A	4-Bit Right/Left SR	82-Q2	B,C	30601
LS195A	4-Bit SR (9300-Type)	82-Q2	B,C	30602
LS196	Decade Counter	82-Q2	B,C	32001
LS197	4-Bit Binary Counter	82-Q2	B,C	32002
LS221	Dual One-Shot (Very Stable)	82-Q2	B,C	31402
LS240	Octal Bus/Line Driver/Inv TS	82-Q2	B,C	32401
LS241	Octal Bus/Line Driver TS	82-Q2	B,C	32402
LS242	Quad Bus Transceiver/Inv TS	82-Q2	B,C	32801
LS243	Quad Bus Transceiver/N-Inv TS	82-Q2	B,C	32802
LS244	Octal TS Driver/N-Inv	82-Q2	B,C	32403
LS245	Octal Bus Transceiver/N-Inv TS	82-Q2	B,C	32803
LS247	BCD To 7-SEG Decoder/Driver OC	82-Q2	B,C	–
LS248	BCD To 7-SEG Decoder/Driver Pull-Up	82-Q2	B,C	–
LS249	BCD To 7-SEG Decoder/Driver OC	82-Q2	B,C	–
LS251	8-Input Mux TS	82-Q2	B,C	30905
LS253	Dual 4-Input Mux TS	82-Q2	B,C	30908
LS256	Dual 4-Bit Addressable Latch	82-Q2	B,C	–
LS257A	Quad 2-Input Mux/N-Inv TS	82-Q2	B,C	30906
LS258A	Quad 2-Input Mux/Inv TS	82-Q2	B,C	30907
LS259	8-Addressable Latch (9334)	82-Q2	B,C	31603
LS260	Dual 5-Input NOR Gate	82-Q2	B,C	–
LS266	Quad Exclusive NOR Gate OC	82-Q2	B,C	30303
LS273	Octal D Flip-Flop W/Clear	82-Q2	B,C	32501
LS279	Quad Set/Reset Latch	82-Q2	B,C	31602
LS280	9-Bit Odd/Even Parity Gen/Checker	82-Q2	B,C	32901
LS283	4-Bit Full Adder (Rotated LS83A)	82-Q2	B,C	31202
LS290	Decade Counter (Divide By 2 & 5)	82-Q2	B,C	32003
LS293	4-Bit Binary Counter	82-Q2	B,C	32004
LS295A	4 Bit SR TS	82-Q2	B,C	30606
LS298	Quad 2-Mux W/Output Register	82-Q2	B,C	30909
LS299	8-Bit Shift/Storage register TS	82-Q2	B,C	–
LS322A	8-Bit Shift Register W/Sign Extend TS	82-Q2	B,C	–
LS323	8-Bit Shift/Storage Register TS	82-Q2	B,C	–
LS348	8-To-3 Line Priority Encoder TS	82-Q2	B,C	36002
LS352	Dual 4-Mux (Inv LS 153)	82-Q2	B,C	–
LS353	Dual 4-Mux (LS 352 W/TS)	82-Q2	B,C	–
LS365A	Hex Buffer TS Common Enable	82-Q2	B,C	32201
LS366A	Hex Inv TS Common Enable	82-Q2	B,C	32202
LS367A	Hex Buffer TS 4-Bit & 2-Bit	82-Q2	B,C	32203
LS368A	Hex Inv TS 4-Bit & 2-Bit	82-Q2	B,C	32204
LS373	Octal Transparent Latch TS	82-Q2	B,C	32502
LS374	Octal D Flip-Flop TS	82-Q2	B,C	32503
LS375	Quad Latch	82-Q2	B,C	31604
LS377	Octal D Flip-Flop W/Enable	82-Q2	B,C	32504
LS378	Hex D Flip-Flop W/Enable	82-Q2	B,C	–
LS379	4-Bit D Flip-Flop W/Enable	82-Q2	B,C	–
LS385	Quad Adder/Subtractor (4-Bit)	82-Q2	B,C	–
LS386	2-Input Quad/Exclusive OR Gate	82-Q2	B,C	–
LS390	Dual Decade Counter	82-Q2	B,C	32701
LS393	Dual 4-Bit Binary Counter	82-Q2	B,C	32702
LS395	4-Bit SR TS	82-Q2	B,C	30607
LS398	Quad 2-Input Mux W/Storage	82-Q2	B,C	–
LS399	Quad 2-Input Mux/Storage	82-Q2	B,C	–
LS490	Dual decade Counter	82-Q2	B,C	32703
LS540	Octal Buffer/Line Driver TS	82-Q2	B,C	–
LS541	Octal Buffer/Line Driver TS	82-Q2	B,C	–
LS568	Decade Up/Down Counter TS	82-Q2	B,C	–
LS569	Binary Up/Down Counter TS	82-Q2	B,C	–
LS620	Octal Transceiver W/Storage	82-Q2	B,C	–
LS621	Octal Transceiver W/Storage	82-Q2	B,C	–
LS622	Octal Transceiver W/Storage	82-Q2	B,C	–
LS623	Octal Transceiver W/Storage	82-Q2	B,C	–
LS640	Octal Inv Bus Transceiver TS	82-Q2	B,C	–
LS641	Octal N-Inv Bus Transceiver OC	82-Q2	B,C	–
LS643	Octal True/Inv Bus Transceiver TS	82-Q2	B,C	–
LS644	Octal True/Inv Bus Transceiver OC	82-Q2	B,C	–
LS645	Octal N-Inv Bus Transceiver TS	82-Q2	B,C	–
LS668	Prog Syn 4-Bit Up/Down Decade Counter	82-Q2	B,C	–
LS669	Prog Syn 4-Bit Up/Down Binary Counter	82-Q2	B,C	–
LS670	4 x 4 Register File TS	82-Q2	B,C	31902
LS716	Prog decade Counter (MC 4016)	82-Q2	B,C	–
LS718	Prog Binary Counter (MC 4018)	82-Q2	B,C	–
LS783	Syn Address Mux (MC 6883)	82-Q2	B,C	–
LS795	Octal Buffer (81 LS95)	82-Q2	B,C	–
LS796	Octal Buffer (81 LS96)	82-Q2	B,C	–
LS797	Octal Buffer (81 LS97)	82-Q2	B,C	–
LS798	Octal Buffer (81 LS98)	82-Q2	B,C	–

ECL

DEVICE TITLE	FUNCTIONAL DESCRIPTION	CECC90000 PROCESSED Class	883 PROCESSED Class	JM 38510 QUALIFIED Slash Sheet N°
10100/10500	Quad 2-Input NOR Gate w th Strobe	82-Q2	B,C	
10101/10501	Quad OR/NOR Gate	82-Q2	B,C	6001
10102/10502	Quad 2-Input NOR Gate	82-Q2	B,C	6002
10103/10503	Quad 2-Input OR Gate	82-Q2	B,C	
10104/10504	Quad 2-Input AND Gate	82-Q2	B,C	6201
10105/10505	Triple 2-3-2 Input OR/NOR Gate	82-Q2	B,C	6003
10106/10506	Triple 4-3-3 Input NOR Gate	82-Q2	B,C	6004
10107/10507	Triple 2-Input Exclusive OR/Exclusive NOR	82-Q2	B,C	6005
10109/10509	Dual 4-5 Input OR/NOR Gate	82-Q2	B,C	6006
10110	Dual 3-Input 3-Output OR Gate	82-Q2	B,C	
10111	Dual 3-Input 3-Output NOR Gate	82-Q2	B,C	
10113/10513	Quad Exclusive OR Gate	82-Q2	B,C	
10114/10514	Triple Line Receiver	82-Q2	B,C	
10115/10515	Quad Line Receiver	82-Q2	B,C	
10116/10516	Triple Line Receiver	82-Q2	B,C	
10117/10517	Dual 2-Wide 2-3-Input OR-AND/OR-AND-INVERT Gate	82-Q2	B,C	
10118/10518	Dual 2-Wide 3-Input OR-AND Gate	82-Q2	B,C	
10119/10519	4-Wide 4-3-3-3-Input OR-AND Gate	82-Q2	B,C	
10121/10521	4-Wide OR-AND/OR-AND-INVERT	82-Q2	B,C	
10123	Triple 4-3-3-Input Bus Driver	82-Q2	B,C	
10124/10524	Quad TTL-to-MECL Translator	82-Q2	B,C	6301
10125/10525	Quad MECL-to-TTL Translator	82-Q2	B,C	6302
10128	Dual Bus Driver (MECL 10,000 to TTL/IBM)	82-Q2	B,C	
10129	Quad Bus Receiver (TTL/IBM to MECL 10,000)	82-Q2	B,C	
10130/10530	Dual Latch	82-Q2	B,C	
10131/10531	Dual Type D Master-Slave Flip-Flop	82-Q2	B,C	6101
10132	Dual Multiplexer with Latch and Common Reset	82-Q2	B,C	
10133/10533	Quad Latch	82-Q2	B,C	
10134	Dual Multiplexer with Latch	82-Q2	B,C	
10135	Dual J-K Master-Slave Flip-Flop	82-Q2	B,C	6104
10136	Universal Hexadecimal Counter	82-Q2	B,C	
10137	Universal Decade Counter	82-Q2	B,C	
10138/10538	Bi-Quinary Counter	82-Q2	B,C	
10139/10539	32 x 8-Bit Programmable Read-Only Memory	82-Q2	B,C	
10141/10541	4-Bit Universal Shift Register	82-Q2	B,C	
10143	8 x 2 Multiport Register File (RAM)	82-Q2	B,C	
10144/10544	256 x 1-Bit Random Access Memory	82-Q2	B,C	
10145/10545	16 x 4-Bit Register File (RAM)	82-Q2	B,C	
10146/10546	1024 x 1-Bit Random Access Random Memory	82-Q2	B,C	
10147/10547	126 x 1-Bit Random Access Memory	82-Q2	B,C	
10148/10548	64 x 1-Bit Random Access Memory	82-Q2	B,C	
10152/10552	256 x 1-Bit Random Access Memory	82-Q2	B,C	
10153/10553	Quad Latch (Negative Clock)	82-Q2	B,C	
10158/10558	Quad 2-Input Multiplexer (Non-Inverting)	82-Q2	B,C	

DEVICE TITLE	FUNCTIONAL DESCRIPTION	CECC90000 PROCESSED Class	883 PROCESSED Class	JM 38510 QUALIFIED Slash Sheet N°
10159	Quad 2-Input Multiplexer (Inverting)	82-Q2	B,C	
10160/10560	12-Bit Parity Generator/Checker	82-Q2	B,C	
10161/10561	Binary to 1-8 Line Decoder (Low)	82-Q2	B,C	
10162/10562	Binary to 1-8 Line Decoder (High)	82-Q2	B,C	
10163/10563	Error Detection/Correction Circuit (IBM Pattern)	82-Q2	B,C	
10164/10564	8-Line Multiplexer	82-Q2	B,C	
10165/10565	8-Input Priority Encoder	82-Q2	B,C	
10166	5-Bit Magnitude Comparator	82-Q2	B,C	
10168/10568	Quad Latch (Common Clock)	82-Q2	B,C	
10170/10570	9 + 2-Bit Parity Checker	82-Q2	B,C	
10171/10571	Dual 4-Line Decoder (Low)	82-Q2	B,C	
10172/10572	Dual 4-Line Decoder (High)	82-Q2	B,C	
10173	Quad 2-Input Multiplexer/Latch	82-Q2	B,C	
10174/10574	Dual 4-to-1 Multiplexer	82-Q2	B,C	
10175/10575	Quint Latch	82-Q2	B,C	
10176/10576	Hex D Master-Slave Flip-Flop	82-Q2	B,C	6103
10177	Triple MECL-to-MDS Translator (N-Channel)	82-Q2	B,C	
10178/10578	Binary Counter	82-Q2	B,C	
10179/10579	Look Ahead Carry Block	82-Q2	B,C	
10180/10580	Dual 2-Bit Adder/Subtractor	82-Q2	B,C	
10181/10581	4-Bit Arithmetic Logic Unit and Function Generator	82-Q2	B,C	
10182/10582	2-Bit Arithmetic Logic Unit and Function Generator	82-Q2	B,C	
10183	4 x 2 Multiplier	82-Q2	B,C	
10186/10586	Hex D Flip-Flop with Common Reset	82-Q2	B,C	
10188	Hex Buffer with Enable	82-Q2	B,C	
10189	Hex Inverter with Enable	82-Q2	B,C	
10190/10590	Quad MST-to-MECL Translator	82-Q2	B,C	
10191/10591	Hex MECL-to-MST Translator	82-Q2	B,C	
10192/10592	Quad Bus Driver	82-Q2	B,C	
10193/10593	Error Detection/Correction Circuit (Motorola Pattern)	82-Q2	B,C	
10194/10594	Dual Simultaneous Bus Transceiver	82-Q2	B,C	
10195/10595	Hex Inverter/Buffer	82-Q2	B,C	
10197/10597	Hex AND Gate	82-Q2	B,C	
10198	Monostable Multivibrator	82-Q2	B,C	
10210/10610	High-Speed Dual 3-Input/3-Output OR Gate	82-Q2	B,C	
10211/10611	High-Speed Dual 3-Input/3-Output NDR Gate	82-Q2	B,C	
10212/10612	High-Speed Dual 3-Input/3-Output OR/NOR Gate	82-Q2	B,C	
10216/10616	High-Speed Triple Line Receiver	82-Q2	B,C,	
10231/10631	High-Speed Dual D Master-Slave Flip-Flop	82-Q2	B,C	
10287/10687	High-Speed 2-Bit Multiplier	82-Q2	B,C	
10318	High-Speed MECL Digital-to-Analog Converter	82-Q2	B,C	
10800	MECL-LSI 4-Bit Alu Slice	82-Q2	B,C	
10801	MECL-LSI Microprogram Control Function	TBA	TBA	
10803	MECL-LSI Memory Interface Function	82-Q2	B,C	
10804/10805	MECL-LSI ECL/TTL Inverting Bidirectional Transceiver with Latch	82-Q2	B,C	
10806	MECL-LSI Dual Access Stack	82-Q2	B,C	
10807	MECL 5-Bit Bidirectional Bus Transceiver	82-Q2	B,C	
10808	MECL-LSI Programmable 16-Bit Shifter Function	82-Q2	B,C	

Processed according to CECC 90000

Test N°	Screen	CECC 90000 test method	Details and conditions	Class A	Class B
1	Internal visual (precap)	4.2.1	CECC90000 appendix A	100 %	100 %
2	High temperature storage	4.6.1.1	24H at max rated storage temperature	100 %	100 %
3	Temperature cycling	4.6.8.1	10 cycles 10min each at min max storage temperature	100 %	100 %
4	Constant acceleration	4.6.7	As specified and according IEC 68-2-7 value 30000G (note 1)	100 %	100 %
6	Hermetic seal				
	(A) fine leak	4.6.9.1	Tracer gas method according IEC 68-2-17 test Qk	100 %	100 %
	B) gross leak	4.6.9.2	Bubble test according IEC 68-2-17 test Qc	100 %	100 %
0.2	Burn-in	Per Motorola Data Sheet or Detail Specification	Duration T = 168H tolerance: −8H T = Tmax operating	100 %	–
1.2	Final electrical tests			100 %	100 %
3.1	Electrical group A inspection (quality conformance)		According to subgroup A2, A3, A4a, A4b, A5 of detail specification	Sampling Assessment S	Sampling Assessment S
5	External visual inspection			100 %	100 %
	Quality conformance group B, C			Sampling Assessment S	Sampling Assessment S
	Typical reliability improvement compared to commercial products as per MIL-HDBK 217C			12	2

Note (1) applicable only for devices with Au wire.

Processed according to MIL–STD–883

Test N°	Screen	MIL-STD-883 method	Condition	Class B	Class C
1	Internal visual (precap) inspection	2010	Condition B	100 %	100 %
2	High temperature stabilization bake	1008	24H at max rated storage temperature	100 %	100 %
3	Temperature cycling	1010	10 cycles 10mns each at min max storage temperature	100 %	100 %
4	Constant acceleration	2001	Y1 axis at 30000G min (1)	100 %	100 %
5	Burn-in	1015	Condition C 160H at TA=125°C	100 %	–
6	Final electrical tests	per Motorola detail specification	Static tests at 25°C	100 %	100 %
7	PDA (lot acceptance)		Applicable on electrical rejects found on pos. 6	10 % max	10 % max
8	Hermetic seal a) fine b) gross	1014	 Condition A or B Condition C	100 %	100 %
9	Electrical group A inspection (quality conformance)		– DC parameters at TA=25°C – DC parameters at high and low temp. – Dynamic tests at 25°C AC test	AQL Level II 0,4 % 0,65 % 0,65 %	AQL Level II 0,4 % 0,65 % 0,65 %
10	External visual inspection	2009	To be performed after complete marking	100 %	100 %
11	Quality conformance Group B, C test	5005	See Program Options	Option Q	Option Q
	Typical reliability improvement (IiQ quality factor) compared to commercial products as per MIL HDBK 217 C.			15	2.5

Option Q – Qualification group B and C tests

Group B

Tests	MIL STD 883 method	Condition	LTTD
***Subgroup* 1** Physical dimension	2016		2 devices (no failures)
Subgroup 2 Resistance to solvents	2015		4 devices (no failures)
Subgroup 3 Solderability	2003	Soldering temperature of 260 ± 10°C	15
Subgroup 4 Lead fatigue	2004	Test condition B2	15
Subgroup 5 Bond strength	2011	As applicable	15
Subgroup 7 Seal a) fine b) gross	1014	As applicable	5

Group C

Tests	MIL STD 883 method	Condition	LTTD
Subgroup 1 Steady state Life test	1005	1000Hrs at 125°C	5
Subgroup 2 Temperature cycling Constant acceleration Seal a) fine b) gross visual examination	 1010 2001 1014	 Test condition C Test condition E min	15

Processed according to CECC 90000

Test N°	Screen	CECC 90000 method	Condition	Class B	Class C
1	Internal visual (precap)	4.2.1	Appendix A	100 %	100 %
2	High temperature storage	4.6.1.1	24H at max rated storage temperature	100 %	100 %
3	Temperature cycling	4.6.8.1 storage temperature	10 cycles, 10min each at min/max storage temperature	100 %	100 %
4	Constant acceleration	4.6.7	According to IEC 68-2-7	100 %	100 %
5	Seal (A) fine/(B) gross (1)	4.6.9.1/4.6.9.2	According to IEC 68-2-17	100 %	100 %
6	Interim (Pre-Burn-In) electr. parameters (2)	Motorola data sheet or CECC slash sheet	DC-test at 25°C	100 %	
7	Burn-in test		Duration T = 168 H T = Tmax operation or equivalent (145°C, 87H)	100 %	
8	Interim (Post-Burn-in) electr. parameters (2)	Motorola data sheet or CECC slash sheet	DC-test at 25°C	100 %	
9	Seal (A) fine/(B) gross (1)	4.6.9.1/4.6.9.2	According to IEC 68-2-17	100 %	100 %
10	Final electrical test	Per motorola data sheet or CECC slash sheet	DC parameter at: 1. 25°C 2. Max. min. operating temperature Functional test at 25°C	 100 % 100 % 100 %	 100 % 100 % 100 %
11	Qualification or conformance inspection	According to CECC 90100 – 5.4	– Group A – Group B – Group C	Assessment R sampling	Assessment R sampling
12	External visual			100 %	100 %

1) The fine and gross seal screen tests shall be performed in any sequence between step 5 and 9 after completion of all bending operations on the terminals.
2) Unless otherwise specified at the manufacturers option.

Processed according to MIL–STD–883

Test N°	Screen	MIL-STD-883B Method	Condition	Class B	Class C
1	Internal visual (Precap)	2010	Condition B	100 %	100 %
2	Stabilization bake	1008	6 HRS at 175°C or equivalent	100 %	100 %
3	Temperature cycling	1010	Condition C 10 cycles	100 %	100 %
4	Constant acceleration	2001	Condition E Y 1 axis only	100 %	100 %
5	Seal (A) Fine (B) Gross	1014	A) Condition B B) Condition C	100 %	100 %
6	Interim electrical parameters	Per Motorola data sheet	DC Test at 25°C	100 %	–
7	Burn-In test	1015	160 HRS at 125°C or equivalent	100 %	–
8	Final electrical test	Per Motorola data sheet	DC-Parameter at 1) 25°C 2) Max. and Min. Dynamic Test and Switching Test 25°C Functional Test at 25°C	100 % 100 % 100 % 100 %	100 % – – 100 %
9	Qualification or quality conformance inspection	5005 Class B	Group A Group B Group C Group D	Sample Sample Optional Optional	Sample Sample Optional Optional
10	External visual	2009		100 %	100 %

Processed according to BS9000

Test N°	Inspection screening	BS 9400 test method	Condition of test	Category S2 Screening Level B	Category S3 Screening Level C
1	Pre-cap inspection	1.2.10	Level B	100 %	100 %
2	High temperature storage	1.2.6.3	150°C for 24 hours	100 %	100 %
3	Rapid change of temperature	1.2.6.13	10 cycles −65°C to 150°C	100 %	100 %
4	Acceleration steady state	1.2.6.9	296 000 m/s^2 in direction Y2	100 %	100 %
5	Fine and Grossleak tests	1.2.6.14.(1).(3)		100 %	100 %
6	Electrical tests	per BS9490 or BS9491 specification	as subgroups A2 and A3 of the specification at 25°C	100 %	–
7	Burn-in screen	1.2.7.2	168 hour minimum at 125°C	100 %	–
8	Final electrical tests	per BS9490 or BS9491 specification	as subgroups A2 and A3 of the specification at 25°C	100 %	100 %
9	Quality Assurance subgroup A				
	A1 Visual inspection	1.2.2	Inspection level I	AQL 1.5 %	1.5 %
	A2 Functional		II	0.15 %	0.15 %
	A3 Static		II	1.5 %	1.5 %
	A4 Dynamic		S-4	4 %	4 %
10	Subgroup B				
	B1 Dimensions	1.2.3	Inspection Level S-2	6.5 %	6.5 %
	B2 (a) Solderability (D)	1.2.6.15.1	S-4	4.0 %	4.0 %
	B2 (b) Rapid change of temperature followed by fine and gross leak	1.2.6.13 1.2.6.14.(1).(3)	S-4	4.0 %	4.0 %
	B3 Terminal Robustness bending (D)	1.2.6.16.3	S-3	6.5 %	6.5 %
	B6 Acceleration steady state	1.2.6.9	S-4	4.0 %	4.0 %
	B7 Electrical Endurance	1.2.7.2.6	S-4	1.5 %	1.5 %
	B8 Attributes information for subgroups B2(a), B2(b), B3, B6, B7				
	Subgroup C		Every 3 months		
	Subgroup D		Every 12 months		

Inspection requirements: All tests to be conducted at T amb=25°C unless otherwise specified. Samples sumbitted to tests marked 'D' shall not be accepted for release under BS 9000 (see 2.5.5. of BS 9000, Part 1).

Acceleration Test: Direction Y2 is the acceleration which tends to separate the bonds.

Burn-in Screen If during electrical tests after Burn-in more than 10 % defectives are found the production lot will be rejected.

Processed according to CECC 90000

Test N°	Screen	CECC 90000 method	Condition	Class B	Class C
1	Internal visual (precap)	4.2.1	Appendix A	100 %	100 %
2	High temperature storage	4.6.1.1	24H at max rated storage temperature	100 %	100 %
3	Temperature cycling	4.6.8.1	10 cycles 10min each at min/max storage temperature	100 %	100 %
4	Constant acceleration	4.6.7	As specified A according to IEC 68-2-7	100 %	100 %
5	Hermetical seal (A) fine leak (1) (B) gross leak	 4.6.9.1 4.6.9.2	Tracer gas method according to IEC 68-2-17 test Qk followed by Bubble test according to IEC 68-2-17 test Qc.	100 %	100 %
6	Interim electrical parameters (2)	Motorola data sheet or CECC slash sheet	DC-test at 25°	100 %	
7	Burn-in test		Duration T=168H T=Tmax operation (or equivalent 145°C, 87H)	100 %	
8	Final electrical parameters	Motorola data sheet or CECC slash sheet	DC-test at 25°C	100 %	100 %
9	External visual		To be performed after marking	100 %	100 %
10	Quality assurances Subgroup A inspection (quality conformance)		According to subgroup A2, A3, A4, A5, of detail specification	Assessment S	Assessment S
11	Subgroup B, C			sampling	sampling

1) The fine and gross seal screen tests shall be performed in any sequence between step 5 and 9 after completion of all bending operations on the terminals.
2) Unless otherwise specified at the manufacturers option.

CMOS & NMOS

Processed according to MIL–STD–883

Processed devices most popular in Europe. Additional linear products are being added to this list as the market needs broaden.

Test N°	Screen	MIL-STD-883 Method	Condition	Class B	Class C
1	Internal visual (precap)	2010	Condition B	100 %	100 %
2	Stabilization bake	1008	24H min. Condition C	100 %	100 %
3	Temperature cycling	1010	10 cycles 10mns each at min max storage temp.	100 %	100 %
4	Constant acceleration	2001	Condition E min. Y1 axis	100 %	100 %
5	Hermetic seal a) fine b) gross	1014	 Condition A or B Condition C	 100 % 100 %	 100 % 100 %
6	Interim Electrical Parameters		Per applicable device specification	100 %	–
7	Burn-In	1015	160H, TA = 125°C or 87H, TA = 145°C	100 %	–
8	Final Electrical Tests 1) Static 25°C 2) Static min and max rated operating temperature 3) Dynamic 25°C 4) Functional 25°C	 5005 5005 5005 5005	Per applicable device specification Subgroup 1, table 1 Subgroups 2, 3, table 1. Subgroup 4 and 9, table 1 Subgroup 7, table 1	 100 % 100 % 100 % 100 %	 100 % sample at group A sample at group A 100 %
9	Quality conformance inspection	5005	Class B	sample at group A	sample at group A
10	External visual	2009		100 %	100 %
11	Quality conformance group B, C test	5005	See Program Options	Option Q	Option Q

Option Q – Qualification group B and C tests

Group B

Tests	MIL STD 883 method	Condition	LTTD
Subgroup 1 Physical dimension	2016		2 devices (no failures)
Subgroup 2 Resistance to solvents	2015		4 devices (no failures)
Subgroup 3 Solderability	2003	Soldering temperature of 260 ± 10°C	15
Subgroup 4 Lead fatigue	2004	Test condition B2	15
Subgroup 5 Bond strength	2011	As applicable	15
Subgroup 7 Seal a) fine b) gross	1014	As applicable	5

Group C

Tests	MIL STD 883 method	Condition	LTTD
Subgroup 1 Steady state Life test	1005	1000Hrs at 125°C	5
Subgroup 2 Temperature cycling Constant acceleration Seal a) fine b) gross Visual examination	 1010 2001 1014	 Test condition C Test condition E min	 15

Processed according to CECC 50000

Test N°	Screen	CECC 50000 Test method	Details and conditions	Class A	Class B
1	Internal visual (precap)	Appendix 6 paragraph 4		100 %	–
2	High temperature stabilization bake	4.4.1	24H at max rated storage temperature	100 %	100 %
3	Temperature cycling	4.4.4	5 cycles 30 min. each at min max storage temperature	100 %	100 %
4	Constant acceleration		As specified and according IEC68-2-7 and IEC147-5 (note1)	100 %	100 %
5	Hermetic seal	4.410	A) fine leak: Qk or radio isotope B) gross leak: Qc	100 %	100 %
6 6.1 6.2	Interim electrical test By variables By attribut		 Read and records initial values Check if values are within limits of group A	 100 % –	 – 100 %
7	Burn-in a) Diodes b) Bipolar transistors rated at ambiant temperature c) Bipolar transistors at case rated temperature d) Field effect transistors e) Rectifiers	 4.5.2.1 4.5.2.2 4.5.2.3 4.5.2.3 4.5.2.10 4.5.2.4	Duration in hours: Tolerances: Conditions High temperature reverse bins or power dissipation Power dissipation High temperature reverse bias High temperature reverse bias (VSB=0,T=150°C) Power dissipation for rectifiers rated at ambiant temperature High temperature reverse bias for rectifiers rated at case temperature	168 –8	72 –4
8 8.1 8.2	Final electrical test By variable By attribut		 Per detail specification delta parameter according CECC50000 annex VI paragraph 3 Check if values are within limit of group A	 100 % –	 – 100 %
	Quality conformance Group A		Per generic CECC 50000 Level F	Sampling Assessment F	Sampling Assessment F
	Typical reliability improvement compared to commercial products as per MIL HDBK 217C.			25	12

Note (1) applicable only for devices with Au wire.

Processed according to MIL-STD-750

Test N°	Screen	MIL-STD-750 method	Condition	Level A requirements	Level B requirements
1	Internal visual (precap) inspection	2072 2074	For transistors For Diodes	100 % 100 %	– –
2	High temperature stabilization bake	1032	24H at max rated storage temperature	100 %	100 %
3	Temperature cycling	1051	10 cycles 15mns each at min max storage temperature	100 %	100 %
4	Constant acceleration	2006	Y1 axis at 20000G min or 10000G (1) for devices with PA 10W at TC = 25° C	100 %	100 %
5	Serialization			100 %	–
6	High temperature reverse bias (HTRB)	1038 1039	For Diodes For transistors Condition A	Option R	Option R
7	Interim electrical test		As specified By variables (read and record)	100 %	–
8	Power burn-in	1038 1039 1040	For Diodes Condition B For Transistors Condition B For Thyristors Condition B	100 % 160H	100 % 160H
9	Final electrical test		As specified – by variables (read and record) – by attributs (GO NO GO)	100 % –	– 100 %
10	PDA (lot acceptance)		Applicable on electrical rejects found on pos. 9	10 % max	10 % max
11	Hermetic seal A) fine B) gross	1071	Condition G or H Condition C	100 %	100 %
12	Radiography	2076	See foot note (2)	100 %	–
13	Electrical group A inspection (Quality conformance)		– DC parameters TA = 25° C – DC parameters at high and low temperature – Dynamic tests at TA = 25° C – AC test at TA = 25° C	AQL 0.4 % Level II 0.65 % Level S3 0.65 % Level S3 0.65 % Level S3	
14	External visual examination	2071	To be performed after complete marking	100 %	100 %
15	Quality conformance Group B test		See Program Options	Option Q	Option Q
	Typical reliability improvement compared to commercial products as per MIL HDBK 217C			35	18

Note (1) applicable only for devices with Au wire
Note (2) not applicable for devices with Al wire

Option-R High temperature reverse bias screen

The devices are operated at reverse bias with the following conditions:
V_{CB} = 75 % of rated BV_{CBO} I_E = O
T_A = 100°C minimum
t = 96 hours
Electrical end point measurements are performed at the end of the test.

Option-Q Group B qualification

These tests are performed on an entire product on a sampling basis. Failure to pass these tests disqualifies the entire product lot.

Test	Mil STD 750 method	LTPD
Subgroup 1: Physical dimensions	2066	20
Subgroup II: Solderability	2026 (omit aging)	
Temperature cycling	1051, test condition C.	
Thermal shock	1056 condition A	
Hermetic seal	Method 112, MIL STD 202 test condition C, procedure III, test condition A for gross leaks	15
Moisture resistance	1021 (no initial conditioning)	
Subgroup III: Shock	2016 (non operating 1500 G 0.5 msec, 5 blows in each orientation, X1, Y1, Y2, Z1)	
Vibration fatigue	2046, non operating	
Vibration variable	2056	15
Constant accelaration	2006 (20.000 G. orientation X1, Y1, Y2, Z1) Note (1)	
Subgroup IV: Terminal strength	2036, test condition E.	20
Subgroup V: Salt atmosphere (corrosion)	1041	20
Subgroup VI: High temperature storage life	1031 (T=200°C min.)	γ=10
Subgroup VII: Steady state operating life	1026	γ=10

Note (1): – applicable only:
- devices with Au wires
- rectifiers and Diodes packages

Alphanumeric Index

Chapter 25

Device Type	Page
AD563	7-23
AM26LS31	7-16
AM26LS32	7-15
BA157	17-10
BA158	17-10
BA159	17-10
BDYW80-100	17-11
BB105A/B/G	21-6
BCX SERIES	19-14
BCY58	19-3
BCY59	19-3
BCY70	19-3
BCY78	19-3
BC107	19-3
BC109	19-3
BC109	10-3
BC140/1	19-6
BC160/1	19-8
BC177	19-3
BC178	19-3
BC179	19-3
BC182	19-12
BC212	19-12
BC237	19-12
BC238	19-12
BC239	19-12
BC239	19-13
BC264	19-26
BC307	19-12
BC308	19-12
BC309	19-13
BC309	19-12
BC327	19-13
BC328	19-13
BC337	19-13
BC338	19-13
BC368	19-16
BC369	19-16
BC372	19-16
BC373	19-16
BC413	19-13
BC414	19-13
BC416	19-13
BC445	19-13
BC446	19-13
BC448	19-13
BC449	19-13
BC450	19-13
BC486	19-13
BC487	19-13
BC488	19-13
BC489	19-13
BC490	19-13
BC546	19-12
BC547	19-12
BC548	19-12
BC549	19-13
BC550	19-13
BC556	19-12
BC557	19-12
BC558	19-12
BC559	19-13
BC560	19-13
BC617	19-16
BC618	19-16
BC635	19-16
BC636	19-16
BC637	19-12
BC639	19-16
BC639	19-16
BC640	19-16
BC650	19-13
BC651	19-13
BC6512	19-13

Device Type	Page
BD F758	12-5
BDCO SERIES	19-18
BDF FX11	19-24
BDF X63B	15-14
BDV64	15-14
BDV64A	15-14
BDV64B	15-14
BDV65	15-14
BDV65B	15-14
BDW10	15-14
BDW12	15-14
BDW14	15-14
BDW16	15-14
BDW30	15-14
BDW32	15-14
BDW34	15-14
BDW36	15-14
BDW39	15-14
BDW40	15-14
BDW41	15-14
BDW42	15-14
BDW45	15-14
BDW46	15-14
BDW47	15-14
BDX33	15-14
BDX33A	15-14
BDX33B	15-14
BDX33C	15-14
BDX34	15-14
BDX34A	15-14
BDX34A	15-14
BDX34B	15-14
BDX34C	15-14
BDX43A	15-14
BDX53C	15-14
BDX53	15-14
BDX53A	15-14
BDX53B	15-14
BDX54	15-14
BDX54A	15-14
BDX54B	15-14
BDX54C	15-14
BDX62B	15-14
BDX64C	15-14
BDX66C	15-14
BDX67C	15-14
BDY90	15-14
BDY91	15-14
BDY92	15-14
BD135	15-14
BD136	15-14
BD137	15-14
BD138	15-15
BD139	15-15
BD140	15-15
BD166	15-15
BD167	15-15
BD168	15-12
BD169	15-15
BD170	15-15
BD175	15-15
BD176	15-15
BD177	15-15
BD178	15-15
BD179	15-15
BD180	15-15
BD185	15-15
BD186	15-15
BD187	15-15
BD188	15-15
BD189	15-15
BD233	15-15
BD234	15-15
BD235	15-15

Device Type	Page
BD236	15-15
BD237	15-15
BD239	15-15
BD239A	15-15
BD239B	15-15
BD239C	15-15
BD240	15-15
BD240A	15-15
BD240B	15-15
BD240C	15-15
BD241	15-15
BD241A	15-15
BD241B	15-15
BD241C	15-15
BD2412C	15-15
BD242	15-15
BD242A	15-15
BD242B	15-15
BD242C	15-15
BD243	15-15
BD243A	15-15
BD243B	15-15
BD243C	15-15
BD244	15-15
BD244B	15-15
BD245	15-16
BD245A	15-16
BD245B	15-16
BD246	15-16
BD246B	15-16
BD246C	15-16
BD249	15-16
BD249A	15-16
BD249B	15-16
BD249C	15-16
BD250	15-16
BD250A	15-16
BD250B	15-16
BD250C	15-16
BD311	15-16
BD312	15-16
BD313	15-16
BD314	15-16
BD315	15-16
BD317	15-16
BD318	15-16
BD385	15-16
BD386	15-16
BD387	15-16
BD388	15-16
BD389	15-16
BD390	15-16
BD411	15-16
BD412	15-16
BD413	15-16
BD414	12-5
BD433	15-16
BD434	15-16
BD435	15-16
BD436	15-16
BD437	15-16
BD438	15-16
BD439	15-16
BD440	15-16
BD441	15-16
BD442	15-16
BD533	15-16
BD534	15-16
BD535	15-16
BD536	15-16
BD538	15-17
BD675	15-17
BD675A	15-17
BD676A	15-17

Device Type	Page
BD746B	15-17
BD746C	15-17
BD775	15-16
BD776	15-17
BD777	15-17
BD778	15-17
BD780	15-17
BD785	15-17
BD786	15-17
BD788	15-17
BD789	15-17
BD790	15-17
BD791	15-17
BD792	15-17
BD795	15-17
BD796	15-17
BD797	15-17
BD798	15-12
BD799	15-17
BD800	15-17
BD801	15-17
BD802	15-17
BD805	15-17
BD806	15-17
BD807	15-17
BD808	15-17
BD809	15-17
BD896	15-18
BD896A	15-18
BD897	15-18
BD897A	15-18
BD898	15-17
BD898A	15-18
BD899	15-18
BD899A	15-18
BD900	15-18
BD901	15-18
BD902	15-18
BFR90	20-13
BFR91	20-13
BFR96	20-13
BFW31	19-3
BFW92A	20-13
BFX16 5	19-24
BFX36	19-24
BFX38/9	19-8
BFX40/1	19-8
BFX89	20-13
BFY50/1/2	19-6
BFY81	19-24
BFY90	20-13
BF199	19-15
BF224	19-15
BF240	19-15
BF246/247	19-26
BF254	19-15
BF255	19-15
BF256	19-26
BF257/8/9	19-6
BF374	19-15
BF375	19-15
BF391	19-14
BF392	19-14
BF393	19-14
BF420	19-16
BF421	19-16
BF422	19-16
BF423	19-16
BF466	15-18
BF467	15-18
BF468	15-18
BF492	19-14
BF493	19-14
BF493	19-13

Device Type	Page
BF506	19-15
BF509	19-15
BF757	15-18
BF759	15-18
BF760	15-18
BF761	15-18
BF763	15-18
BF787	15-18
BF787	15-17
BF788	15-18
BF789	15-18
BF790	15-18
BF791	15-18
BF792	15-18
BF844	19-14
BF845	19-14
BF900	19-27
BF959	19-15
BF961	19-27
BRX40SERIES	16-2
BRY55SERIES	16-2
BSS50/1/2	19-8
BSS71/2/3	19-4
BSS74/5/6	19-4
BSS77/8	19-6
BSW21	19-3
BSW22	19-3
BSW22A	19-3
BSX29	19-4
BSX45/6/7	19-6
BSX51	19-3
BSX52	19-3
BS107	19-28
BS170	19-28
BUS36	15-18
BUS37	15-18
BUS45P	15-18
BUS46P	15-18
BUS47	15-18
BUS47A	15-18
BUS47AP	15-18
BUS48	15-18
BUS48A	15-18
BUS48AP	15-18
BUS48P	15-18
BUS98	15-18
BUS98A	15-18
BUT13	15-18
BUT14	15-18
BUT16	15-18
BUT33	15-18
BUT34	15-18
BUT35	15-19
BUT36	15-19
BUT50P	15-19
BUT51P	15-18
BUV10	15-19
BUV10N	15-19
BUV11	15-19
BUV11N	15-19
BUV12	15-19
BUV20	15-19
BUV21	15-19
BUV21N	15-19
BUV22	15-19
BUV23	15-19
BUV24	15-19
BUV25	15-19
BUV26	15-19
BUV27	15-19
BUX10CECC	15-19
BUX11CECC	15-19
BUX12CECC	15-19
BUX13	15-19

Device Type	Page
BUX13CECC	15-19
BUX14	15-19
BUX14CECC	15-19
BUX15	15-19
BUX15CECC	15-12
BUX39	15-19
BUX40	15-19
BUX41	15-19
BUX41N	15-19
BUX42	15-19
BUX43	15-19
BUX44	15-19
BUX45	15-19
BUX46	15-19
BUX47	15-19
BUX48	15-19
BUX80	15-19
BUX81	15-19
BUX82	15-19
BUX83	15-19
BUX84	15-19
BUX85	15-19
BUY49P	15-19
BUY69B	15-19
BUY69P	15-19
BU205	15-19
BU208	15-19
BU208A	15-20
BU209	15-20
BU323	15-20
BU323A	15-20
BU326	15-20
BU326A	15-20
BU406	15-20
BU407	15-20
BU508A	15-20
BU522	15-20
BU522A	15-20
BU522B	15-20
BYS35SERIES	17-15
BYS60SERIES	17-15
BYS75SERIES	17-15
BYT25-100	17-17
BYT25-200	17-17
BYT25-400	17-17
BYT25-50	17-17
BYT25-600	17-17
BYT25-800	17-17
BYT251000	17-17
BYV25-1000	17-17
BYV25-600	17-17
BYV25-800	17-17
BYW20	17-17
BYW21	17-17
BYW22	17-17
BYW24	17-17
BYW25-100	17-17
BYW25-200	17-17
BYW25-400	17-17
BYW25-50	17-17
BYW26	17-17
BYW28	17-17
BYW28	17-17
BYW29-100	17-11
BYW29-150	17-11
BYW29-50	17-11
BYW30-100	17-12
BYW31-100	17-12
BYW31-150	17-12
BYW51-150	17-11
BYW51-50	17-11
BYW60	17-17
BYW61	17-17
BYW62	17-17

Device Type	Page
BYW64	17-17
BYW66	17-17
BYW68	17-17
BYW77-150	17-12
BYW77-50	17-12
BYW78-100	17-13
BYW78-50	17-13
BYW79	17-17
BYW80-50	17-11
BYW81-50	17-12
BYW89	17-17
BYW90-100	17-3
BYW90-1000	17-3
BYW90-400	17-3
BYW90-50	17-3
BYW90-600	17-3
BYW90-800	17-3
BYW91-100	17-9
BYW91-200	17-9
BYW91-400	17-9
BYW91-50	17-9
BYW91-600	17-9
BYW92-100	17-13
BYW92150	17-13
BYW94-100	17-13
BYW94-100	17-13
BYW94-150	17-13
BYW94-150	17-13
BYW94-150	17-12
BYW94-50	17-13
BYX38-1200	17-4
BYX38-300	17-4
BYX38-600	17-4
BYX38-900	17-4
BYX42-300	17-5
BYX42-600	17-5
BYX42-900	17-5
BYX42R	17-5
BYX50SERIES	17-8
BYX55-350	17-10
BYX55-600	17-10
BYX61SERIES	17-8
BYX98-1200	17-4
BYX98-300	17-4
BYX98R	17-4
BYX99-1200	17-5
BYX99-300	17-5
BYX99-600	17-5
BYX99-900	17-5
BYX99R	17-5
BY127/133	17-2
BY196	17-10
BY197	17-10
BY198	17-10
BY199	17-10
BY206	17-10
BY207	17-10
BY208-1000	17-10
BY208-600	17-10
BY208-800	17-10
BY210-4	17-19
BY210-6	17-10
BY210-8	17-10
BY251	17-2
BY252	17-2
BY253	17-2
BY254	17-2
BY255	17-2
BY296	17-10
BY298	17-10
BY298	17-10
BY299	17-10
BY299	17-10
BY396	17-10

Device Type	Page
BY397	17-10
BY398	17-10
BY406	17-10
BY407	17-10
BY500SERIES	17-7
BY601	17-2
BY602	17-2
BY603	17-2
BY604	17-2
BY605	17-2
BY607	17-2
BY608	17-2
BZX55SERIES	18-4
BZX79SERIES	18-4
BZX83SERIES	18-4
BZX85SERIES	18-4
BZY86SERIES	18-4
BZY88SERIES	18-4
CN 74LS374	10-10
C106 SERIES	16-3
C106 SERIES	16-11
C122 SERIES	16-3
C228 SERIES	16-7
C229 SERIES	16-7
C230 SERIES	16-6
C232 SERIES	16-7
DAC/08	7-22
DS8641	7-4
FHMF0D402F	22-9
G1006	17-4
G1010	17-5
G1106	17-4
G1110	17-5
G2006	17-4
G2110	17-5
G3006	17-4
G3010	17-5
G5006	17-4
G5010	17-5
G506	17-4
G506R	17-4
G510	17-5
G510R	17-5
G6006	17-4
G6010	17-5
G8006	17-4
G8010	17-5
HA1199	12-5
H11A SERIES	22-2
H11B SERIES	22-2
J308	19-26
LF156	6-3
LF157	6-3
LF255	6-3
LF256	6-3
LF257	6-3
LF355	6-3
LF356/A/B	6-3
LF357/A/B	6-3
LM 2904	6-4
LM107	6-2
LM108	6-2
LM109	6-6
LM111	7-29
LM117	6-9
LM117L	6-8
LM123	6-6
LM124	6-5
LM127M	6-9
LM137	6-9
LM139	7-30
LM140-12	6-7
LM140-15	6-7
LM140-18	6-8

Device Type	Page
LM140-24	6-8
LM140-5	6-6
LM148	6-5
LM150	6-9
LM158	6-4
LM193SERIES	7-29
LM201	6-2
LM207	6-3
LM209	6-6
LM211	7-29
LM217	6-9
LM217L	6-8
LM217M	6-8
LM223	6-6
LM224	6-5
LM237	6-9
LM237M	6-9
LM239	7-30
LM248	6-5
LM250	6-9
LM2901	7-30
LM2902	6-5
LM307	6-3
LM308	6-2
LM311	7-29
LM317	6-9
LM317L	6-8
LM317M	6-8
LM323	6-6
LM324	6-5
LM337	6-9
LM339	7-30
LM340-12	6-7
LM340-15	6-7
LM340-18	6-8
LM340-24	6-8
LM340-5	6-6
LM340-6	6-6
LM340-8	6-7
LM348	6-5
LM350	6-9
LM358	6-4
LM385	6-9
L14HSERIES	22-6
M TRA2504	17-3
M C 14490	5-2
M C 14504B	5-2
M C 14572UB	5-3
MA C228 SERIES	16-15
MAC15 SERIES	16-17
MAC15 SERIES	16-17
MAC216 SERIES	16-14
MAC223 SERIES	16-18
MAC50 SERIES	16-19
MAC515 SERIES	16-17
MAC525 SERIES	16-18
MAC90 SERIES	16-12
MBD SERIES	21-7
MBR100SERIES	17-14
MBR1000SERIES	17-14
MBR1500SERIES	17-14
MBR2500SERIES	17-14
MBR300SERIES	17-14
MBR3000SERIES	17-15
MBR3500SERIES	17-15
MBR4000SERIES	17-15
MBR6000SERIES	17-15
MBR7500SERIES	17-15
MBS4991/2	16-21
MC MMH0026	7-12
MC SN 54LS11	10-9
MC M 10145	10-4
MC 144110	5-2
MC 145000	5-2

Device	Type	Page
MC	145001	5-2
MC	145100	5-3
MC	3486	7-15
MC	74-MC54HC42	5-7
MC	34060	6-12
MC	35002/A/B	6-4
MC	10H210	10-5
MC	1306	12-5
MC	1309	12-4
MC	1310	12-4
MC	1327AB	12-2
MC	14U2 00U2	6-10
MC	1400/ U2/AU2	7-27
MC	1400U10	6-11
MC	1400U5	6-10
MC	1400U6	6-11
MC	1403/A	6-10
MC	1403/1503	7-27
MC	1404/1504	7-27
MC	1404U10	6-11
MC	1404U5	6-10
MC	1405	7-25
MC	1408/1508	7-22
MC	1414/1514	7-28
MC	1417	7-20
MC	1422	6-18
MC	1436	6-3
MC	1437	6-4
MC	1438R	6-18
MC	1445	6-15
MC	1454	6-17
MC	1455	6-18
MC	1456	6-3
MC	14562B	5-3
MC	1458/C/N/S	6-4
MC	1463	6-9
MC	1466	6-10
MC	1468	6-10
MC	1469	6-8
MC	1472	7-20
MC	1488	7-15
MC	1489	7-15
MC	1494	6-17
MC	1495	6-17
MC	1496	6-17
MC	1500US	6-10
MC	1500U10	6-11
MC	1500U5	6-10
MC	1500U6	6-11
MC	1503/A	6-10
MC	1504U10	6-11
MC	1504U5	6-10
MC	1504U6	6-11
MC	1505	7-25
MC	1536	6-3
MC	1537	6-4
MC	1538R	6-18
MC	1545	6-15
MC	1554	6-17
MC	1555	6-18
MC	1556	6-3
MC	1558/N/S	6-4
MC	1563	6-9
MC	1566	6-10
MC	1568	6-10
MC	1569	6-8
MC	1590	6-15
MC	1594	6-17
MC	1595	6-17
MC	1596	6-17
MC	1648	10-6
MC	1650/MC1651	10-6
MC	1654	10-6
MC	1660	10-6
MC	1664	10-6
MC	1666	10-6
MC	1668	10-6
MC	1670	10-6
MC	1672	10-6
MC	1674	10-6
MC	1678	10-6
MC	1688	10-6
MC	1690	10-6
MC	1692	10-6
MC	1694	10-6
MC	1697	10-6
MC	1699	10-6
MC	1710/11	7-28
MC	1723	6-8
MC	1733/C	6-15
MC	1733C	6-3
MC	1741	6-2
MC	1741C	6-3
MC	1741N/S	6-2
MC	1741NC	6-3
MC	1741SC	6-3
MC	1747	6-4
MC	1747C	6-4
MC	1776	6-3
MC	1776C	6-3
MC	2801	12-3
MC	2828	12-5
MC	3001	10-19
MC	3002	10-19
MC	3003	10-19
MC	3007	10-19
MC	3021	10-19
MC	3022	10-19
MC	3025	10-19
MC	3026	10-19
MC	3028	10-19
MC	3051	10-19
MC	3052	10-19
MC	3060	10-19
MC	3061	10-19
MC	3062	10-19
MC	3101	10-19
MC	3102	10-19
MC	3121	10-19
MC	3122	10-19
MC	3125	10-19
MC	3126	10-19
MC	3128	10-19
MC	3129	10-19
MC	3151	10-19
MC	3152	10-19
MC	3156	10-19
MC	3160	10-19
MC	3161	10-19
MC	3301	6-5
MC	3303	6-5
MC	3333	14-1
MC	3340	12-4
MC	3341	12-4
MC	3344	14-1
MC	3346	12-4
MC	3357	12-4
MC	3358	6-4
MC	3359	12-4
MC	3386	12-4
MC	3393	12-4
MC	3396	12-4
MC	3401	6-5
MC	3403	6-5
MC	3405	6-18
MC	3417/18	11-15
MC	3420	6-12
MC	3423	6-13
MC	3423P	6-1
MC	3424 3525U	6-14
MC	3425U/P	6-14
MC	3456	6-18
MC	3458	6-4
MC	3503	6-5
MC	3505	6-18
MC	3517/8	11-15
MC	3520	6-12
MC	3523U	6-13
MC	3524L	6-13
MC	3556	6-19
MC	3558	6-4
MC	4558	6-4
MC	4558C	6-4
MC	4734B	5-3
MC	4741	6-5
MC	6L70	5-3
MC	6170	11-09
MC	6203	5-3
MC	6215	5-3
MC	6220	5-3
MC	6828	8-4
MC	7805	6-6
MC	7805A/B/AC	6-6
MC	7812/A/B/C/AC	6-7
MC	7815/A/B/C/AC	6-7
MC	7818/A/B/C	6-7
MC	7902C	6-4
MC	7905.2C	6-6
MC	7905/C/AC	6-6
MC	7908C	6-7
MC	7912C	6-7
MC	7918C	6-7
MC	7924C	6-8
MC	8500	8-4
MC	8501	8-4
MC	8502	8-4
MC	8503	8-4
MC	8504	8-4
MC	8506	8-4
MC	8507	8-4
MC	8520	8-4
MC	0 10808	8-3
MC	1 16662	10-6
MC	10H101	10-5
MC	10H102	10-5
MC	10H104	10-5
MC	10H105	10-5
MC	10H107	10-5
MC	10H109	10-5
MC	10H116	10-5
MC	10H117	10-5
MC	10H118	10-5
MC	10H119	10-5
MC	10H121	10-5
MC	10H130	10-5
MC	10H131	10-5
MC	10H136	10-5
MC	10H145	10-5
MC	10H1451	10-5
MC	10H161	10-5
MC	10H162	10-5
MC	10H164	10-5
MC	10H173	10-5
MC	10H174	10-5
MC	10H175	10-5
MC	10H176	10-5
MC	10H179	10-5
MC	10H180	10-5
MC	10H181	10-5
MC	10H211	10-5
MC	10100	10-2
MC	10101	10-2

Device Type	Page	Device Type	Page	Device Type	Page
MC 10102	10-2	MC 10501	10-2	MC 14000UB	5-2
MC 10103	10-2	MC 10502	10-2	MC 14001B	5-2
MC 10104	10-2	MC 10503	10-2	MC 14006B	5-2
MC 10105	10-2	MC 10504	10-2	MC 14008B	5-2
MC 10106	10-2	MC 10505	10-2	MC 14011B	5-2
MC 10107	10-2	MC 10506	10-2	MC 14012B	5-2
MC 10109	10-2	MC 10507	10-2	MC 14013B	5-2
MC 10110	10-2	MC 10509	10-2	MC 14014B	5-2
MC 10111	10-2	MC 10513	10-2	MC 14015B	5-2
MC 10113	10-2	MC 10514	10-2	MC 14016B	5-2
MC 10114	10-2	MC 10515	10-2	MC 14017B	5-2
MC 10115	10-2	MC 10516	10-2	MC 14018B	5-2
MC 10116	10-2	MC 10517	10-2	MC 14019B	5-2
MC 10117	10-2	MC 10518	10-2	MC 14020B	5-2
MC 10118	10-2	MC 10519	10-2	MC 14021B	5-3
MC 10119	10-2	MC 10521	10-2	MC 14022B	5-2
MC 10121	10-2	MC 10524	10-2	MC 14023B	5-2
MC 10123	10-3	MC 10525	10-2	MC 14024	5-2
MC 10124	10-2	MC 10530	10-3	MC 14025B	5-2
MC 10125	10-2	MC 10531	10-3	MC 14027	5-2
MC 10128	10-3	MC 10532	10-3	MC 14028B	5-2
MC 10129	10-2	MC 10533	10-3	MC 14029B	5-2
MC 10130	10-3	MC 10534	10-3	MC 14030B	5-2
MC 10131	10-3	MC 10535	10-3	MC 14031B	5-2
MC 10132	10-3	MC 10541	10-3	MC 14032B	5-2
MC 10133	10-3	MC 10553	10-3	MC 14034B	5-2
MC 10134	10-3	MC 10558	10-3	MC 14035B	5-2
MC 10135	10-3	MC 10559	10-3	MC 14038B	5-2
MC 10136	10-3	MC 10561	10-3	MC 14040B	6 5
MC 10137	10-3	MC 10562	10-3	MC 14042B	5-2
MC 10138	10-3	MC 10563	10-3	MC 14043B	5-2
MC 10141	10-3	MC 10564	10-3	MC 14044B	5-2
MC 10153	10-3	MC 10565	10-3	MC 14046B	5-2
MC 10154	10-3	MC 10570	10-4	MC 14047B	5-2
MC 10158	10-3	MC 10571	10-3	MC 14049UB	5-2
MC 10159	10-3	MC 10572	10-3	MC 14050B	5-2
MC 10160	10-3	MC 10574	10-3	MC 14051B	5-2
MC 10161	10-3	MC 10575	10-3	MC 14052B	5-2
MC 10162	10-3	MC 10576	10-3	MC 14055B	5-2
MC 10164	10-3	MC 10578	10-3	MC 14056B	5-2
MC 10165	10-3	MC 10579	10-4	MC 14057B	5-2
MC 10166	10-4	MC 10580	10-4	MC 14061	5-2
MC 10168	10-3	MC 10581	10-4	MC 14063B	5-2
MC 10170	10-4	MC 10582	10-4	MC 14069UB	5-2
MC 10171	10-3	MC 10586	10-4	MC 14070B	5-2
MC 10171	10-3	MC 10586	10-4	MC 14071B	5-2
MC 10173	10-3	MC 10590	10-4	MC 14072B	5-2
MC 10174	10-3	MC 10591	10-4	MC 14073B	5-2
MC 10176	10-3	MC 10593	10-3	MC 14075B	5-2
MC 10177	10-2	MC 10594	10-4	MC 14076B	5-2
MC 10178	10-3	MC 10595	10-2	MC 14077B	5-2
MC 10179	10-4	MC 10597	10-2	MC 14078B	5-2
MC 10180	10-4	MC 10610	10-2	MC 14081B	5-2
MC 10181	10-4	MC 10611	10-2	MC 14082B	5-2
MC 10182	10-4	MC 10616	10-2	MC 14085B	5-2
MC 10183	10-4	MC 10631	10-3	MC 14094B	5-2
MC 10186	10-4	MC 10687	10-4	MC 14099B	5-2
MC 10188	10-2	MC 10800	8-3	MC 14161B	5-2
MC 10189	10-2	MC 10801	8-3	MC 14162B	5-2
MC 10190	10-4	MC 10803	8-3	MC 14163B	5-2
MC 10191	10-4	MC 10804	8-3	MC 14174B	5-2
MC 10192	10-3	MC 10805	8-3	MC 14194B	5-2
MC 10193	10-3	MC 10806	8-3	MC 14400/01/01 2	11-4
MC 10194	10-4	MC 10807	8-3	MC 14408	5-2
MC 10195	10-2	MC 10809	8-3	MC 14408/9	11-11
MC 10197	10-2	MC 10900Z	8-3	MC 14409	5-2
MC 10198	10-3	MC 10901Z	8-3	MC 14410	11-10
MC 10211	10-2	MC 10902Z	8-3	MC 14410	5-2
MC 10212	10-2	MC 10904Z	8-3	MC 14411	11-9
MC 10216	10-2	MC 12 349	12-2	MC 14411	5-2
MC 10231	10-3	MC 13 4512B	5-3	MC 14412	5-2
MC 10287	10-4	MC 13001	12-12	MC 14412	11-8
MC 10317	7-25	MC 13001	12-2	MC 14413	5-2
MC 10500	10-2	MC 13002	12-2	MC 14413/14	11-3

Device Type	Page
MC 14415	5-2
MC 14416	11-6
MC 14416	5-2
MC 14417	5-2
MC 14417/18	11-5
MC 14418	5-2
MC 14419	11-12
MC 14419	5-2
MC 14424	5-2
MC 14426	5-2
MC 14429	5-2
MC 14433	5-2
MC 14435	5-2
MC 14435	7-25
MC 14443	5-2
MC 14444	5-2
MC 14447	5-2
MC 14449	5-2
MC 14466	5-2
MC 14469	5-2
MC 14493	5-2
MC 14494	5-2
MC 14497	5-2
MC 14499	5-2
MC 14500B	5-2
MC 14501UB	5-2
MC 14502B	5-2
MC 14503B	5-2
MC 14506B	5-3
MC 14507	5-3
MC 14510B	5-3
MC 14511B	5-3
MC 14513B	5-3
MC 14514B	5-3
MC 14515B	5-3
MC 14516B	5-3
MC 14517B	5-3
MC 14517B	5-3
MC 14518B	5-3
MC 14518B	5-3
MC 14518B	5-2
MC 14519B	5-3
MC 14520B	5-3
MC 14522B	5-3
MC 14526B	5-3
MC 14527B	5-3
MC 14528B	5-3
MC 14529B	5-3
MC 14530B	5-3
MC 14531B	5-3
MC 14532B	5-3
MC 14534B	5-3
MC 14536B	5-3
MC 14538B	5-3
MC 14539B	5-3
MC 14541B	5-3
MC 14543B	5-3
MC 14547B	5-3
MC 14549B	5-3
MC 14551B	5-3
MC 14553B	5-3
MC 14554B	5-3
MC 14555B	5-3
MC 14556B	5-3
MC 14557B	5-3
MC 14558B	5-3
MC 14559B	5-3
MC 14560B	5-3
MC 14561B	5-3
MC 14566B	5-3
MC 14568B	5-3
MC 14573	5-3
MC 14574	5-3
MC 14575	5-3
MC 14580B	5-3

Device Type	Page
MC 14599B	5-3
MC 34001	6-3
MC 34002/A/B	6-4
MC 34004	6-5
MC 34019	11-2
MC 34022/A/B	6-4
MC 35001/A/B	6-3
MC 35004	6-5
MC 35004A/B	6-5
MC 35022/A/B	6-4
MC 35060	6-12
MC 4000LP	10-17
MC 4002LP	10-17
MC 4006LP	10-17
MC 4007LP	10-17
MC 4008LP	10-17
MC 4010LP4	10-17
MC 4012LP	10-17
MC 4015	10-17
MC 4016LP	10-17
MC 4017LP	10-17
MC 4019LP	10-17
MC 4021LP	10-17
MC 4022LP	10-17
MC 4023LP	10-17
MC 4023LP	10-17
MC 4024LP	10-17
MC 4066B	5-2
MC 4302FL	10-17
MC 4307FL	10-17
MC 4308FL	10-17
MC 431 21FL	10-17
MC 4310FL	10-17
MC 4312FL	10-17
MC 4315FL	10-17
MC 4316FL	10-17
MC 4317FL	10-17
MC 4318FL	10-17
MC 4319FL	10-17
MC 4322FL	10-17
MC 4323FL	10-17
MC 4324FL	10-17
MC 54F00	10-16
MC 54F02	10-16
MC 54F04	10-16
MC 54F08	10-16
MC 54F10	10-16
MC 54F109	10-16
MC 54F11	10-16
MC 54F139	10-11
MC 54F20	10-15
MC 54F240	10-16
MC 54F241	10-16
MC 54F242	10-16
MC 54F243	10-16
MC 54F244	10-16
MC 54F32	10-16
MC 54F373	10-16
MC 54F374	10-16
MC 54F533	10-16
MC 54F534	10-16
MC 54F74	10-16
MC 7 10905Z	8-3
MC 74F00	10-16
MC 74F03	10-16
MC 74F04	10-16
MC 74F08	10-16
MC 74F10	10-16
MC 74F109	10-16
MC 74F11	10-16
MC 74F138	10-16
MC 74F139	10-16
MC 74F20	10-16
MC 74F240	10-16

Device Type	Page
MC 74F241	10-16
MC 74F242	10-16
MC 74F243	10-16
MC 74F244	10-16
MC 74F32	10-16
MC 74F373	10-16
MC 74F374	10-16
MC 74F533	10-16
MC 74F534	10-16
MC 74F74	10-16
MC 78L05AC	6-6
MC 78L05C	6-6
MC 78L08C/AC	6-7
MC 78L12C/AC	6-7
MC 78L15A/C	6-7
MC 78L15C/AC	6-7
MC 78L18C/AC	6-7
MC 78L24C/AC	6-8
MC 78M05C	6-6
MC 78M06/V A/B/C/AC	6-6
MC 78M12C	6-7
MC 78M15	6-7
MC 78M18C	6-7
MC 78M20C	6-8
MC 78M24C	6-8
MC 78T05/A/C/AC	6-6
MC 78T06/C	6-6
MC 78T08/C	6-7
MC 78T12/A/C/AC	6-7
MC 78T15/A/C/AC	6-7
MC 78T18/C	6-8
MC 78T24	6-8
MC 78T24C	6-8
MC 7824/A/B/C/AC	6-8
MC 79L03AC	6-6
MC 79L03C	6-6
MC 79L05AC	6-6
MC 79L05C	6-6
MC 79L12C/AC	6-7
MC 79L18C/AC	6-7
MC 79L24/ C/AC	6-8
MC 79M08C	6-7
MCA 500ALS	8-2
MCA 600ECL	8-2
MCA 1200ECL	8-2
MCA 1800ALS	8-2
MCA 2500ECL	8-2
MCC 3103	10-19
MCC3107	10-19
MCM 5101	5-3
MCM 7621	9-2
MCM 7641	9-2
MCM 7643	9-2
MCM 7681	9-2
MCM 7685	9-2
MCM 7689	9-2
MCM 10139	9-2
MCM 10139	10-4
MCM 10143	10-4
MCM 10143/4/5/6/7	9-2
MCM 10144	10-4
MCM 10146	10-4
MCM 10147	10-4
MCM 10148	10-4
MCM 10149	10-4
MCM 10149	9-2
MCM 10152	10-4
MCM 10152	9-2
MCM 10152	10-4
MCM 10422	9-2
MCM 10422	10-4
MCM 10470	10-4
MCM 10470	9-2
MCM 10474	9-2

Device Type	Page
MCM 10474	10-4
MCM 14505	5-3
MCM 14524	5-3
MCM 14537	5-3
MCM 14552	5-3
MCM 65516	5-3
MCM 76161	9-2
MCM 93415	9-2
MCM 93422	9-2
MCM 93425	9-2
MCM144102	5-3
MCM14524	4-4
MCM21L14P20/25/30/45	4-2
MCM21L15AC45/70	4-2
MCM21L25AC45/70	4-2
MCM2114P20/25/30/45	4-2
MCM2115AC45/55/70	4-2
MCM2125AC45/55/70	4-2
MCM2147C55/70/85	4-2
MCM2532C	4-3
MCM27A08C	4-3
MCM2708C	4-3
MCM2801P	4-3
MCM2802P	4-3
MCM2815P	4-3
MCM2815P35	4-3
MCM2816	4-3
MCM2832P	4-3
MCM2832P25	4-3
MCM2832P35	4-3
MCM4027AC-2	4-2
MCM4027AC-2/3/4	4-2
MCM4116DP15/20/25	4-2
MCM4517P10/12/15/20	4-2
MCM51L01P45/65	4-3
MCM5101P65/80	4-3
MCM65116C12/15/20	4-3
MCM65147C55/70/85	4-3
MCM65516P43	4-4
MCM65516P55	4-4
MCM66L41P20/25/30/45	4-2
MCM6641P20/25/30/45	4-2
MCM6664AL12/15/20	4-2
MCM66665AL12/15/20	4-2
MCM6670 14P	4-4
MCM6670P	4-4
MCM66700P	4-4
MCM66710P	4-4
MCM66720P	4-4
MCM66730P	4-4
MCM66734P	4-4
MCM6674P	4-4
MCM66740P	4-4
MCM66750P	4-4
MCM66760P	4-4
MCM66770P	4-4
MCM66780P	4-4
MCM66790P	4-4
MCM668A10	4-2
MCM668B10	4-2
MCM66810	4-2
MCM68A316AP	4-4
MCM68A316EP	4-4
MCM68A316EP91	4-4
MCM68A332P	4-4
MCM68A364P	4-4
MCM68A364P3	4-4
MCM68B364P	4-4
MCM68365P25	4-4
MCM68365P35	4-4
MCM68366P25	4-4
MCM68366P35	4-4
MCM68764C	4-3
MCM68764C35	4-3

Device Type	Page
MCM68766C	4-3
MCM68766C35	4-3
MCR100SERIES	16-2
MCR1718 SERIES	16-9
MCR22 SERIES	16-11
MCR23 SERIES	16-11
MCR3835	16-7
MCR3918SERIES	16-5
MCR3935	16-7
MCR525SERIES	16-6
MCR568 SERIES	16-10
MCR600SERIES	16-3
MCR63 SERIES	16-8
MCR64 SERIES	16-8
MCR649A8/10	16-6
MCR65 SERIES	16-8
MCR67 SERIES	16-10
MCR68 SERIES	16-10
MCR69 SERIES	16-10
MCR70 SERIES	16-10
MCR71 SERIES	16-10
MCR72	16-3
MCR720 SERIES	16-9
MCT271	22-2
MCT272	22-2
MCT275	22-2
MCT277	22-2
MCV12011	10-7
MC1 14404/06/07	11-3
MC10 907	10-21
MC10136	10-8
MC10137	10-8
MC10138	10-8
MC10178	10-8
MC10178	10-8
MC10318L/L9	7-22
MC10538	10-8
MC10578	10-8
MC10800	3-2
MC10801	3-3
MC10802	3-3
MC10803	3-3
MC10804/5	3-3
MC10806	3-3
MC10807	3-3
MC10808	3-3
MC12-16	10-7
MC12000	10-7
MC12002	10-7
MC12009	10-7
MC12012	10-7
MC12013	10-7
MC12014	10-7
MC12015	10-7
MC12017	10-7
MC12040	10-7
MC12060	10-7
MC12061	10-7
MC12071	10-7
MC124 540	10-7
MC12502	10-7
MC12509	10-7
MC12511	10-8
MC12513	10-7
MC12514	10-7
MC12560	10-7
MC12561	10-7
MC14001B	5-2
MC140085B	5-2
MC140097B	5-2
MC140101B	5-2
MC140106B	5-2
MC140108B	5-2
MC140160B	5-2

Device Type	Page
MC140161B	5-2
MC140162B	5-2
MC140163B	5-2
MC140173	5-2
MC140175B	5-2
MC140181B	5-2
MC140182B	5-2
MC140192B	5-2
MC140193B	5-2
MC140194B	5-2
MC140208B	5-2
MC14098B	5-2
MC141000	5-2
MC141000	3-2
MC141099	5-2
MC141200	5-2
MC141200	3-2
MC142100/145100	11-7
MC1439	6-2
MC144100	5-2
MC144111	5-2
MC144115	5-2
MC144115	5-2
MC144117	5-2
MC144117	5-2
MC14500B	3-2
MC145026	5-2
MC145027	5-2
MC145028	5-2
MC145104	5-3
MC145106	5-3
MC145107	5-3
MC145112	5-3
MC145143	5-3
MC145144	5-3
MC145145	5-3
MC145146	5-3
MC145151	5-3
MC145152	5-3
MC145155	5-3
MC145156	5-3
MC1466	6-10
MC146805E2	5-3
MC146805F2	5-3
MC146805F2	3-2
MC146805G2	3-2
MC146805G2	5-3
MC146818	3-3
MC146818	5-3
MC146823	3-3
MC1496	10-7
MC1539	6-2
MC1596	10-7
MC1648	10-7
MC1648M	10-7
MC1654	10-8
MC1678	10-8
MC1690	10-7
MC1697	10-7
MC1699	10-7
MC1900	10-21
MC1902	10-21
MC1903	10-21
MC1904	10-21
MC1905	10-21
MC1906	10-21
MC1908	10-21
MC1911	10-21
MC1912	10-21
MC1914	10-21
MC1918	10-21
MC208	6-2
MC26S10/11	7-8
MC3202	7-30

Device Type	Page
MC3232	3-3
MC3232/42/82	7-10
MC3242	3-3
MC3408	7-22
MC3410	7-22
MC3430/1/2/3	7-30
MC3437	7-4
MC3438	7-4
MC3440/1/3/6/8	7-7
MC3447	7-8
MC3449	3-3
MC3450	7-18
MC3452	7-18
MC3453	7-18
MC3467	7-13
MC3469	7-14
MC3470	7-13
MC3476	6-3
MC3480	7-9
MC3480	3-3
MC3481	7-6
MC348176	7-6
MC3482A/B	3-3
MC3485	7-6
MC3487	7-16
MC3488A	7-16
MC3510	7-22
MC3870	3-2
MC4016	10-8
MC4017	10-8
MC4018	10-8
MC4019	10-8
MC4023	10-8
MC4024	10-7
MC4038LP	10-18
MC4039LP	10-18
MC4040LP	10-18
MC4041LP	10-18
MC4042LP	10-18
MC4043LL P	10-18
MC4044	10-7
MC4044LP	10-18
MC4048LP	10-18
MC4050LP	10-18
MC4051LP	10-18
MC4052LP	10-18
MC4053LP	10-18
MC4054LP	10-18
MC4055LP	10-18
MC4056LP	10-18
MC4062LP	10-18
MC4064LP	10-18
MC4068LP	10-18
MC4316	10-8
MC4317	10-8
MC4318	10-8
MC4324	10-8
MC4342FL	10-18
MC4343FL	10-18
MC4344	10-7
MC4344FL	10-18
MC4350	10-18
MC4351	10-18
MC4352	10-18
MC4353	10-18
MC4353FL	10-18
MC4355FL	10-18
MC4356FL	10-18
MC4358	10-18
MC4362FL	10-18
MC4368FL	10-18
MC5490A	10-8
MC569 SERIES	16-10
MC660	10-22

Device Type	Page
MC661	10-22
MC662	10-22
MC663	10-22
MC664	10-22
MC665	10-22
MC666	10-22
MC667	10-22
MC668	10-22
MC669	10-22
MC670	10-22
MC671	10-22
MC672	10-22
MC673	10-22
MC674	10-22
MC675	10-22
MC676	10-22
MC677	10-22
MC678	10-22
MC679D	10-22
MC680	10-22
MC681	10-22
MC68120	3-3
MC68121	3-3
MC68122	3-3
MC682	10-22
MC6822	3-3
MC68230	3-3
MC6829	3-3
MC683	10-22
MC6839	3-3
MC684	10-22
MC6843	3-3
MC6844	3-3
MC6845	3-3
MC68450	3-3
MC68451	3-3
MC6846	3-3
MC6847	3-3
MC68488	3-3
MC685	10-22
MC6850	3-3
MC6852	3-3
MC6854	3-3
MC6859	3-3
MC686	10-22
MC6860	3-3
MC6862	3-3
MC63652	3-3
MC68653	3-3
MC68661	3-3
MC686821	3-3
MC6875/A	7-2
MC688	10-22
MC6880A/MC8T26A	7-12
MC6880A/MC8T26A	7-2
MC6881	3-3
MC6882A/B	3-3
MC6882A/MC3482A	7-3
MC6882A/MC3482A	7-12
MC6882A/MC3482A	7512
MC6882B/MC3482B	7-3
MC6882B/MC3482B	7-12
MC6885	3-3
MC6885/MC8T95	7-12
MC6885/MC8T95	7-3
MC6886/MC8T96	7-3
MC6886/MC8T96	7-12
MC6887/MC8T97	7-12
MC6887/MC8T97	7-3
MC6888/MC8T98	7-12
MC6888/MC8T98	7-3
MC6889/MC8T28	7-2
MC6889/MC8T28A	7-12
MC689	10-22

Device Type	Page
MC6890/A	7-24
MC6890/A	7-2
MC6891/A	7-2
MC6891/A	7-26
MC690	10-22
MC691	10-22
MC693	10-22
MC696	10-22
MC697	10-22
MC699	10-22
MC74-MC54HC00	5-7
MC74-MC54HC02	5-7
MC74-MC54HC04	5-8
MC74-MC54HC08	5-7
MC74-MC54HC10	5-7
MC74-MC54HC11	5-7
MC74-MC54HC132	5-7
MC74-MC54HC133	5-7
MC74-MC54HC139	5-7
MC74-MC54HC14	5-7
MC74-MC54HC147	5-7
MC74-MC54HC151	5-7
MC74-MC54HC154	5-7
MC74-MC54HC158	5-7
MC74-MC54HC20	5-7
MC74-MC54HC251	5-7
MC74-MC54HC253	5-7
MC74-MC54HC257	5-7
MC74-MC54HC266	5-7
MC74-MC54HC27	5-7
MC74-MC54HC30	5-7
MC74-MC54HC32	5-7
MC74-MC54HC354	5-7
MC74-MC54HC356	5-7
MC74-MC54HC365	5-7
MC74-MC54HC366	5-7
MC74-MC54HC367	5-7
MC74-MC54HC368	5-7
MC74-MC54HC4002	5-7
MC74-MC54HC4049	5-7
MC74-MC54HC4050	5-7
MC74-MC54HC4075	5-7
MC74-MC54HC4078	5-7
MC74-MC54HC4511 4	5-7
MC74-MC54HC4511	5-7
MC74-MC54HC4543	5-7
MC74-MC54H138	5-7
MC74-N MC54HC153	5-7
MC745 -MC54HC86	5-7
MC7490A	10-8
MC75S110	7-18
MC75125	7-5
MC75127	7-5
MC75128	7-5
MC75129	7-5
MC75325	7-14
MC75491/2	7-21
MC7906C	6-6
MC8T13/14	7-6
MC8T23/24	7-6
MC833	10-20
MC834	10-20
MC836	10-20
MC837	10-20
MC837	10-20
MC838	10-20
MC839	10-20
MC840	10-20
MC841	10-20
MC845	10-20
MC846	10-20
MC846	10-20
MC848	10-20
MC849	10-20

Device Type	Page
MC850	10-20
MC852	10-20
MC855	10-21
MC856	10-21
MC857	10-21
MC857	10-21
MC858	10-21
MC861	10-21
MC862	10-21
MC863	10-21
MC930	10-20
MC932	10-20
MC933	10-20
MC934	10-20
MC935	10-20
MC936	10-20
MC937	10-20
MC938	10-20
MC939	10-20
MC940	10-20
MC942	10-20
MC944	10-20
MC945	10-20
MC946	10-20
MC948	10-20
MC949	10-20
MC950	10-20
MC951	10-20
MC952	10-20
MC953	10-20
MC955	10-21
MC956	10-21
MC957	10-21
MC958	10-21
MC961	10-21
MC962	10-21
MC963	10-21
MDA200	17-17
MDA201	17-17
MDA202	17-17
MDA204	17-17
MDA206	17-17
MDA208	17-17
MDA210	17-17
MDA220	17-17
MDA2500	17-17
MDA2501	17-17
MDA2502	17-17
MDA2504	17-17
MDA2506	17-17
MDA920AB	17-17
MDA920A2	17-17
MDA920A3	17-17
MDA920A4	17-17
MDA920A6	17-17
MDA920A7	17-17
MDA920A9	17-17
MDA970A1	17-17
MDA970A2	17-17
MDA970A3	17-17
MDA970A5	17-17
MDA970A6	17-17
MD2219	19-24
MD2369	19-24
MD2905	19-24
MD3261	19-23
MD3762	19-24
MD5000	19-24
MD6003	19-24
MD7000	19-24
MD7001	19-23
MD7002	19-24
MD7003	19-24
MD7021	19-24

Device Type	Page
MD8003	19-23
MD918	19-24
MEX141000M	1-8
MEX146805	1-8
MEX68KDM	1-9
MEX68RR	2-2
MEX68SA2	1-8
MEX6801	1-8
MEX6801EVM/1	1-9
MEX6802-46	1-8
MEX6805	1-8
MEX6815-3	2-2
MEX6816-1HR	2-2
MEX6821-2	1-7
MEX6845	1-7
MEX68488	1-7
MEX6850	1-7
MEX6850-2	2-4
MEX6854	1-7
MFE521	19-27
MFE823	19-27
MFE9200	19-28
MFE930	19-28
MFE960	19-28
MFE990	19-28
MFOC600	22-8
MFOD100SERIES	22-7
MFOD200SERIES	22-7
MFOD300SERIES	22-7
MFOEI00SEREIS	22-7
MFOL01/2	22-9
MFOL02R	22-8
MFOL02T	22-8
MFOL02TY	22-9
MHQ2222	19-23
MHQ2369	19-23
MHQ2484	19-23
MHQ2907	19-23
MHQ3467	19-23
MHQ3546	19-23
MHQ4002	19-23
MHQ4014	19-23
MHW1121	20-16
MHW1122	20-16
MHW1171	20-16
MHW1171R	20-16
MHW1172	20-16
MHW1172R	20-16
MHW1182	20-16
MHW1221	20-16
MHW1222	20-16
MHW1341	20-16
MHW252	20-5
MHW401	20-6
MHW4171	20-17
MHW4172	20-17
MHW4341	20-17
MHW4342	20-17
MHW590	20-17
MHW591	20-17
MHW592	20-17
MHW593	20-17
MHW612	20-5
MHW613	20-3
MHW613	20-5
MHW709	20-6
MHW710	20-6
MHW720	20-6
MHW808	20-7
MHW820	20-7
MJE13002	15-20
MJE13003	15-20
MJE13004	15-20
MJE13005	15-20

Device Type	Page
MJE13005A	15-20
MJE13006	15-20
MJE13007	15-20
MJE13007A	15-20
MJE13008	15-20
MJE13009	15-20
MJE13009A	15-20
MJE15030	15-20
MJE15031	15-20
MJE16002	15-20
MJE16004	15-20
MJE200	15-20
MJE210	15-20
MJE240	15-20
MJE241	15-20
MJE250	15-20
MJE251	15-20
MJE253	15-20
MJE2955	15-20
MJE2955T	15-20
MJE3055	15-20
MJE3055T	15-20
MJE340	15-20
MJE370	15-20
MJE371	15-20
MJE4340	15-20
MJE4341	15-21
MJE4342	15-21
MJE4343	15-21
MJE4350	15-21
MJE4351	15-21
MJE4352	15-21
MJE4353	15-21
MJE51T	15-21
MJE52T	15-21
MJE520	15-21
MJE53T	15-21
MJE5850	15-21
MJE5852	15-21
MJE5951	15-21
MJE700T	15-21
MJE702T	15-21
MJE702T	15-21
MJE703T	15-21
MJE800T	15-21
MJE801T	15-21
MJE803T	15-21
MJE8500	15-21
MJE8501	15-21
MJE8503	15-21
MJ1000	15-21
MJ10000	15-21
MJ10001	15-21
MJ10002	15-21
MJ10003	15-21
MJ10004	15-21
MJ10006	15-21
MJ10007	15-21
MJ10008	15-21
MJ10009	15-21
MJ10013	15-21
MJ10014	15-21
MJ10020	15-21
MJ10022	15-21
MJ10023	15-21
MJ10024	15-21
MJ10025	15-21
MJ10050	15-21
MJ10200	15-21
MJ11011	15-21
MJ11012	15-22
MJ11013	15-22
MJ11014	15-22
MJ11016	15-22
MJ11028	15-22

Device Type	Page	Device Type	Page	Device Type	Page
MJ11029	15-22	MPQ23907	19-23	MRF222	20-4
MJ11030	15-22	MPQ2483	19-23	MRF223	20-4
MJ11031	15-22	MPQ2484	19-23	MRF224	20-4
MJ11032	15-22	MPQ2906	19-23	MRF225	20-5
MJ11033	15-22	MPQ3467	19-23	MRF226	20-5
MJ13330	15-22	MPQ3546	19-23	MRF227	20-5
MJ13332	15-22	MPQ3725	19-23	MRF229	20-3
MJ13333	15-22	MPQ3762	19-23	MRF230	20-3
MJ13334	15-22	MPQ3799	19-23	MRF231	20-3
MJ14000	15-22	MPQ3904	19-23	MRF232	20-3
MJ14001	15-22	MPQ3906	19-23	MRF233	20-3
MJ14002	15-22	MPQ6002	19-23	MRF234	20-3
MJ14003	15-22	MPQ6842	19-23	MRF237	20-4
MJ14032	15-23	MPQ7043	19-23	MRF237	20-3
MJ15001	15-22	MPQ7053	19-23	MRF238	20-3
MJ15002	15-22	MPQ7093	19-23	MRF239	20-3
MJ15003	15-22	MPSA05/06	19-13	MRF239	20-4
MJ15004	15-22	MPSA13/14	19-16	MRF240	20-4
MJ15011	15-22	MPSA18	19-13	MRF240	20-3
MJ15015	15-22	MPSA25/26	19-16	MRF245	20-4
MJ15016	15-22	MPSA28/29	19-16	MRF247	20-4
MJ15022	15-22	MPSA42	19-14	MRF250	20-4
MJ15023	15-22	MPSA43	19-14	MRF260	20-4
MJ15024	15-22	MPSA44	19-14	MRF261	20-4
MJ15025	15-22	MPSA45	10-9	MRF2612	20-4
MJ15026	15-22	MPSA55/56	19-13	MRF2623	20-4
MJ15027	15-22	MPSA63/64	19-16	MRF264	20-4
MJ16002	15-22	MPSA75/75 6/77	19-16	MRF309	20-9
MJ16004	15-22	MPSA92	19-14	MRF313	20-9
MJ16006	15-22	MPSA93	19-14	MRF3134	20-8
MJ16008	15-22	MPSD01/2/3	19-14	MRF315	20-8
MJ16010	15-22	MPSD51/2/3	19-14	MRF317	20-8
MJ16012	15-22	MPSH54	19-15	MRF321	20-9
MJ16014	15-22	MPSL01	19-14	MRF323	20-9
MJ16016	15-22	MPSL51	19-14	MRF325	20-9
MJ2500	15-22	MPSU01	15-23	MRF326	20-9
MJ2501	15-22	MPSU05	15-23	MRF327	20-9
MJ2955	15-22	MPSU067	15-23	MRF328	20-9
MJ2955A	15-22	MPSU07	15-23	MRF331	20-9
MJ3 E802T	15-21	MPSU10	15-23	MRF338	20-6
MJ3000	15-22	MPSU45	15-23	MRF340	20-8
MJ3001	15-22	MPSU51	15-23	MRF3423	20-8
MJ4030	15-22	MPSU55	15-23	MRF344	20-8
MJ4031	15-23	MPSU56	15-23	MRF401	20-8
MJ4033	15-23	MPSU57	15-23	MRF402	20-3
MJ4035	15-23	MPSU60	15-23	MRF406	20-2
MJ4400	15-23	MPSU95	15-23	MRF412	20-2
MJ4401	15-23	MPSW SERIES	19-18	MRF421	20-2
MJ4502	15-23	MPS2222	19-14	MRF422	20-8
MJ6502	15-23	MPS2369	19-15	MRF426	20-8
MJ6503	15-23	MPS3013	19-15	MRF427	20-8
MJ802	15-23	MPS3640	19-15	MRF428	20-8
MJ8501	15-23	MPS3646	19-15	MRF429	20-8
MJ8502	15-23	MPS3906	19-15	MRF432	20-2
MJ8504	15-23	MPS404	19-15	MRF433	20-2
MJ8505	15-23	MPS4257/8	19-15	MRF449	20-2
MJ900	15-23	MPS918	19-15	MRF450	20-2
MJ901	15-23	MPU131/2/3	16-20	MRF453	20-2
MLD90SERIES	22-5	MPZ5 SERIES	18-9	MRF454	20-2
MM 68MM12SWM	2-8	MQ2219	19-23	MRF455	20-2
MM4049	20-13	MQ2905	19-23	MRF458	20-2
MM8000	20-14	MQ3725	19-23	MRF460	20-2
MM8001	20-14	MQ6002	19-23	MRF464	20-8
MM8009	20-12	MRD14B	22-6	MRF466	20-8
MOC1000SERIES	22-2	MRD3000SERIES	22-6	MRF475	20-2
MOC3000SERIES	22-4	MRD500SERIES	22-5	MRF475	20-2
MOC3000SERIES	22-3	MRF1000SERIES	20-10	MRF476	20-2
MOC5000SERIES	22-3	MRF2000SERIES	20-10	MRF476	20-2
MOC600SERIES	22-4	MRF207	20-5	MRF477	20-2
MOC8000SERIES	22-2	MRF208	20-5	MRF479	20-2
MPN3400SERIES	21-7	MRF209	20-5	MRF486	20-8
MPQ2221	19-23	MRF212	20-4	MRF492	20-3
MPQ2222	19-23	MRF215	20-4	MRF497	20-3
MPQ2369	19-23	MRF216	20-4	MRF501	20-14

Device Type	Page
MRF501	20-13
MRF502	20-13
MRF511	20-13
MRF517	20-14
MRF525	20-14
MRF525	20-9
MRF554	20-6
MRF5559	20-7
MRF604	20-4
MRF607	20-4
MRF626	20-6
MRF627	20-6
MRF628	20-6
MRF642	20-6
MRF644	20-6
MRF646	20-6
MRF648	20-6
MRF660	20-6
MRF717	20-13
MRF750	20-6
MRF752	20-6
MRF754	20-6
MRF8003	20-2
MRF8004	20-2
MRF816	20-7
MRF817	20-7
MRF838	20-7
MRF840	20-7
MRF842	20-7
MRF844	20-7
MRF844	20-7
MRF846	20-7
MRF870	20-7
MRF905	20-12
MRF914	20-13
MRF961	20-13
MRF962	20-13
MRF965	20-13
MR1/1000	17-16
MR1/1200	17-16
MR1/1400	17-16
MR1/1600	17-16
MR1120	17-2
MR1121	17-2
MR1122	17-2
MR1124	17-2
MR1128	17-2
MR1130	17-2
MR1366	17-8
MR1376	17-8
MR1386	17-8
MR2001S	17-3
MR2002S	17-3
MR2004S	17-3
MR2005S	17-3
MR2008S	17-3
MR2010	17-3
MR2100SERIES	17-8
MR2500	17-3
MR2501	17-3
MR2501	17-3
MR2504	17-3
MR2506	17-3
MR2508	17-3
MR2510	17-3
MR2520	17-16
MR2525	17-16
MR328	17-3
MR331	17-3
MR3491	17-3
MR3492	17-3
MR3495	17-3
MR500	17-2
MR501	17-2

Device Type	Page
MR502	17-2
MR504	17-2
MR506	17-2
MR508	17-2
MR510	17-2
MR5102	17-9
MR5105	17-9
MR5106	17-9
MR5108	17-9
MR750	17-2
MR751	17-2
MR752	17-2
MR754	17-2
MR756	17-2
MR758	17-2
MR760	17-2
MR800SERIES	17-7
MR861	17-9
MR862	17-9
MR864	17-9
MR870	17-9
MR871	17-9
MR872M	17-9
MR874	17-9
MR876	17-9
MR900SERIES	17-7
MR966	17-9
MSD6100	19-16
MSD6102	19-16
MSD6150	19-16
MTMN85	15-11
MTM1N100	15-11
MTM1N95	15-11
MTM10N08	15-11
MTM10N10	15-11
MTM10N12	15-11
MTM10N15	15-11
MTM1034	15-11
MTM15N35	15-11
MTM15N40	15-2
MTM2N45	15-11
MTM2N50	15-11
MTM2N90	15-11
MTM2P45	15-13
MTM2P50	15-13
MTM3N35	15-11
MTM3N40	15-11
MTM3N60	15-11
MTM4N45	15-11
MTM4N50	15-11
MTM474	15-11
MTM475	15-11
MTM5N35	15-11
MTM5N40	15-11
MTM565	15-11
MTM7N45	15-11
MTM7N50	15-11
MTM8N12	15-11
MTM8N15	15-11
MTM8N18	15-11
MTM8N20	15-11
MTM8N35	15-11
MTM8N40	15-11
MTM814	15-13
MTM815	15-13
MTPN50	15-12
MTP1N100	15-12
MTP1N95	15-12
MTP10N06	15-12
MTP10N10	15-12
MTP10N12	15-12
MTP10N15	15-12
MTP10N8	15-12
MTP1034	15-12

Device Type	Page
MTP1035	15-12
MTP12N05	15-12
MTP12N06	15-12
MTP12N06	15-12
MTP1224	15-12
MTP1225	15-12
MTP2N45	15-12
MTP2N85	15-12
MTP2N90	15-12
MTP2P45	15-13
MTP2P50	15-13
MTP3N35	15-12
MTP3N40	15-12
MTP3N55	15-12
MTP3N60	15-12
MTP4N25	15-12
MTP4N50	15-12
MTP474	15-12
MTP475	15-12
MTP5N35	15-12
MTP5N40	15-12
MTP564	15-12
MTP565	15-12
MTP8N12	15-12
MTP8N15	15-12
MTP8N18	15-12
MTP8N18	15-12
MTP8N20	15-12
MTP814	15-13
MTP815	15-13
MUR105	17-11
MUR110	17-11
MUR115	17-11
MUR1605CT	17-11
MUR1610CT	17-11
MUR1615CT	17-11
MUR805	17-11
MUR810	17-11
MUR815	17-11
MU10	16-20
MU20	16-20
MU2646	16-20
MU4891/2/3/4	16-20
MU860	17-9
MV C 14175B	5-2
MV C 14544B	5-3
MVAM108	21-6
MVAM109	21-6
MVAM115	21-6
MVAM125	21-6
MV104/G	21-6
MV1400SERIES	21-5
MV1600SERIES	21-3
MV1600SERIES	21-4
MV1800SERIES	21-2
MV209	21-6
MV2100SERIES	21-3
MV2200SERIES	21-3
MV2300SERIES	21-4
MV309	21-6
MV310	21-6
MV800SERIES	21-3
MWASERIES	20-17
MZD SERIES	18-4
MZF SERIES	18-4
M146805E2	3-2
M68BASRC2	2-8
M68DIM2A	2-4
M68KBSA	1-3
M68KEXTM	1-3
M68KFD2102	1-3
M68KF22102	1-3
M68KHDE96-2	1-3
M68KHDS32-2	1-3

Device Type	Page
M68KHDS96-2	1-3
M68KH2E32-2	1-3
M68KMACSH2/F2	1-2
M68KMCCM	1-3
M68KUSE	1-3
M68KVAM	1-3
M68KVHC MCH1	2-12
M68KVMCC1	2-12
M68KVM01A1/2	2-10
M68KVM21/20/30	2-11
M68KWW	1-3
M68K128DP	1-3
M68K32DP	1-3
M68K64DP	1-3
M68MMCC10	2-9
M68MMFLC	2-9
M68MMLC	2-9
M68MMM 15A/B/BEX	2-4
M68MMPS2/1	2-9
M68MM01/B/A2/D	2-2
M68MM03	2-4
M68MM04/A	2-2
M68MM05/CV /CV	2-4
M68MM05A/B	2-4
M68MM06	2-2
M68MM07	2-4
M68MM09	2-2
M68MM1112 /12	2-4
M68MM13A/B/C/2	2-4
M68MM16/16A	2-4
M68MM17/19	2-2
M68MM19SB	2-8
M68MM23	2-4
M68M1000/155	2-9
M68PP4	1-8
M68PRT200N2	1-3
M68RTFR02M	2-8
M68SXD10255	1-3
M6800	3-2
M68000	3-2
M6801	3-2
M6802	3-2
M6802NS	3-2
M6803	3-2
M6805P2	3-2
M6805P4	3-2
M6805R2	3-2
M6805U2	3-2
M6808	3-2
M6809	3-2
M6809BASICN	2-8
M6809RMS09	2-8
M6809SA	1-8
M68701	3-2
M68705P3	3-2
M68705R3	3-2
M68705U3	3-2
N MHQ6002	19-23
N MJE701T	15-21
N MJ1001	15-21
N MJ8503	15-23
NA78540	6-12
NC 3325	14-1
NE565C	10-7
NN 2N2221	10-3
PBF259	19-16
PBF493	19-17
P2N290- 7	19-17
P6KE SERIES	18-9
R TRA1105	17-3
RP1020	17-6
RP1020R	17-6
RP1040	17-6
RP1040R	17-6

Device Type	Page
RP1120	17-6
RP1140	17-6
RP2020	17-6
RP2040	17-6
RP4020	17-6
RP4040	17-6
RP6020	17-6
RP6040	17-6
RP8020	17-6
RP8040	17-6
R710X	17-9
R711X	17-9
R712X	17-9
R714X	17-9
S MC4323	10-8
SAA1006	12-3
SAA1042	13-2
SC136 SERIES	16-13
SC146 SERIES	16-16
SC260 SERIES	16-18
SE/NE592	6-15
SG1526	6-12
SG2526	6-12
SG3526	6-12
SN 54LS90	10-11
SN 54ALS 620	10-15
SN 54ALS 241	10-15
SN 54ALS240	10-15
SN 54ALS242	10-15
SN 54ALS243	10-15
SN 54ALS244	10-15
SN 54ALS245	10-15
SN 54ALS621	10-16
SN 54ALS622	10-15
SN 54ALS623	10-15
SN 54ALS640	10-15
SN 54ALS641	10-15
SN 54ALS642	10-15
SN 54ALS643	10-15
SN 54ALS644	10-15
SN 54ALS646	10-15
SN 54ALS647	10-15
SN 54ALS648	10-15
SN 54ALS649	10-15
SN 54LS 169	10-11
SN 54LS00	10-9
SN 54LS01	10-9
SN 54LS02	10-9
SN 54LS03	10-9
SN 54LS04	10-9
SN 54LS05	10-9
SN 54LS08	10-9
SN 54LS09	10-9
SN 54LS1 299	10-10
SN 54LS10	10-9
SN 54LS107A	10-10
SN 54LS109A	10-10
SN 54LS112A	10-10
SN 54LS113A	10-10
SN 54LS12	10-9
SN 54LS125A	10-9
SN 54LS126A	10-9
SN 54LS13	10-9
SN 54LS132	10-9
SN 54LS133	10-9
SN 54LS137	10-11
SN 54LS138	10-11
SN 54LS139	10-11
SN 54LS14	10-9
SN 54LS145	10-11
SN 54LS145	10-11
SN 54LS15	10-9
SN 54LS151	10-11
SN 54LS151	10-11

Device Type	Page
SN 54LS153	10-11
SN 54LS155	10-11
SN 54LS156	10-11
SN 54LS157	10-11
SN 54LS158	10-11
SN 54LS160A	10-11
SN 54LS161A	10-11
SN 54LS162A	10-11
SN 54LS163A	10-11
SN 54LS164	10-10
SN 54LS165	10-10
SN 54LS166	10-10
SN 54LS167A	10-11
SN 54LS168	10-11
SN 54LS170	10-10
SN 54LS173	10-10
SN 54LS174	10-10
SN 54LS175	10-10
SN 54LS190	10-11
SN 54LS191	10-11
SN 54LS192	10-11
SN 54LS193	10-11
SN 54LS194A	10-10
SN 54LS195A	10-10
SN 54LS196	10-11
SN 54LS197	10-10
SN 54LS20	10-9
SN 54LS21	10-9
SN 54LS22	10-9
SN 54LS253	10-11
SN 54LS256	10-10
SN 54LS258A	10-11
SN 54LS259	10-10
SN 54LS259	10-11
SN 54LS26	10-9
SN 54LS260	10-9
SN 54LS27	10-9
SN 54LS273	10-10
SN 54LS279	10-10
SN 54LS28	10-9
SN 54LS290	10-11
SN 54LS293	10-11
SN 54LS295A	10-10
SN 54LS298	10-11
SN 54LS299	10-10
SN 54LS316	10-9
SN 54LS32	10-9
SN 54LS33	10-9
SN 54LS352	10-11
SN 54LS353	10-11
SN 54LS365A	10-9
SN 54LS366A	10-9
SN 54LS367A	10-9
SN 54LS368A	10-9
SN 54LS37	10-9
SN 54LS375	10-10
SN 54LS377	10-10
SN 54LS378	10-10
SN 54LS379	10-10
SN 54LS38	10-9
SN 54LS386	10-9
SN 54LS390	10-11
SN 54LS393	10-11
SN 54LS395	10-10
SN 54LS398	10-10
SN 54LS398	10-11
SN 54LS399	10-10
SN 54LS399	10-11
SN 54LS42	10-11
SN 54LS490	10-11
SN 54LS54	10-10
SN 54LS55	10-10
SN 54LS568	10-11
SN 54LS569	10-11

Device Type	Page
SN 54LS605	10-11
SN 54LS606	10-11
SN 54LS607	10-11
SN 54LS62A	10-11
SN 54LS621	10-13
SN 54LS622	10-13
SN 54LS641	10-13
SN 54LS642	10-13
SN 54LS644	10-13
SN 54LS668	10-11
SN 54LS669	10-11
SN 54LS670	10-10
SN 54LS673	10-10
SN 54LS674	10-10
SN 54LS716	10-11
SN 54LS718	10-11
SN 54LS73A	10-10
SN 54LS74	10-10
SN 54LS75	10-10
SN 54LS76A	10-10
SN 54LS77	10-10
SN 54LS78A	10-10
SN 54LS86	10-9
SN 54LS92	10-11
SN 54LS93	10-11
SN 54LS95B	10-10
SN 74ALS1 241	10-15
SN 74ALS240	10-15
SN 74ALS242	10-15
SN 74ALS243	10-15
SN 74ALS244	10-15
SN 74ALS245	10-15
SN 74ALS620	10-15
SN 74ALS621	10-15
SN 74ALS622	10-15
SN 74ALS623	10-15
SN 74ALS640	10-15
SN 74ALS641	10-15
SN 74ALS642	10-15
SN 74ALS643	10-15
SN 74ALS643	10-15
SN 74ALS644	10-15
SN 74ALS646	10-15
SN 74ALS647	10-15
SN 74ALS648	10-15
SN 74ALS649	10-15
SN 74LD10	10-9
SN 74LS 137	10-11
SN 74LS00	10-9
SN 74LS01	10-9
SN 74LS02	10-9
SN 74LS03	10-9
SN 74LS04	10-9
SN 74LS05	10-9
SN 74LS09	10-9
SN 74LS107A	10-10
SN 74LS109A	10-10
SN 74LS11	10-9
SN 74LS112A	10-10
SN 74LS113A	10-10
SN 74LS114A	10-10
SN 74LS12	10-9
SN 74LS125A	10-9
SN 74LS126A	10-9
SN 74LS13	10-9
SN 74LS132	10-9
SN 74LS133	10-9
SN 74LS136	10-9
SN 74LS14	10-9
SN 74LS145	10-11
SN 74LS15	10-9
SN 74LS151	10-11
SN 74LS151	10-11
SN 74LS153	10-11

Device Type	Page
SN 74LS155	10-11
SN 74LS156	10-11
SN 74LS157	10-11
SN 74LS158	10-11
SN 74LS160A	10-11
SN 74LS161A	10-11
SN 74LS163	10-11
SN 74LS164	10-10
SN 74LS165	10-10
SN 74LS166	10-10
SN 74LS168	10-11
SN 74LS169	10-11
SN 74LS170	10-10
SN 74LS173	10-10
SN 74LS174	10-10
SN 74LS175	10-10
SN 74LS190	10-11
SN 74LS191	10-11
SN 74LS192	10-11
SN 74LS193	10-11
SN 74LS194A	10-10
SN 74LS195A	10-10
SN 74LS197	10-11
SN 74LS20	10-9
SN 74LS21	10-9
SN 74LS257A	10-11
SN 74LS258A	10-11
SN 74LS259	10-10
SN 74LS26	10-9
SN 74LS260	10-9
SN 74LS266	10-10
SN 74LS27	10-9
SN 74LS279	10-10
SN 74LS28	10-9
SN 74LS290	10-11
SN 74LS293	10-11
SN 74LS295A	10-10
SN 74LS299	10-10
SN 74LS299	10-10
SN 74LS32	10-9
SN 74LS322	10-10
SN 74LS323	10-10
SN 74LS33	10-9
SN 74LS352	10-11
SN 74LS353	10-11
SN 74LS365A	10-9
SN 74LS366A	10-9
SN 74LS368A	10-9
SN 74LS37	10-9
SN 74LS373	10-10
SN 74LS375	10-10
SN 74LS377	10-10
SN 74LS378	10-10
SN 74LS379	10-10
SN 74LS38	10-9
SN 74LS386	10-9
SN 74LS390	10-11
SN 74LS395	10-10
SN 74LS398	10-10
SN 74LS398	10-11
SN 74LS399	10-11
SN 74LS40	10-9
SN 74LS42	10-11
SN 74LS490	10-11
SN 74LS51	10-10
SN 74LS54	10-10
SN 74LS55	10-10
SN 74LS568	10-11
SN 74LS569	10-11
SN 74LS604	10-11
SN 74LS605	10-11
SN 74LS606	10-11
SN 74LS607	10-11
SN 74LS621	10-13

Device Type	Page
SN 74LS622	10-13
SN 74LS641	10-13
SN 74LS642	10-13
SN 74LS644	10-13
SN 74LS668	10-11
SN 74LS669	10-11
SN 74LS670	10-10
SN 74LS673	10-10
SN 74LS674	10-10
SN 74LS716	10-11
SN 74LS718	10-11
SN 74LS73A	10-10
SN 74LS75	10-10
SN 74LS76A	10-10
SN 74LS77	10-10
SN 74LS78A	10-10
SN 74LS86	10-9
SN 74LS90	10-11
SN 74LS91	10-10
SN 74LS92	10-11
SN 74LS93	10-11
SN 74LS95B	10-10
SN 75 4LS253	10-11
SN 75 4LS162	10-11
SN 75 4LS783	10-11
SN 75LS367A	10-9
SNALS02	10-14
SNALS4 32	10-14
SN54ALS00	10-14
SN54ALS08	10-14
SN54ALS109	10-14
SN54ALS160	10-14
SN54ALS161	10-14
SN54ALS162	10-14
SN54ALS163	10-14
SN54ALS273	10-14
SN54ALS373	10-14
SN54ALS374	10-14
SN54ALS377	10-14
SN54ALS573	10-14
SN54ALS574	10-14
SN54ALS576	10-14
SN54ALS580	10-14
SN54ALS690	10-14
SN54ALS692	10-14
SN54ALS693	10-14
SN54ALS696	10-14
SN54ALS697	10-14
SN54ALS698	10-14
SN54ALS699	10-14
SN54ALS74	10-14
SN54ALS873	10-14
SN54ALS874	10-14
SN54ALS876	10-14
SN54ALS880	10-14
SN54LS122	10-12
SN54LS122	10-12
SN54LS123	10-12
SN54LS125A	10-12
SN54LS126A	10-12
SN54LS147	10-12
SN54LS148	10-12
SN54LS160	10-8
SN54LS161	10-8
SN54LS162	10-8
SN54LS181	10-12
SN54LS181	10-12
SN54LS182	10-12
SN54LS183	10-12
SN54LS183	10-12
SN54LS190	10-8
SN54LS191	10-8
SN54LS192	10-8
SN54LS192	10-8

Device Type	Page
SN54LS193	10-8
SN54LS196	10-8
SN54LS197	10-8
SN54LS221	10-12
SN54LS240	10-12
SN54LS241	10-12
SN54LS242	10-12
SN54LS243	10-12
SN54LS244	10-12
SN54LS245	10-12
SN54LS247	10-12
SN54LS248	10-12
SN54LS249	10-12
SN54LS348	10-12
SN54LS365A	10-12
SN54LS366A	10-12
SN54LS367A	10-12
SN54LS368	10-12
SN54LS373	10-10
SN54LS385	10-12
SN54LS47	10-12
SN54LS48	10-12
SN54LS49	10-12
SN54LS540	10-12
SN54LS541	10-12
SN54LS620	10-12
SN54LS623	10-12
SN54LS640	10-12
SN54LS643	10-12
SN54LS645	10-12
SN54LS682	10-12
SN54LS683	10-12
SN54LS684	10-12
SN54LS685	10-12
SN54LS686	10-12
SN54LS687	10-12
SN54LS688	10-12
SN54LS74	10-7
SN54LS795	10-12
SN54LS796	10-12
SN54LS797	10-12
SN54LS798	10-12
SN54LS83A	10-12
SN54LS85	10-12
SN54LS90	10-8
SN54LS93	10-8
SN74LS125A	10-12
SN74ALS00	10-14
SN74ALS02	10-14
SN74ALS08	10-14
SN74ALS160	10-14
SN74ALS161	10-14
SN74ALS162	10-14
SN74ALS163	10-14
SN74ALS273	10-14
SN74ALS32	10-14
SN74ALS373	10-14
SN74ALS377	10-14
SN74ALS573	10-14
SN74ALS574	10-14
SN74ALS576	10-14
SN74ALS580	10-14
SN74ALS690	10-14
SN74ALS691	10-14
SN74ALS692	10-14
SN74ALS693	10-14
SN74ALS696	10-14
SN74ALS697	10-14
SN74ALS698	10-14
SN74ALS699	10-14
SN74ALS74	10-14
SN74ALS873	10-14
SN74ALS874	10-14
SN74ALS876	10-14

Device Type	Page
SN74ALS880	10-14
SN74LS1 24	10-12
SN74LS1 240	10-12
SN74LS122	10-12
SN74LS123	10-12
SN74LS126A	10-12
SN74LS147	10-12
SN74LS148	10-12
SN74LS160	10-8
SN74LS161	10-8
SN74LS162	10-8
SN74LS163	10-8
SN74LS181	10-12
SN74LS182	10-12
SN74LS183	10-12
SN74LS191	10-8
SN74LS192	10-8
SN74LS193	10-8
SN74LS196	10-8
SN74LS197	10-8
SN74LS221	10-12
SN74LS241	10-12
SN74LS243	10-12
SN74LS244	10-12
SN74LS245	10-12
SN74LS247	10-12
SN74LS248	10-12
SN74LS249	10-12
SN74LS280	10-12
SN74LS283	10-12
SN74LS348	10-12
SN74LS365A	10-12
SN74LS366A	10-12
SN74LS385	10-12
SN74LS47	10-12
SN74LS48	10-12
SN74LS49	10-12
SN74LS540	10-12
SN74LS541	10-12
SN74LS620	10-12
SN74LS623	10-12
SN74LS640	10-12
SN74LS643	10-12
SN74LS645	10-12
SN74LS795	10-12
SN74LS796	10-12
SN74LS797	10-12
SN74LS798	10-12
SN74LS8 90	10-8
SN74LS83A	10-12
SN74LS93	10-8
SN75172	7-17
SN75173	7-17
SN75175	7-17
SN75176	7-17
SN75177	7-17
SN75178	7-17
S2800 SERIES	16-3
TBA120C	12-3
TBA2110	12-3
TBA395	12-2
TBA396	12-2
TBA920	12-2
TCA3002	6-5
TCA3003	6-5
TCA3381/2/3	11-12
TCA4500A	12-4
TCA5500	12-5
TCA5550	12-3
TDA1080	13-3
TDA1085C	13-2
TDA1190P	12-2
TDA1190P	12-3
TDA1285	13-3

Device Type	Page
TDA2002	12-5
TDA3030	12-2
TDA3030	122-2
TDA3190P	12-3
TDA3190P	12-2
TDA3300	12-2
TDA3950A	12-2
TDA4600	6-12
TIL100SERIES	22-2
TIP2955	15-23
TIP3055	15-23
TIP47	15-23
TIP48	15-23
TIP49	15-23
TIP50	15-23
TL431	6-9
TL494	6-12
TL495	6-12
TMS27A16C	4-3
TMS2716C	4-3
TP2300 SERIES	16-13
TRA1110	17-3
TRA1120	17-3
TRA1140	17-3
TRA2500	17-3
TRA2501	17-3
TRA2506	17-3
TRA2508	17-3
TRA2510	17-3
T2500 SERIES	16-14
T2800 SERIES	16-15
T4100M	16-17
T4101E/M	16-16
T4110M	16-17
T4120 SERIES	16-17
T4121 SERIES	16-16
UAA1004	13-1
UAA1008A	12-3
UAA1016	13-1
UAA2000A	12-3
UAA2001	12-3
UAA2002	12-4
UAA2003	12-4
UAA2010	12-3
UAA2022	12-3
UA758A	12-4
ULN2068	7-19
ULN2074	7-19
ULN2803	7-20
U308	19-26
U309	19-26
U310	19-26
V BY606	17-2
1M000SERIES	18-5
1N TRA1102	17-3
1N1N1188	17-3
1N1183	17-3
1N1184	17-3
1N1186	17-3
1N1190A	17-3
1N2800SERIES	18-3
1N3000SERIES	18-3
1N3300SERIES	18-3
1N3491	17-3
1N3492	17-3
1N3493	17-3
1N3495	17-3
1N3656	17-3
1N3660	17-3
1N3661	17-3
1N3663	17-3
1N3700SERIES	18-3
1N3800SERIES	18-3
1N3800SERIES	17-8

Device Type	Page
1N3900SERIES	17-8
1N3900SERIES	18-3
1N3909	17-9
1N3910	17-9
1N3911	17-9
1N3913	17-9
1N4001	17-2
1N4002	17-2
1N4003	17-2
1N4004	17-2
1N4005	17-2
1N4006	17-2
1N4007	17-2
1N4100SERIES	18-2
1N4500SERIES	18-3
1N4600SERIES	18-2
1N4700SERIES	18-2
1N4700SERIES	18-3
1N4719	17-2
1N4720	17-2
1N4721	17-2
1N4722	17-2
1N4723	17-2
1N4724	17-2
1N4725	17-2
1N4900SERIES	17-7
1N5100SERIES	21-2
1N5200SERIES	18-2
1N5300SERIES	18-3
1N5391	17-2
1N5392	17-2
1N5393	17-2
1N5395	17-2
1N5397	17-2
1N5398	17-2
1N5399	17-2
1N5400	17-2
1N5400SERIES	21-2
1N5401	17-2
1N5402	17-2
1N5404	17-2
1N5407	17-2
1N5408	17-2
1N5408	17-2
1N5500SERIES	18-2
1N5758	16-21
1N5800SERIES	17-15
1N5800SERIES	17-14
1N5900SERIES	18-2
1N6000SERIES	18-2
1N6095	17-14
1N6096	17-14
1N6097	17-15
1N6098	17-15
1N6125	15-25
1N6200SERIES	18-8
1N648 90	15-26
1N700SERIES	18-2
1N900SERIES	18-2
11 N1186	17-3
12FR10	17-5
12F10	17-5
12F100	17-5
12F20	17-5
12F40	17-5
12G60	17-5
123F80	17-5
2N 708	19-5
2N1500SERIES	16-2
2N1613	19-6
2NI711	19-6
2N1893	19-6
2N2060	19-24
2N2218	19-4

Device Type	Page
2N2218	19-6
2N2219	19-6
2N2222	19-3
2N2222	10-3
2N2223	19-1
2N2300SERIES	16-2
2N2368	19-4
2N2453	19-24
2N2469	19-4
2N2483	19-3
2N2484	19-3
2N2570SERIES	16-6
2N2642	19-24
2N2646/7	16-20
2N2652	19-24
2N2857	20-I2
2N2894	19-4
2N2903	19-24
2N2904/5	19-6
2N2906	19-3
2N2907	19-3
2N2920	19-24
2N3012	19-4
2N3019	19-6
2N3045	19-24
2N3053	19-6
2N3054	15-23
2N3055	15-23
2N3055A	15-23
2N3227	19-4
2N3439	19-8
2N3440	19-8
2N3441	15-23
2N3442	15-23
2N3546	19-4
2N3553	20-8
2N3583	15-23
2N3584	15-23
2N3585	15-23
2N3600SERIES	16-4
2N3634/5/6/7	19-8
2N3715	15-23
2N3716	15-23
2N3725	19-6
2N3726	19-24
2N3740	15-23
2N3741	15-23
2N3743	19-8
2N3766	15-23
2N3807	19-24
2N3810	19-24
2N3811	19-24
2N3817	19-24
2N3839	20-12
2N3866	20-12
2N3866	20-9
2N3866	20-8
2N3880	16-20
2N3896/7/8/9	16-7
2N3903/4	19-15
2N3905	19-15
2N3948	20-6
2N3959	20-13
2N3960	20-13
2N3993	19-25
2N3994	19-25
2N4013	19-4
2N4014	19-4
2N4016	19-24
2N4033	19-8
2N4091/2/3	19-26
2N4100SERIES	16-3
2N4200/1/2/3/4	16-9
2N4220/1/2	19-26

Device Type	Page
2N4235/6/7	19-8
2N4260	19-4
2N4261	19-4
2N4391/2/3	19-26
2N4400	19-15
2N4402	19-15
2N4404/5/6/7	19-8
2N4416	19-26
2N4427	20-4
2N4440SERIES	16-3
2N4851/2/3	16-20
2N4854	19-24
2N4870/1	16-20
2N4890	19-8
2N4937	19-24
2N4948/9	16-20
2N4957	20-14
2N4958	20-14
2N4959	20-14
2N5000SERIES	16-2
2N5031	20-14
2N5032	20-14
2N5070	20-8
2N5100SERIES	16-5
2N5108	20-12
2N5109	20-14
2N5109	20-13
2N5146	19-23
2N5160	20-9
2N5179	20-12
2N5179	20-13
2N5265/6/7/8/9	19-25
2N5270/1/2/3/4/5/6	9-2
2N5400	19-14
2N5415/6	19-8
2N5431	16-20
2N5440SERIES	16-19
2N5460/1/2/3/4/5	19-25
2N5484/5/6	19-26
2N5543	20-13
2N5550	19-14
2N5551	19-14
2N5560 SERIES	16-16
2N5570SERIES	16-17
2N5589	20-4
2N5590	20-4
2N5591	20-4
2N5641	20-8
2N5642	20-8
2N5643	20-8
2N5644	20-6
2N5680/1/2	19-8
2N5684	15-25
2N5685	15-25
2N5686	15-85
2N5745	15-25
2N5777	22-6
2N5778	22-6
2N5779	22-6
2N5780	22-6
2N5794	19-24
2N5796	19-24
2N5835	20-13
2N5836	20-13
2N5837	20-13
2N5841	20-13
2N5842	20-13
2N5847	20-3
2N5848	20-3
2N5849	20-3
2N5875	15/25
2N5876	15-25
2N5877	15-25
2N5878	15-15
2N5883	15-25

Device Type	Page
2N5884	15-25
2N5885	15-25
2N5886	15-25
2N5886	15-25
2N5943	20-13
2N5943	20-14
2N5943	20-13
2N5944	20-6
2N5945	20-6
2N5946	20-6
2N6027/8	16-20
2N6029	15-25
2N6030	15-25
2N6031	15-25
2N6049	15-25
2N6050	15-25
2N6051	15-25
2N6052	15-25
2N6053	15-25
2N6054	15-25
2N6055	15-25
2N6056	15-25
2N6057	15-25
2N6058	15-25
2N6059	15-25
2N6060 SERIES	16-14
2N6070SERIES	16-14
2N6080	20-4
2N6081	20-4
2N6082	20-4
2N6083	20-4
2N6084	20-4
2N6100SERIES	16-5
2N6107	15-25
2N6109	15-25
2N6116/7/8	16-20
2N6121	15-25
2N6122	15-25
2N6123	15-25
2N6124	15-25
2N6126	15-25
2N6140SERIES	16-7
2N6140SERIES	16-17
2N6160SERIES	16-19
2N6171/2/3/4	16-7
2N6200SERIES	16-3
2N6212	15-25
2N6213	15-25
2N6229	15-25
2N6230	15-25
2N6231	15-25
2N6233	15-25
2N6234	15-25
2N6235	15-25
2N6249	15-25
2N6250	15-25
2N6251	15-25
2N6255	20-4
2N6256	20-6
2N6274	15-25
2N6275	15-25
2N6276	15-25
2N6277	15-25
2N6283	15-25
2N6283	15-25
2N6284	15-25
2N6285	15-26
2N6286	15-26
2N6287	15-26
2N6290	15-26
2N6294	15-26
2N6298	15-26
2N6299	15-26
2N6300	15-25

Device Type	Page
2N6301	15-26
2N6304	20-13
2N6305	20-13
2N6306	15-26
2N6308	15-26
2N6315	15-26
2N6316	15-26
2N6317	15-26
2N6318	15-26
2N6338	15-26
2N6339	15-26
2N6340	15-26
2N6340SERIES	16-15
2N6340SERIES	16-16
2N6341	15-26
2N6367	20-2
2N6370	20-8
2N6420	15-26
2N6421	15-26
2N6422	15-26
2N6439	20-9
2N6486	15-26
2N6487	15-26
2N6488	15-26
2N6489	15-26
2N6489	15-26
2N6491	15-26
2N6497	15-26
2N6498	15-26
2N6499	15-26
2N6500 SERIES	16-6
2N6502	19-24
2N6517	19-14
2N6520	19-14
2N6542	15-26
2N6543	15-26
2N6545	15-26
2N6546	15-26
2N6547	15-26
2N6576	15-26
2N6577	15-26
2N6578	15-26
2N680 SERIES	16-6
2N690 SERIES	16-6
2N708	19-4
2N918	19-4
22R2U	17-6
24R2U	17-6
26R2U	17-6
28R2U	17-6
3N128	19-27
3N155/6/7/8	19-27
3N169	19-27
3N170	19-27
3N201/2/3	19-27
3N211/2/3	19-27
30R2U	17-6
32R2RU	17-6
32R2U	17-6
34R2U	17-6
35R2U	17-6
38R2U	17-6
4N25/6	22-2
4N30/1	22-2
4N32/33	22-2
4N35/6/7	22-2
4N38	22-2
40HFR10	17-6
40HF05	17-3
40HF10	17-3
40HF10	17-6
40HF100	17-3
40HF100	17-6
40HF20	17-3

Device Type	Page
40HF40	17-3
40HF40	17-6
40HF60	17-3
40HF60	17-6
40HF80	17-3
40HF80	17-6
40HF80	17-6
40HR20	17-6
42R2	17-5
42R2R	17-5
44R2	17-5
46R2	17-5
48R2	17-5
6FR10	17-4
6F10	17-4
6F100	17-4
6F20	17-4
6F40	17-4
6F60	17-4
6F60	17-4
6F80	17-4
6252	17-4
64R2	17-4
66R2	17-4
68R2	17-4
70HFR10	17-6
70HF05	17-3
70HF10	17-6
70HF10	17-3
70HF100	17-6
70HF100	17-3
70HF20	17-6
70HF20	17-3
70HF40	17-6
70HF40	17-3
70HF60	17-3
70HF60	17-6
70HF80	17-3
70HF80	17-6