HM51W17805B Series

2,097,152-word × 8-bit Dynamic Random Access Memory

HITACHI

ADE-203-462B (Z)
Rev. 2.0
May. 30, 1996

Description

The Hitachi HM51W17805B is a CMOS dynamic RAM organized 2,097,152-word × 8-bit. It employs the most advanced CMOS technology for high performance and low power. The HM51W17805B offers Extended Data Out (EDO) Page Mode as a high speed access mode. Multiplexed address input permits the HM51W17805B to be packaged in standard 28-pin plastic SOJ and 28-pin TSOP.

Features

- Single 3.3 V (±0.3 V)
- High speed
  — Access time: 60 ns/70 ns/80 ns (max)
- Low power dissipation
  — Active mode: 432mW/396 mW/360 mW(max)
  — Standby mode : 7.2 mW (max)
  : 0.54 mW (max) (L-version)
- EDO page mode capability
- Long refresh period
  — 2048 refresh cycles : 32 ms
  : 128 ms (L-version)
- 4 variations of refresh
  — $\overline{RAS}$-only refresh
  — $\overline{CAS}$-before-$\overline{RAS}$ refresh
  — Hidden refresh
  — Self refresh (L-version)
- Battery backup operation (L-version)

This specification is fully compatible with the 16-Mbit DRAM specifications from TEXAS INSTRUMENTS.

Hitachi semiconductor

Ordering Information

Type No.	Access time	Package
HM51W17805BJ-6	60 ns	400-mil 28-pin plastic SOJ (CP-28DA)
HM51W17805BJ-7	70 ns	
HM51W17805BJ-8	80 ns	
HM51W17805BLJ-6	60 ns	
HM51W17805BLJ-7	70 ns	
HM51W17805BLJ-8	80 ns	
HM51W17805BS-6*[1]	60 ns	300-mil 28-pin plastic SOJ (CP-28DNA)
HM51W17805BS-7*[1]	70 ns	
HM51W17805BS-8*[1]	80 ns	
HM51W17805BLS-6*[1]	60 ns	
HM51W17805BLS-7*[1]	70 ns	
HM51W17805BLS-8*[1]	80 ns	
HM51W17805BTT-6	60 ns	400-mil 28-pin plastic TSOP II (TTP-28DA)
HM51W17805BTT-7	70 ns	
HM51W17805BTT-8	80 ns	
HM51W17805BLTT-6	60 ns	
HM51W17805BLTT-7	70 ns	
HM51W17805BLTT-8	80 ns	
HM51W17805BTS-6*[1]	60 ns	300-mil 28-pin plastic TSOP II (TTP-28DB)
HM51W17805BTS-7*[1]	70 ns	
HM51W17805BTS-8*[1]	80 ns	
HM51W17805BLTS-6*[1]	60 ns	
HM51W17805BLTS-7*[1]	70 ns	
HM51W17805BLTS-8*[1]	80 ns	

Note: 1. Under development

Pin Arrangement

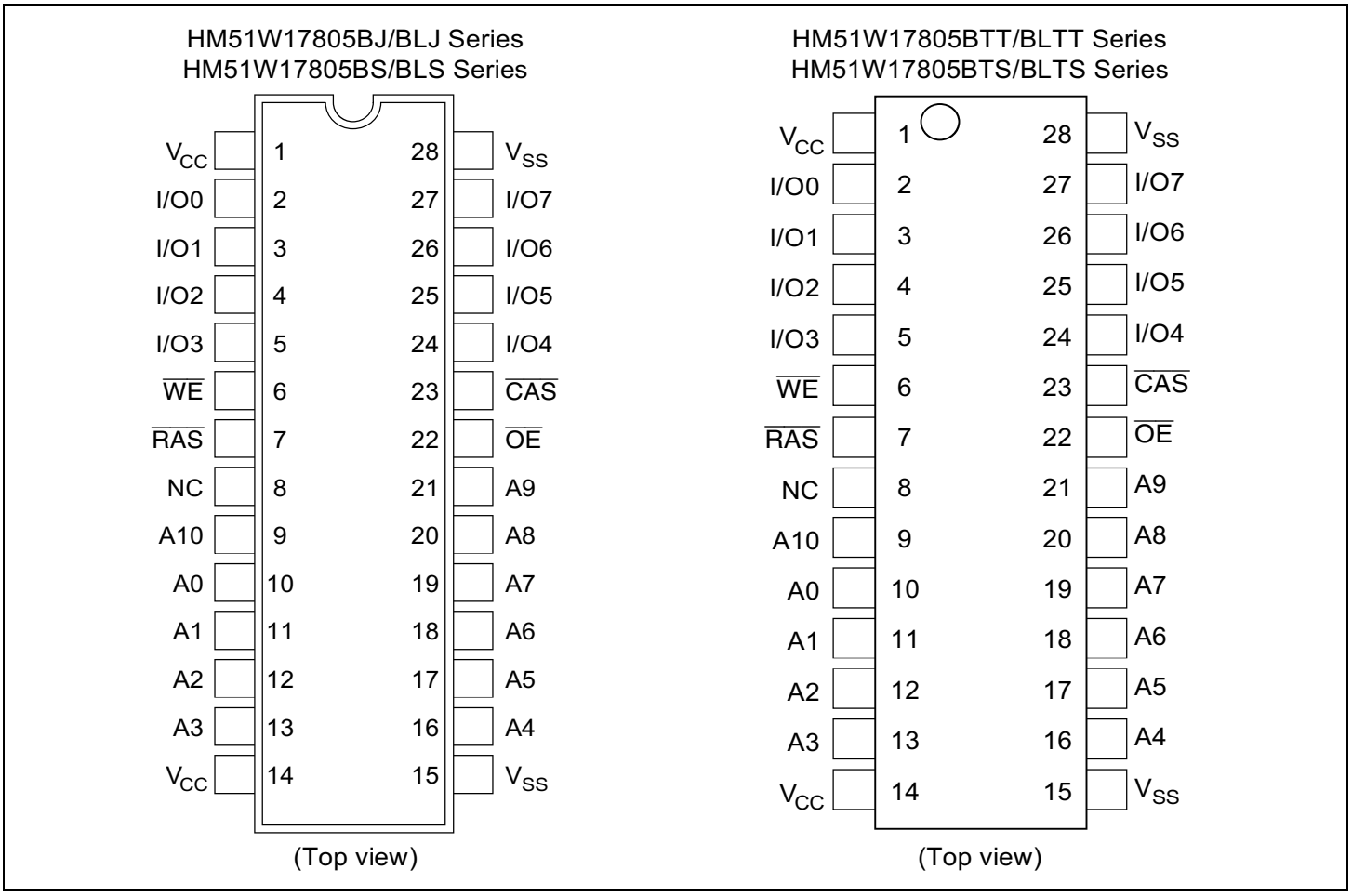

Pin Description

Pin name	Function
A0 to A10	Address input — Row/Refresh address A0 to A10 — Column address A0 to A9
I/O0 to I/O7	Data input/data output
$\overline{RAS}$	Row address strobe
$\overline{CAS}$	Column address strobe
$\overline{WE}$	Read/Write enable
$\overline{OE}$	Output enable
V_{CC}	Power supply
V_{SS}	Ground
NC	No connection

Block Diagram

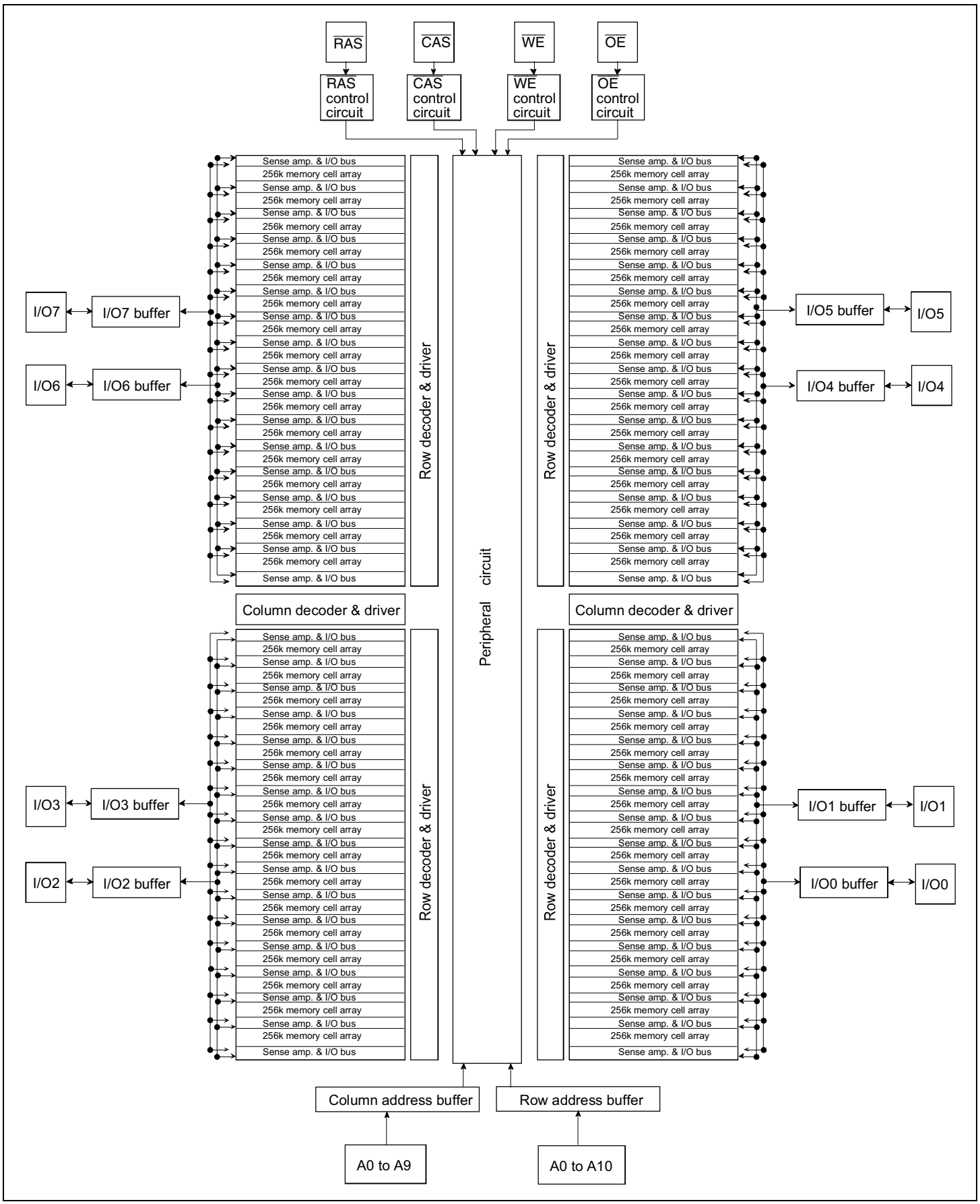

Absolute Maximum Ratings

Parameter	Symbol	Value	Unit
Voltage on any pin relative to V_{SS}	V_T	–0.5 to V_{CC} + 0.5 (≤ 4.6 V (max))	V
Supply voltage relative to V_{SS}	V_{CC}	–0.5 to +4.6	V
Short circuit output current	Iout	50	mA
Power dissipation	P_T	1.0	W
Operating temperature	Topr	0 to +70	°C
Storage temperature	Tstg	–55 to +125	°C

Recommended DC Operating Conditions (Ta = 0 to +70°C)

Parameter	Symbol	Min	Typ	Max	Unit	Note
Supply voltage	V_{CC}	3.0	3.3	3.6	V	1
Input high voltage	V_{IH}	2.0	—	V_{CC} + 0.3	V	1
Input low voltage	V_{IL}	–0.3	—	0.8	V	1

Note: 1. All voltage referred to V_{SS}.

DC Characteristics (Ta = 0 to +70°C, V_{CC} = 3.3 V ± 0.3 V, V_{SS} = 0 V)

		HM51W17805B							
		-6		-7		-8			
Parameter	**Symbol**	**Min**	**Max**	**Min**	**Max**	**Min**	**Max**	**Unit**	**Test conditions**
Operating current[*1, *2]	I_{CC1}	—	120	—	110	—	100	mA	t_{RC} = min
Standby current	I_{CC2}	—	2	—	2	—	2	mA	TTL interface $\overline{RAS}$, $\overline{CAS}$ = V_{IH} Dout = High-Z
		—	1	—	1	—	1	mA	CMOS interface $\overline{RAS}$, $\overline{CAS}$ ≥ V_{CC} – 0.2V Dout = High-Z
Standby current (L-version)	I_{CC2}	—	150	—	150	—	150	µA	CMOS interface $\overline{RAS}$, $\overline{CAS}$ ≥ V_{CC} – 0.2V Dout = High-Z
$\overline{RAS}$-only refresh current[*2]	I_{CC3}	—	120	—	110	—	100	mA	t_{RC} = min
Standby current[*1]	I_{CC5}	—	5	—	5	—	5	mA	$\overline{RAS}$ = V_{IH} $\overline{CAS}$ = V_{IL} Dout = enable
$\overline{CAS}$-before-$\overline{RAS}$ refresh current	I_{CC6}	—	120	—	110	—	100	mA	t_{RC} = min
EDO page mode current[*1, *3]	I_{CC7}	—	120	—	110	—	100	mA	t_{HPC} = min
Battery backup current[*4] (Standby with CBR refresh) (L-version)	I_{CC10}	—	400	—	400	—	400	µA	CMOS interface Dout = High-Z CBR refresh: t_{RC} = 62.5 µs t_{RAS} ≤ 0.3 µs
Self refresh mode current (L-version)	I_{CC11}	—	250	—	250	—	250	µA	CMOS interface $\overline{RAS}$, $\overline{CAS}$ ≤ 0.2V Dout = High-Z
Input leakage current	I_{LI}	–10	10	–10	10	–10	10	µA	0 V ≤ Vin ≤ 4.6 V
Output leakage current	I_{LO}	–10	10	–10	10	–10	10	µA	0 V ≤ Vout ≤ 4.6 V Dout = disable
Output high voltage	V_{OH}	2.4	V_{CC}	2.4	V_{CC}	2.4	V_{CC}	V	High Iout = –2 mA
Output low voltage	V_{OL}	0	0.4	0	0.4	0	0.4	V	Low Iout = 2 mA

Notes:
1. I_{CC} depends on output load condition when the device is selected. I_{CC} max is specified at the output open condition.
2. Address can be changed once or less while $\overline{RAS}$ = V_{IL}.
3. Address can be changed once or less while $\overline{CAS}$ = V_{IH}.
4. $\overline{CAS}$ = L (≤ 0.2 V) while $\overline{RAS}$ = L (≤ 0.2 V).

Capacitance (Ta = 25°C, V_{CC} = 3.3 V ± 0.3 V)

Parameter	Symbol	Typ	Max	Unit	Notes
Input capacitance (Address)	C_{I1}	—	5	pF	1
Input capacitance (Clocks)	C_{I2}	—	7	pF	1
Output capacitance (Data-in, Data-out)	$C_{I/O}$	—	7	pF	1, 2

Notes: 1. Capacitance measured with Boonton Meter or effective capacitance measuring method.
2. $\overline{CAS}$ = V_{IH} to disable Dout.

AC Characteristics (Ta = 0 to +70°C, V_{CC} = 3.3 V ± 0.3 V, V_{SS} = 0 V)*1, *2, *18

Test Conditions

- Input rise and fall time: 2 ns
- Input levels: V_{IL} = 0 V, V_{IH} = 3 V
- Input timing reference levels: 0.8 V, 2.0 V
- Output timing reference levels: 0.8 V, 2.0 V
- Output load: 1 TTL gate + C_L (100 pF) (Including scope and jig)

Read, Write, Read-Modify-Write and Refresh Cycles (Common parameters)

		HM51W17805B							
		-6		-7		-8			
Parameter	**Symbol**	**Min**	**Max**	**Min**	**Max**	**Min**	**Max**	**Unit**	**Notes**
Random read or write cycle time	t_{RC}	104	—	124	—	144	—	ns	
$\overline{RAS}$ precharge time	t_{RP}	40	—	50	—	60	—	ns	
$\overline{CAS}$ precharge time	t_{CP}	10	—	13	—	15	—	ns	
$\overline{RAS}$ pulse width	t_{RAS}	60	10000	70	10000	80	10000	ns	
$\overline{CAS}$ pulse width	t_{CAS}	10	10000	13	10000	15	10000	ns	
Row address setup time	t_{ASR}	0	—	0	—	0	—	ns	
Row address hold time	t_{RAH}	10	—	10	—	10	—	ns	
Column address setup time	t_{ASC}	0	—	0	—	0	—	ns	
Column address hold time	t_{CAH}	10	—	13	—	15	—	ns	
$\overline{RAS}$ to $\overline{CAS}$ delay time	t_{RCD}	20	45	20	52	20	60	ns	3
$\overline{RAS}$ to column address delay time	t_{RAD}	15	30	15	35	15	40	ns	4
$\overline{RAS}$ hold time	t_{RSH}	15	—	18	—	20	—	ns	
$\overline{CAS}$ hold time	t_{CSH}	48	—	58	—	68	—	ns	
$\overline{CAS}$ to $\overline{RAS}$ precharge time	t_{CRP}	5	—	5	—	5	—	ns	
$\overline{OE}$ to Din delay time	t_{OED}	15	—	18	—	20	—	ns	5
$\overline{OE}$ delay time from Din	t_{DZO}	0	—	0	—	0	—	ns	6
$\overline{CAS}$ delay time from Din	t_{DZC}	0	—	0	—	0	—	ns	6
Transition time (rise and fall)	t_T	2	50	2	50	2	50	ns	7

Read Cycle

		HM51W17805B							
		-6		-7		-8			
Parameter	**Symbol**	**Min**	**Max**	**Min**	**Max**	**Min**	**Max**	**Unit**	**Notes**
Access time from $\overline{RAS}$	t_{RAC}	—	60	—	70	—	80	ns	8, 9
Access time from $\overline{CAS}$	t_{CAC}	—	15	—	18	—	20	ns	9, 10, 17
Access time from address	t_{AA}	—	30	—	35	—	40	ns	9, 11, 17
Access time from $\overline{OE}$	t_{OEA}	—	15	—	18	—	20	ns	9
Read command setup time	t_{RCS}	0	—	0	—	0	—	ns	
Read command hold time to $\overline{CAS}$	t_{RCH}	0	—	0	—	0	—	ns	12
Read command hold time from $\overline{RAS}$	t_{RCHR}	60	—	70	—	80	—	ns	
Read command hold time to $\overline{RAS}$	t_{RRH}	0	—	0	—	0	—	ns	12
Column address to $\overline{RAS}$ lead time	t_{RAL}	30	—	35	—	40	—	ns	
Column address to $\overline{CAS}$ lead time	t_{CAL}	18	—	23	—	28	—	ns	
$\overline{CAS}$ to output in low-Z	t_{CLZ}	0	—	0	—	0	—	ns	
Output data hold time	t_{OH}	3	—	3	—	3	—	ns	20
Output data hold time from $\overline{OE}$	t_{OHO}	3	—	3	—	3	—	ns	
Output buffer turn-off time	t_{OFF}	—	15	—	15	—	15	ns	13, 20
Output buffer turn-off to $\overline{OE}$	t_{OEZ}	—	15	—	15	—	15	ns	13
$\overline{CAS}$ to Din delay time	t_{CDD}	15	—	18	—	20	—	ns	5
Output data hold time from $\overline{RAS}$	t_{OHR}	3	—	3	—	3	—	ns	20
Output buffer turn-off to $\overline{RAS}$	t_{OFR}	—	15	—	15	—	15	ns	20
Output buffer turn-off to $\overline{WE}$	t_{WEZ}	—	15	—	15	—	15	ns	
$\overline{WE}$ to Din delay time	t_{WED}	15	—	18	—	20	—	ns	
$\overline{RAS}$ to Din delay time	t_{RDD}	15	—	18	—	20	—	ns	

Write Cycle

		HM51W17805B							
		-6		-7		-8			
Parameter	**Symbol**	**Min**	**Max**	**Min**	**Max**	**Min**	**Max**	**Unit**	**Notes**
Write command setup time	t_{WCS}	0	—	0	—	0	—	ns	14
Write command hold time	t_{WCH}	10	—	13	—	15	—	ns	
Write command pulse width	t_{WP}	10	—	10	—	10	—	ns	
Write command to $\overline{RAS}$ lead time	t_{RWL}	10	—	13	—	15	—	ns	
Write command to $\overline{CAS}$ lead time	t_{CWL}	10	—	13	—	15	—	ns	
Data-in setup time	t_{DS}	0	—	0	—	0	—	ns	15
Data-in hold time	t_{DH}	10	—	13	—	15	—	ns	15

Read-Modify-Write Cycle

		HM51W17805B							
		-6		-7		-8			
Parameter	**Symbol**	**Min**	**Max**	**Min**	**Max**	**Min**	**Max**	**Unit**	**Notes**
Read-modify-write cycle time	t_{RWC}	149	—	175	—	199	—	ns	
$\overline{RAS}$ to $\overline{WE}$ delay time	t_{RWD}	82	—	95	—	107	—	ns	14
$\overline{CAS}$ to $\overline{WE}$ delay time	t_{CWD}	37	—	43	—	47	—	ns	14
Column address to $\overline{WE}$ delay time	t_{AWD}	52	—	60	—	67	—	ns	14
$\overline{OE}$ hold time from $\overline{WE}$	t_{OEH}	15	—	18	—	20	—	ns	

Refresh Cycle

		HM51W17805B							
		-6		-7		-8			
Parameter	**Symbol**	**Min**	**Max**	**Min**	**Max**	**Min**	**Max**	**Unit**	**Notes**
$\overline{CAS}$ setup time (CBR refresh cycle)	t_{CSR}	5	—	5	—	5	—	ns	
$\overline{CAS}$ hold time (CBR refresh cycle)	t_{CHR}	10	—	10	—	10	—	ns	
$\overline{WE}$ setup time (CBR refresh cycle)	t_{WRP}	0	—	0	—	0	—	ns	
$\overline{WE}$ hold time (CBR refresh cycle)	t_{WRH}	10	—	10	—	10	—	ns	
$\overline{RAS}$ precharge to $\overline{CAS}$ hold time	t_{RPC}	0	—	0	—	0	—	ns	

EDO Page Mode Cycle

		HM51W17805B							
		-6		-7		-8			
Parameter	Symbol	Min	Max	Min	Max	Min	Max	Unit	Notes
EDO page mode cycle time	t_{HPC}	25	—	30	—	35	—	ns	19
EDO page mode $\overline{RAS}$ pulse width	t_{RASP}	—	100000	—	100000	—	100000	ns	16
Access time from $\overline{CAS}$ precharge	t_{CPA}	—	35	—	40	—	45	ns	9, 17
$\overline{RAS}$ hold time from $\overline{CAS}$ precharge	t_{CPRH}	35	—	40	—	45	—	ns	
Output data hold time from $\overline{CAS}$ low	t_{DOH}	3	—	3	—	3	—	ns	9, 17
$\overline{CAS}$ hold time referred $\overline{OE}$	t_{COL}	10	—	13	—	15	—	ns	
$\overline{CAS}$ to $\overline{OE}$ setup time	t_{COP}	5	—	5	—	5	—	ns	
Read command hold time from $\overline{CAS}$ precharge	t_{RCHC}	35	—	40	—	45	—	ns	

EDO Page Mode Read-Modify-Write Cycle

		HM51W17805B							
		-6		-7		-8			
Parameter	Symbol	Min	Max	Min	Max	Min	Max	Unit	Notes
EDO page mode read- modify-write cycle time	t_{HPRWC}	79	—	90	—	99	—	ns	
$\overline{WE}$ delay time from $\overline{CAS}$ precharge	t_{CPW}	54	—	62	—	69	—	ns	14

Refresh

Parameter	Symbol	Max	Unit	Note
Refresh period	t_{REF}	32	ms	2048 cycles
Refresh period (L-version)	t_{REF}	128	ms	2048 cycles

Self Refresh Mode (L-version)

		HM51W17805BL							
		-6		-7		-8			
Parameter	**Symbol**	**Min**	**Max**	**Min**	**Max**	**Min**	**Max**	**Unit**	**Notes**
$\overline{RAS}$ pulse width (self refresh)	t_{RASS}	100	—	100	—	100	—	µs	
$\overline{RAS}$ precharge time (self refresh)	t_{RPS}	110	—	130	—	150	—	ns	
$\overline{CAS}$ hold time (self refresh)	t_{CHS}	–50	—	–50	—	–50	—	ns	

Notes:
1. AC measurements assume t_T = 2 ns.
2. An initial pause of 200 µs is required after power up followed by a minimum of eight initialization cycles (any combination of cycles containing $\overline{RAS}$-only refresh or $\overline{CAS}$-before-$\overline{RAS}$ refresh). If the internal refresh counter is used, a minimum of eight $\overline{CAS}$-before-$\overline{RAS}$ refresh cycles are required.
3. Operation with the t_{RCD} (max) limit insures that t_{RAC} (max) can be met, t_{RCD} (max) is specified as a reference point only; if t_{RCD} is greater than the specified t_{RCD} (max) limit, then access time is controlled exclusively by t_{CAC}.
4. Operation with the t_{RAD} (max) limit insures that t_{RAC} (max) can be met, t_{RAD} (max) is specified as a reference point only; if t_{RAD} is greater than the specified t_{RAD} (max) limit, then access time is controlled exclusively by t_{AA}.
5. Either t_{OED} or t_{CDD} must be satisfied.
6. Either t_{DZO} or t_{DZC} must be satisfied.
7. V_{IH} (min) and V_{IL} (max) are reference levels for measuring timing of input signals. Also, transition times are measured between V_{IH} (min) and V_{IL} (max).
8. Assumes that $t_{RCD} \leq t_{RCD}$ (max) and $t_{RAD} \leq t_{RAD}$ (max). If t_{RCD} or t_{RAD} is greater than the maximum recommended value shown in this table, t_{RAC} exceeds the value shown.
9. Measured with a load circuit equivalent to 1 TTL loads and 100 pF.
10. Assumes that $t_{RCD} \geq t_{RCD}$ (max) and $t_{RAD} \leq t_{RAD}$ (max).
11. Assumes that $t_{RCD} \leq t_{RCD}$ (max) and $t_{RAD} \geq t_{RAD}$ (max).
12. Either t_{RCH} or t_{RRH} must be satisfied for a read cycles.
13. t_{OFF} (max) and t_{OEZ} (max) define the time at which the outputs achieve the open circuit condition and are not referred to output voltage levels.
14. t_{WCS}, t_{RWD}, t_{CWD}, t_{AWD} and t_{CPW} are not restrictive operating parameters. They are included in the data sheet as electrical characteristics only; if $t_{WCS} \geq t_{WCS}$ (min), the cycle is an early write cycle and the data out pin will remain open circuit (high impedance) throughout the entire cycle; if $t_{RWD} \geq t_{RWD}$ (min), $t_{CWD} \geq t_{CWD}$ (min), and $t_{AWD} \geq t_{AWD}$ (min), or $t_{CWD} \geq t_{CWD}$ (min), $t_{AWD} \geq t_{AWD}$ (min) and $t_{CPW} \geq t_{CPW}$ (min), the cycle is a read-modify-write and the data output will contain data read from the selected cell; if neither of the above sets of conditions is satisfied, the condition of the data out (at access time) is indeterminate.
15. These parameters are referred to $\overline{CAS}$ leading edge in early write cycles and to $\overline{WE}$ leading edge in delayed write or read-modify-write cycles.
16. t_{RASP} defines $\overline{RAS}$ pulse width in EDO page mode cycles.
17. Access time is determined by the longest among t_{AA}, t_{CAC} and t_{CPA}.
18. In delayed write or read-modify-write cycles, $\overline{OE}$ must disable output buffer prior to applying data to the device.

19. t_{HPC} (min) can be achieved during a series of EDO page mode write cycles or EDO page mode read cycles. If both write and read operation are mixed in a EDO page mode $\overline{RAS}$ cycle (EDO page mode mix cycle (1), (2)), minimum value of $\overline{CAS}$ cycle (t_{CAS} + t_{CP} + 2 t_T) becomes greater than the specified t_{HPC} (min) value.The value of $\overline{CAS}$ cycle time of mixed EDO page mode is shown in EDO page mode mix cycle (1) and (2).
20. Data output turns off and becomes high impedance from later rising edge of $\overline{RAS}$ and $\overline{CAS}$. Hold time and turn off time are specified by the timing specifications of later rising edge of $\overline{RAS}$ and $\overline{CAS}$ between t_{OHR} and t_{OH}, and between t_{OFR} and t_{OFF}.
21. Please do not use t_{RASS} timing, 10 µs ≤ t_{RASS} ≤ 100 µs. During this period, the device is in transition state from normal operation mode to self refresh mode. If t_{RASS} ≥ 100 µs, then $\overline{RAS}$ precharge time should use t_{RPS} instaed of t_{RP}.
22. If you use RAS only refresh or CBR burst refresh mode in normal read/write cycles, 2048 cycles of distributed CBR refresh with 15.6 Ms interval should be executed within 32 ms immediately after exiting from and before entering into the self refresh mode.
23. If you use distributed CBR refresh mode with 15.6 µs interval in normal read/write cycle, CBR refresh should be executed within 15.6 µs immediately after exiting from and before entering into self refresh mode.
24. Repetitive self refresh mode without refreshing all memory is not allowed. Once you exit from self refresh mode, all memory cells need to be refreshed before re-entering the self refresh mode again.
25. XXX: H or L (H: V_{IH} (min) ≤ V_{IN} ≤ V_{IH} (max), L: V_{IL} (min) ≤ V_{IN} ≤ V_{IL} (max))

    ///////: Invalid Dout

    When the address, clock and input pins are not described on timing waveforms, their pins must be applied V_{IH} or V_{IL}.

Timing Waveforms[*25]

Read Cycle

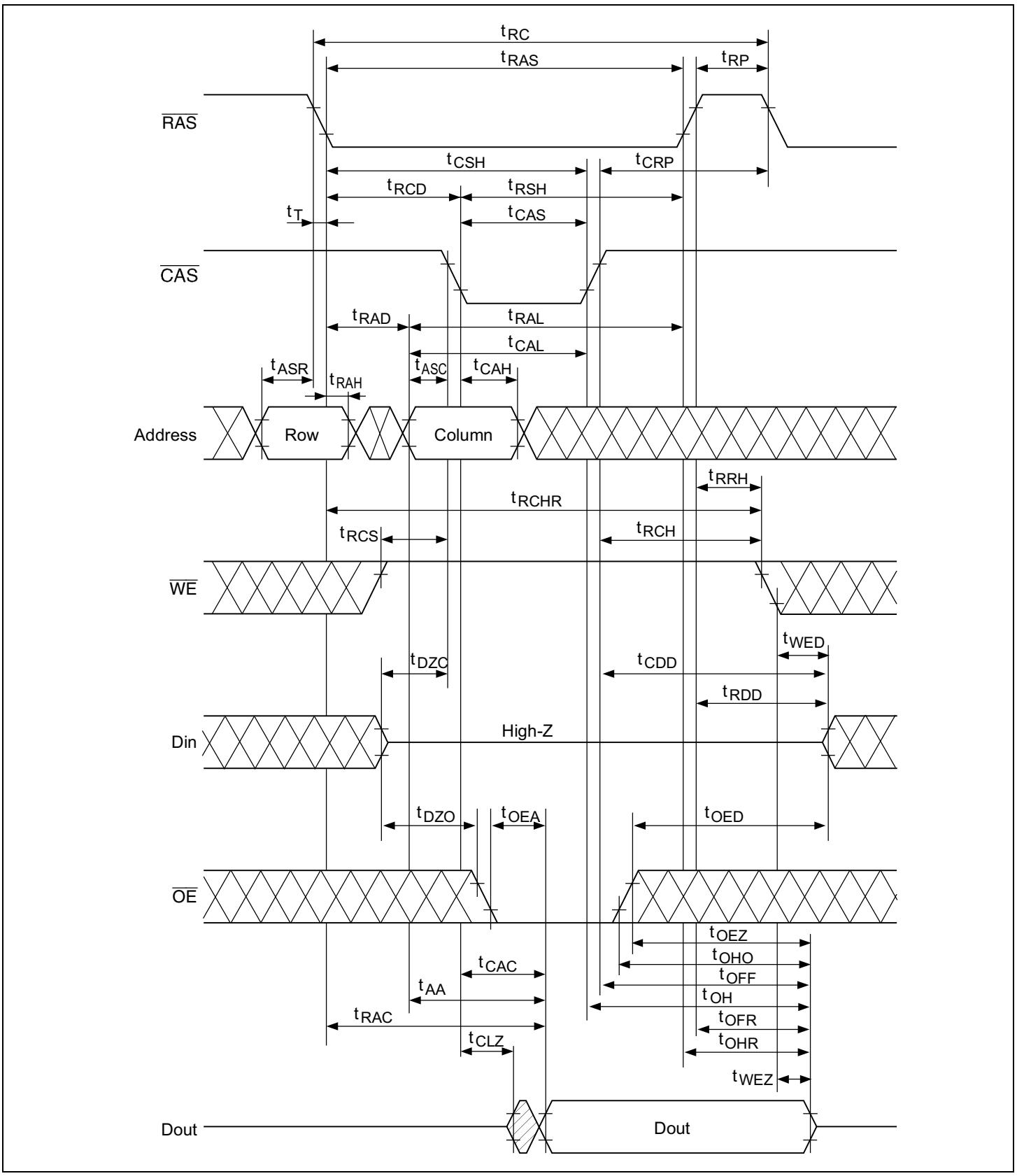

Early Write Cycle

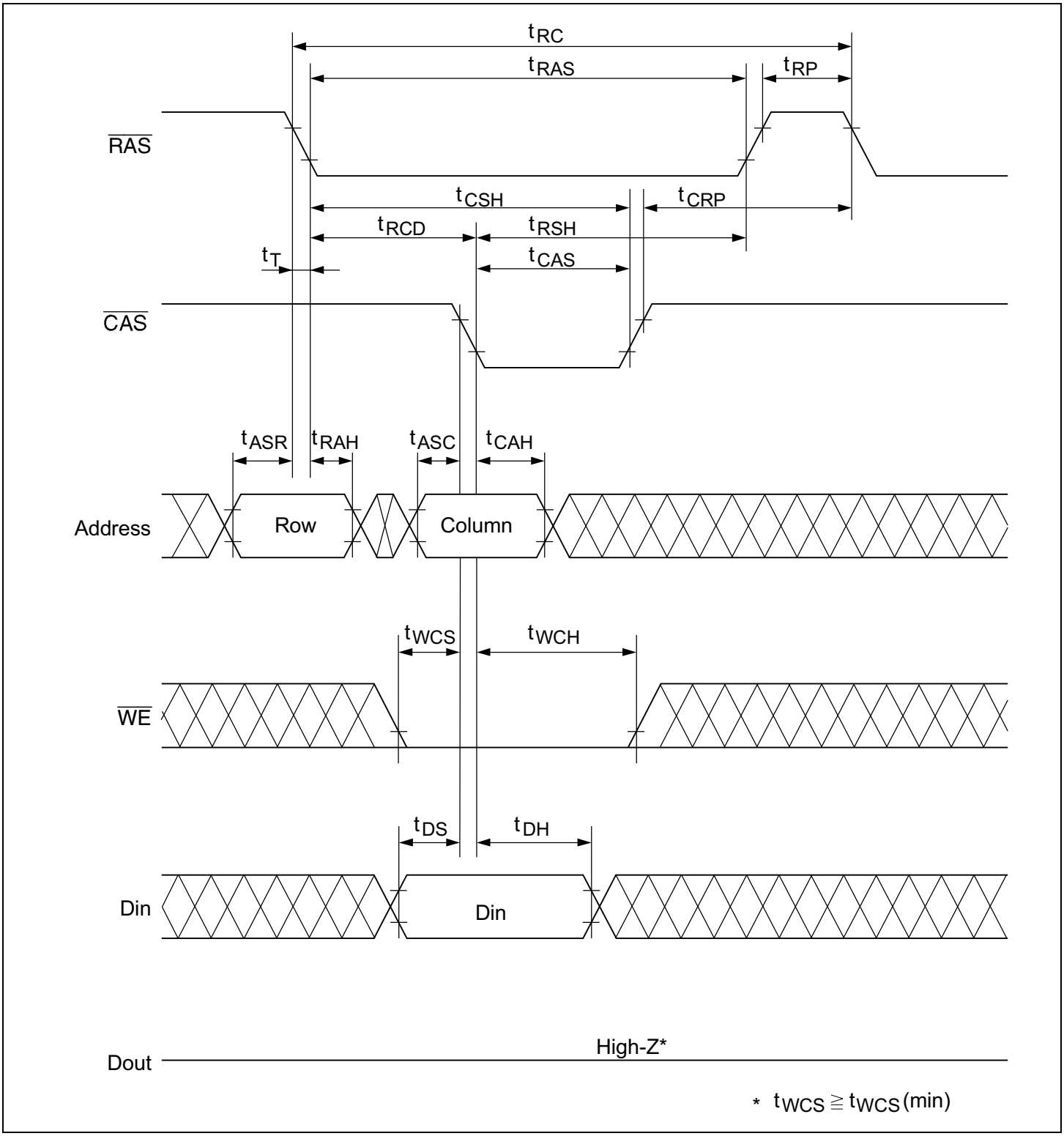

Delayed Write Cycle[*18]

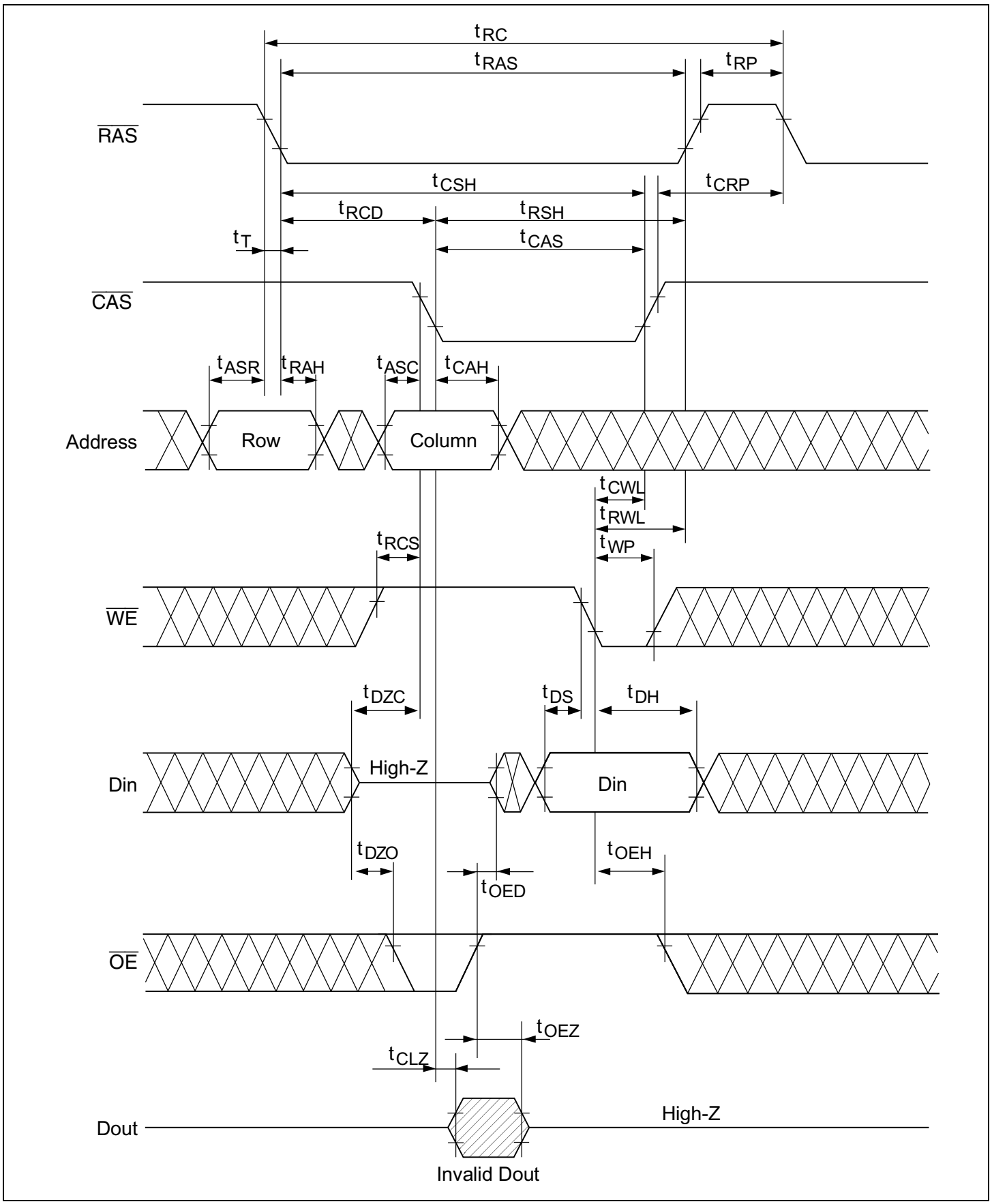

Read-Modify-Write Cycle[*18]

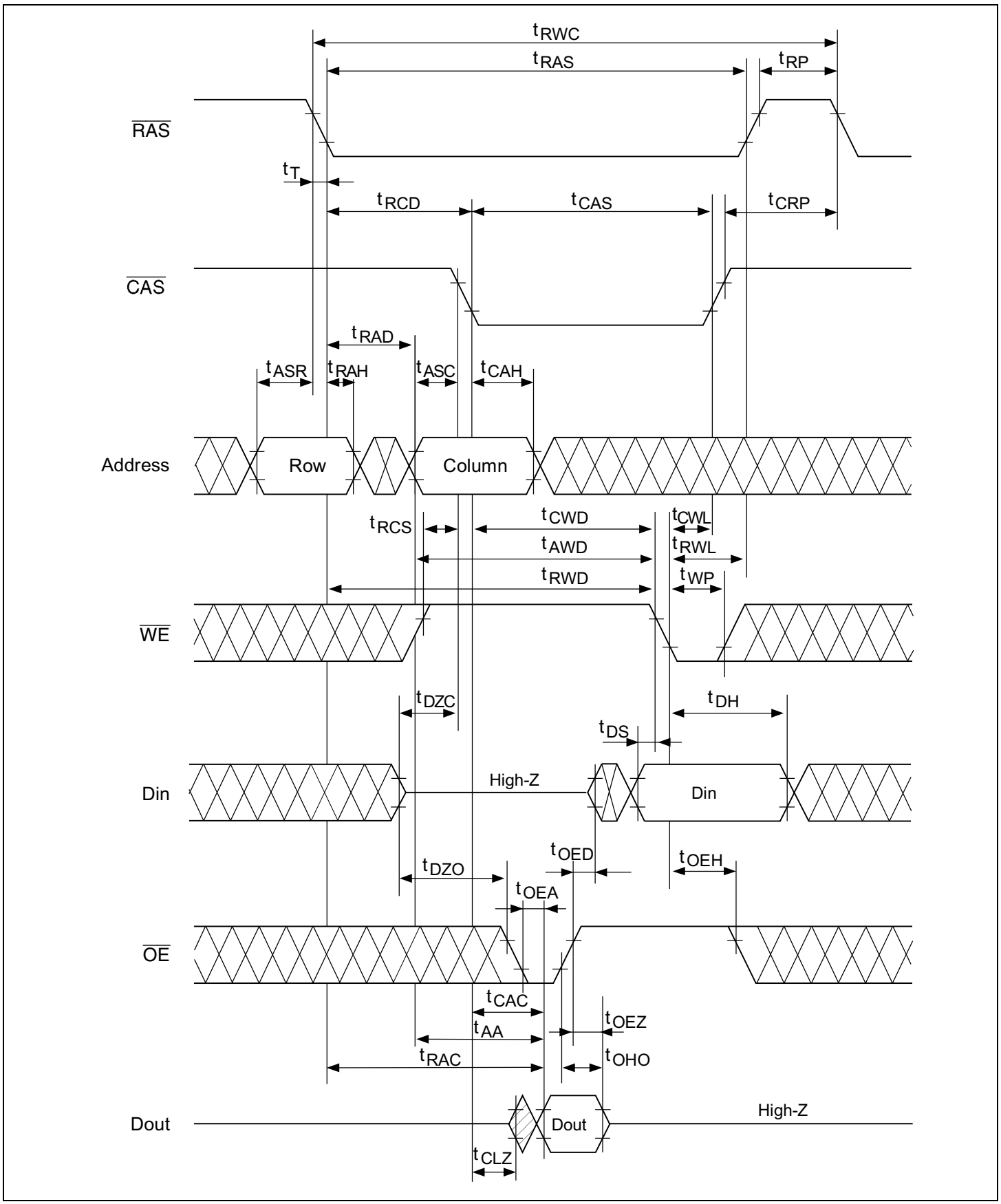

$\overline{RAS}$-Only Refresh Cycle

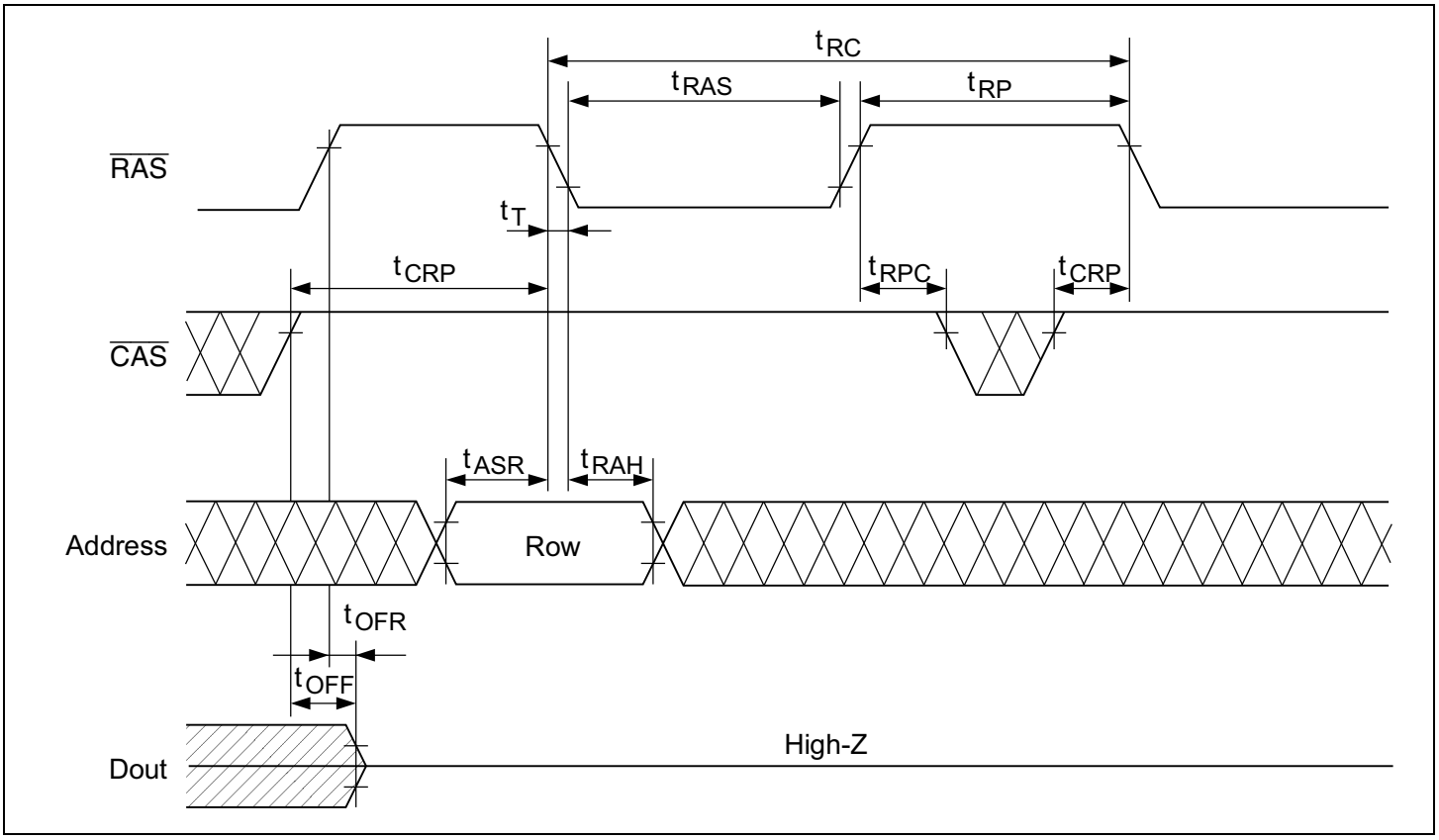

$\overline{CAS}$-Before-$\overline{RAS}$ Refresh Cycle

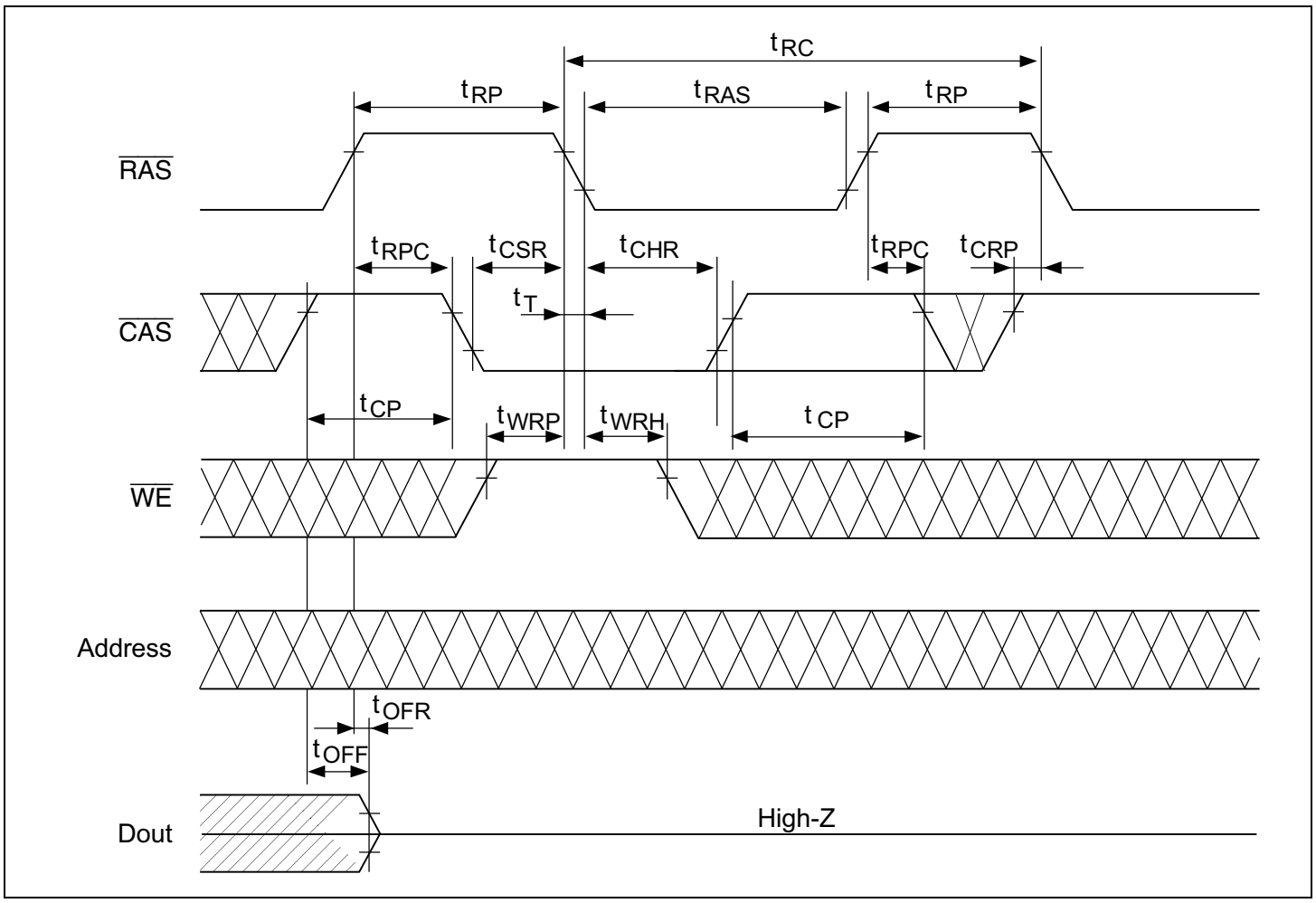

Hidden Refresh Cycle

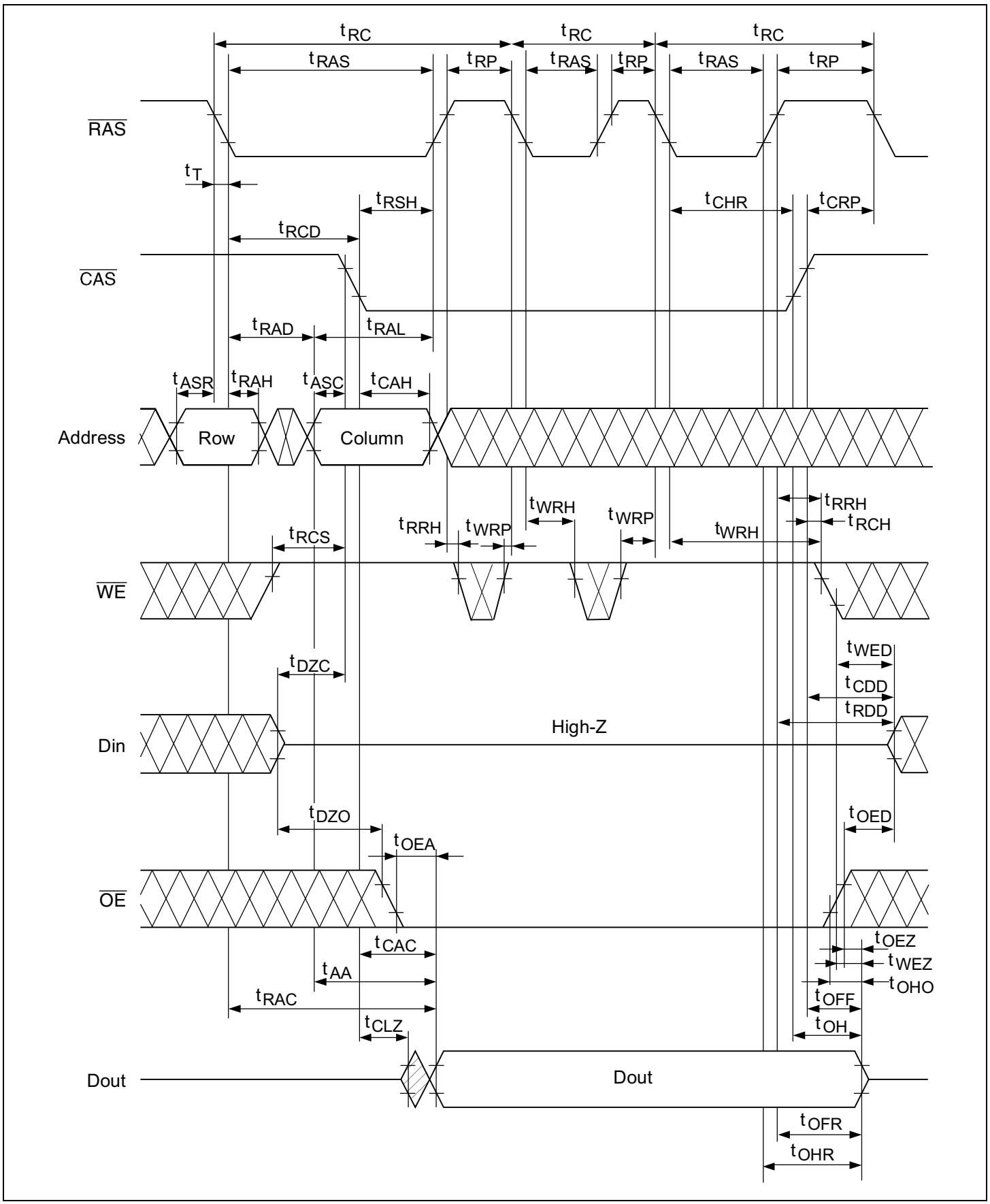

EDO Page Mode Read Cycle

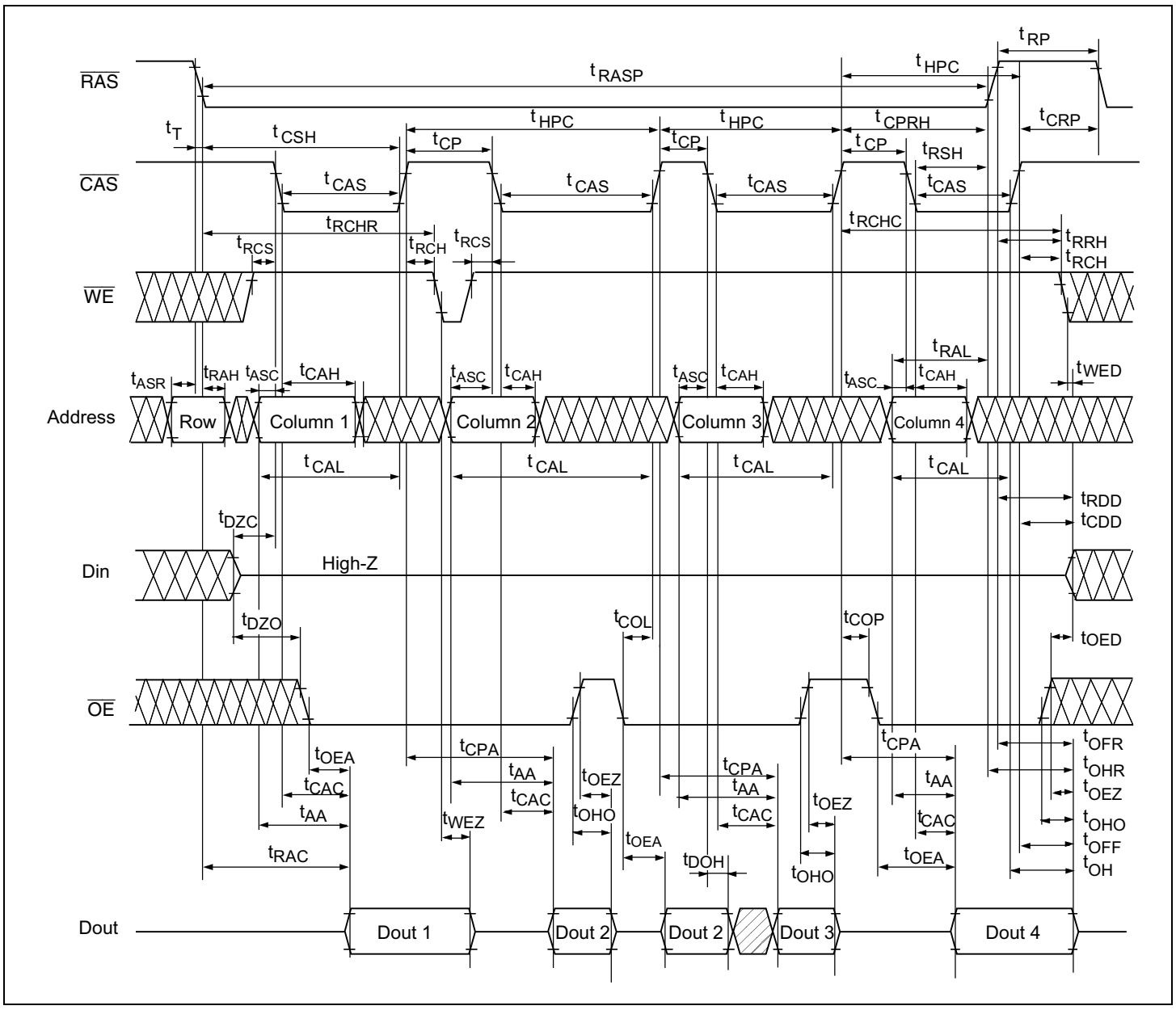

EDO Page Mode Early Write Cycle

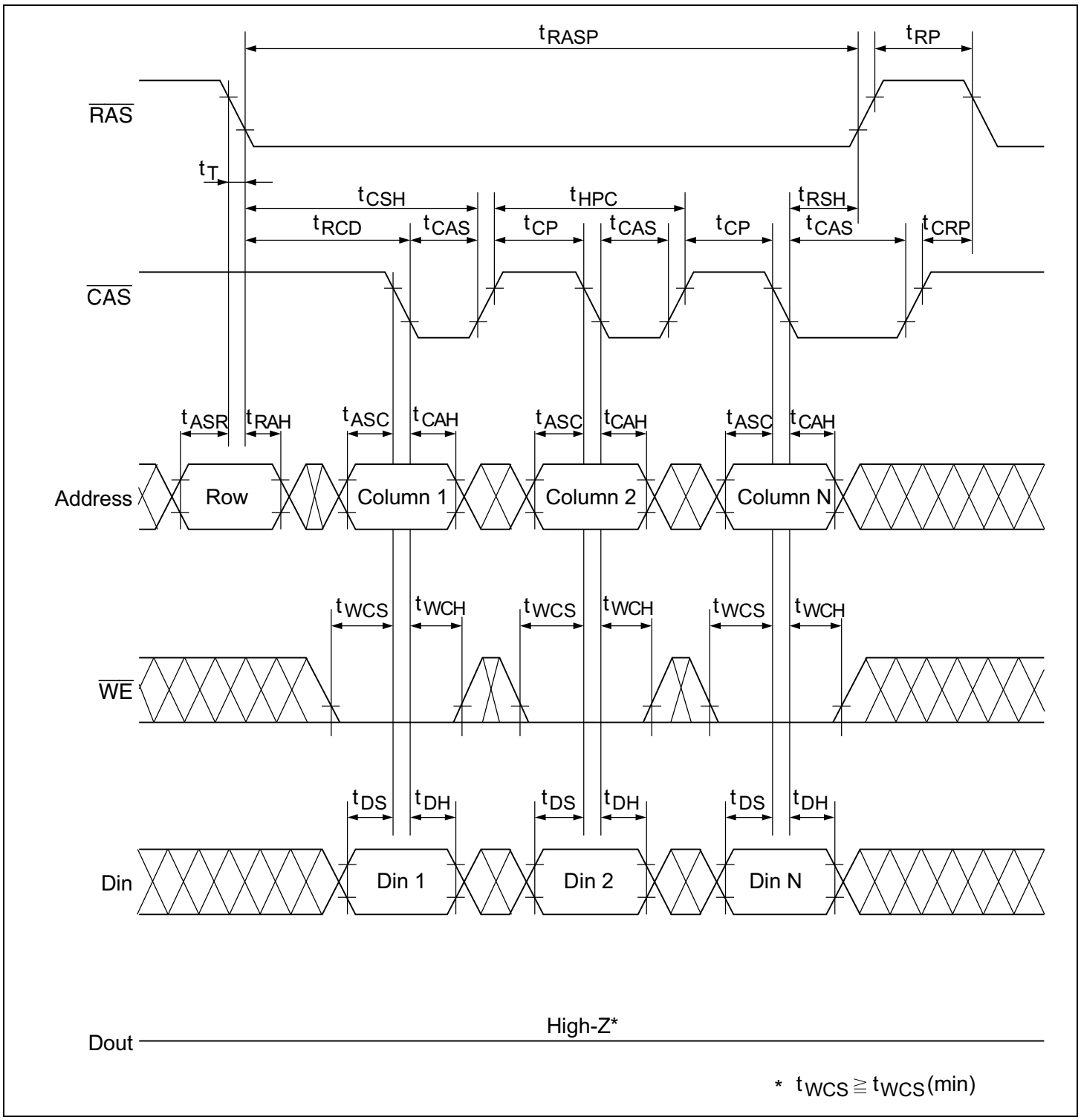

EDO Page Mode Delayed Write Cycle[*18]

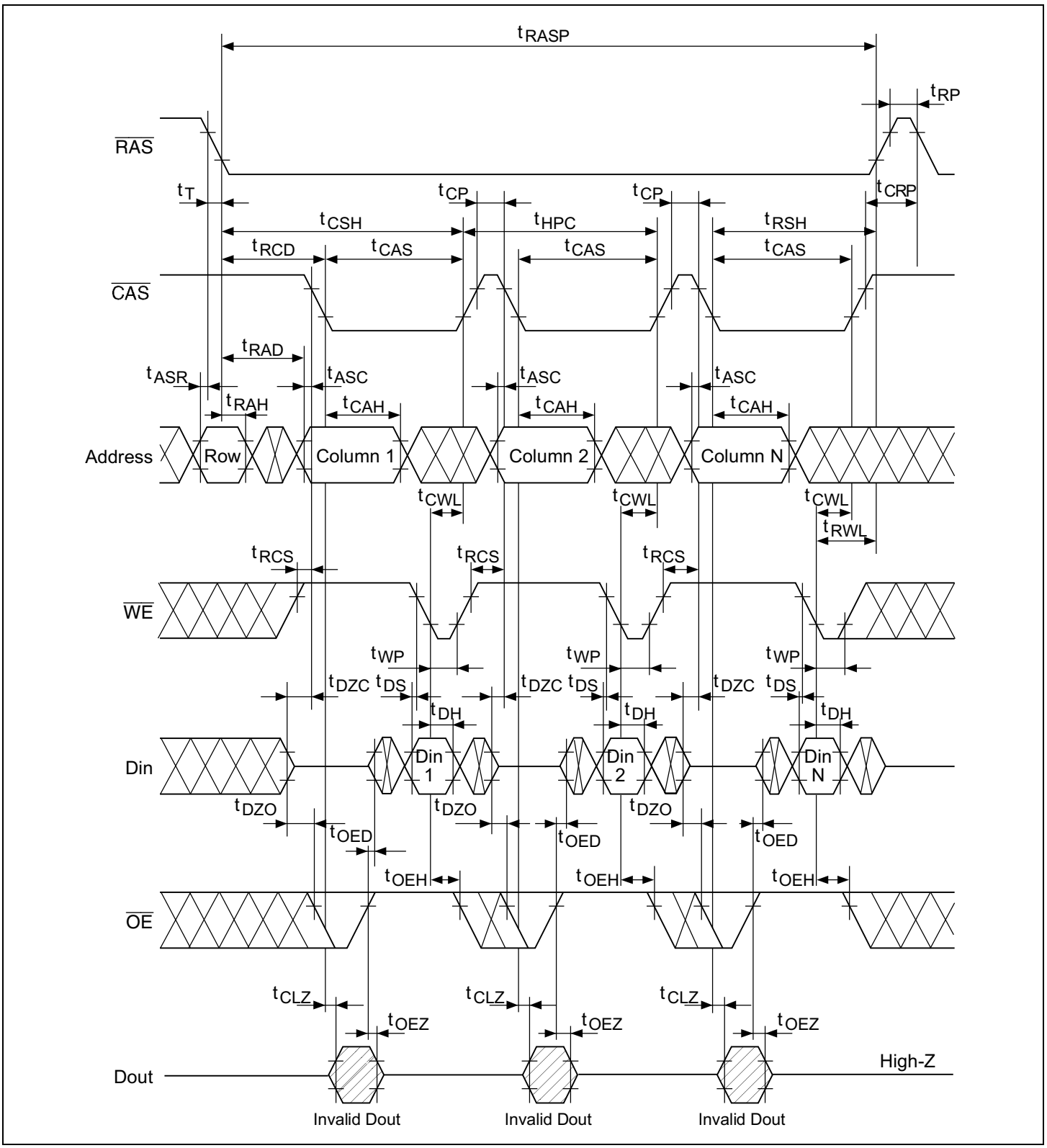

EDO Page Mode Read-Modify-Write Cycle[*18]

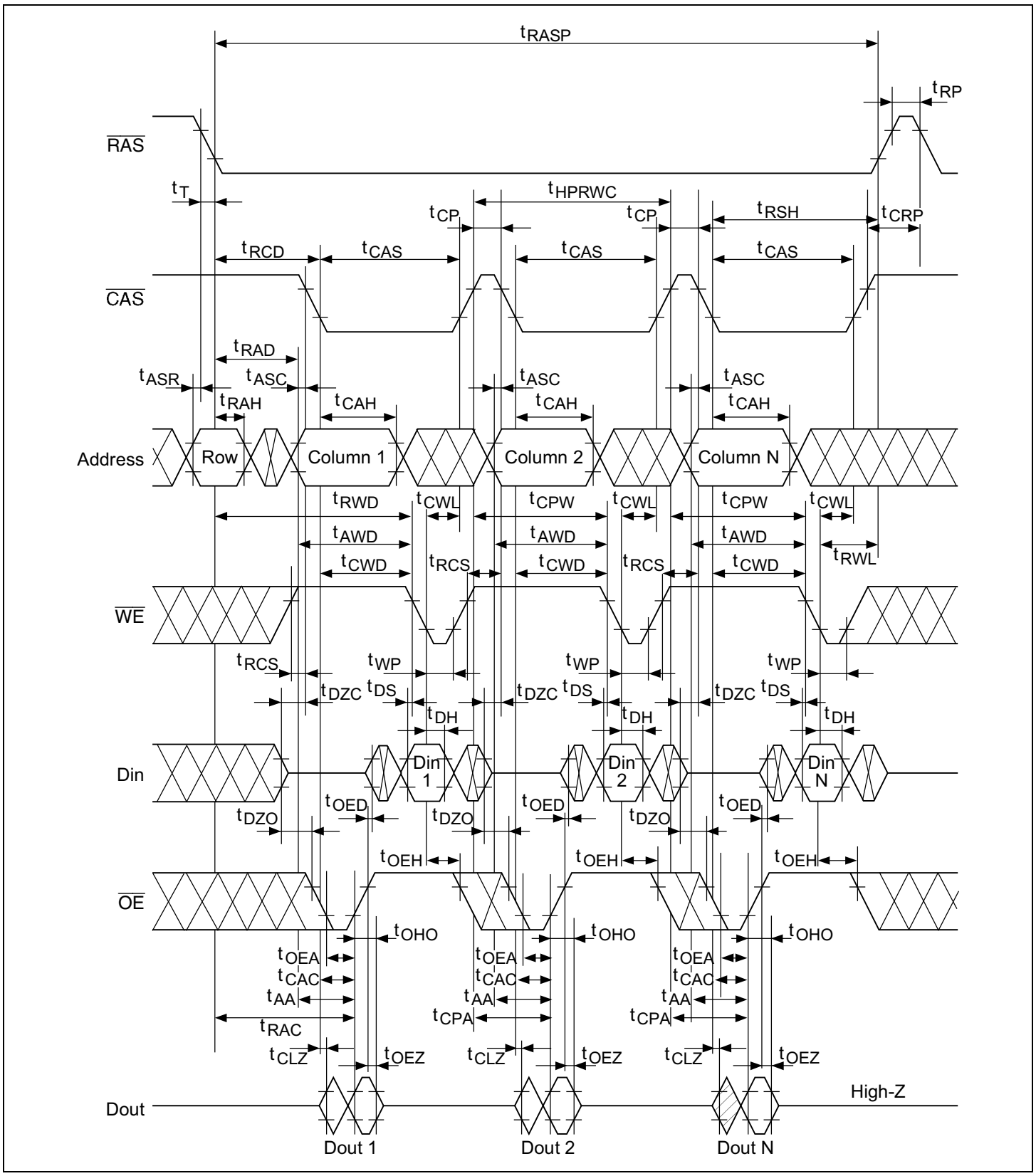

EDO Page Mode Mix Cycle (1)

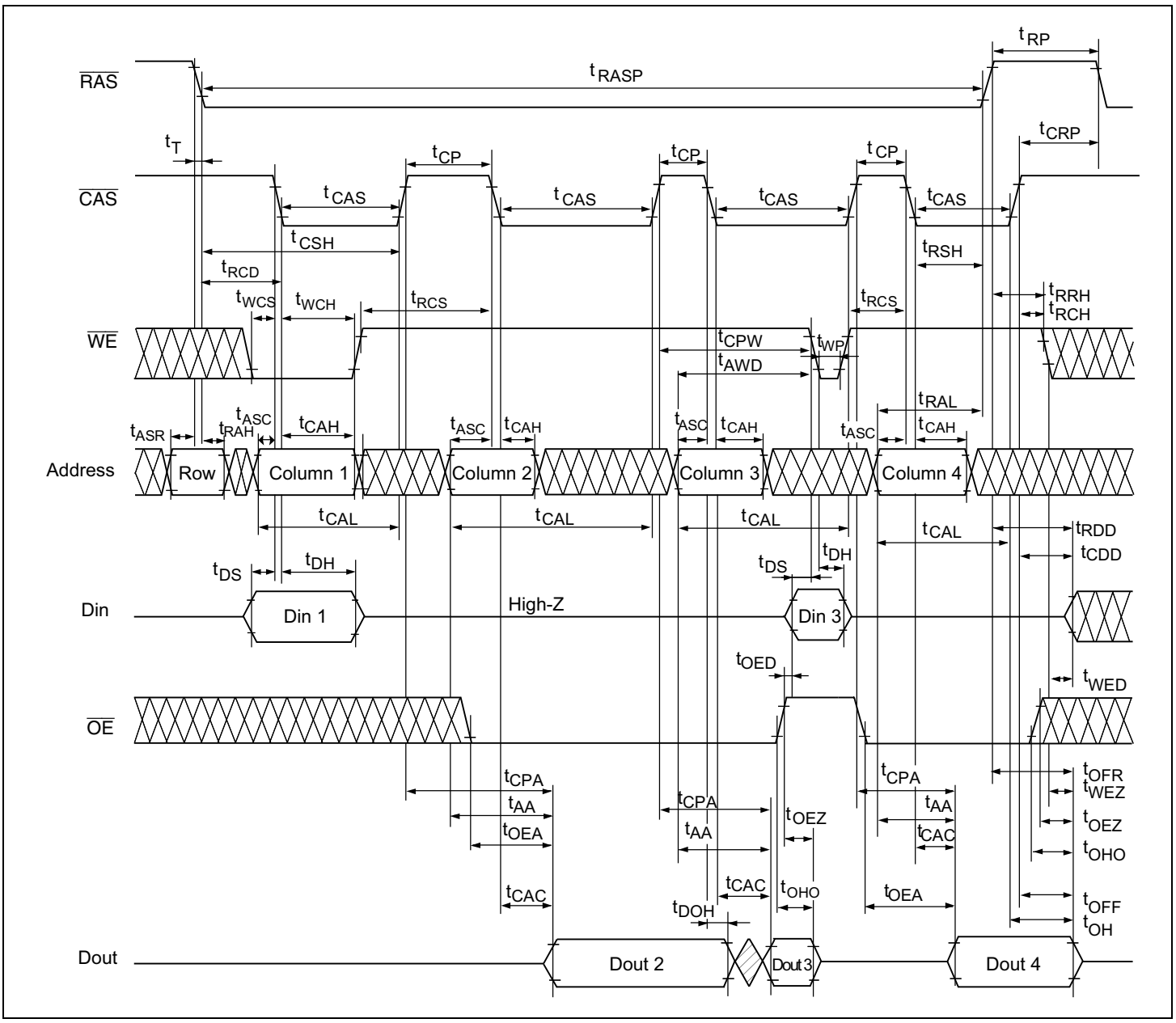

EDO Page Mode Mix Cycle (2)

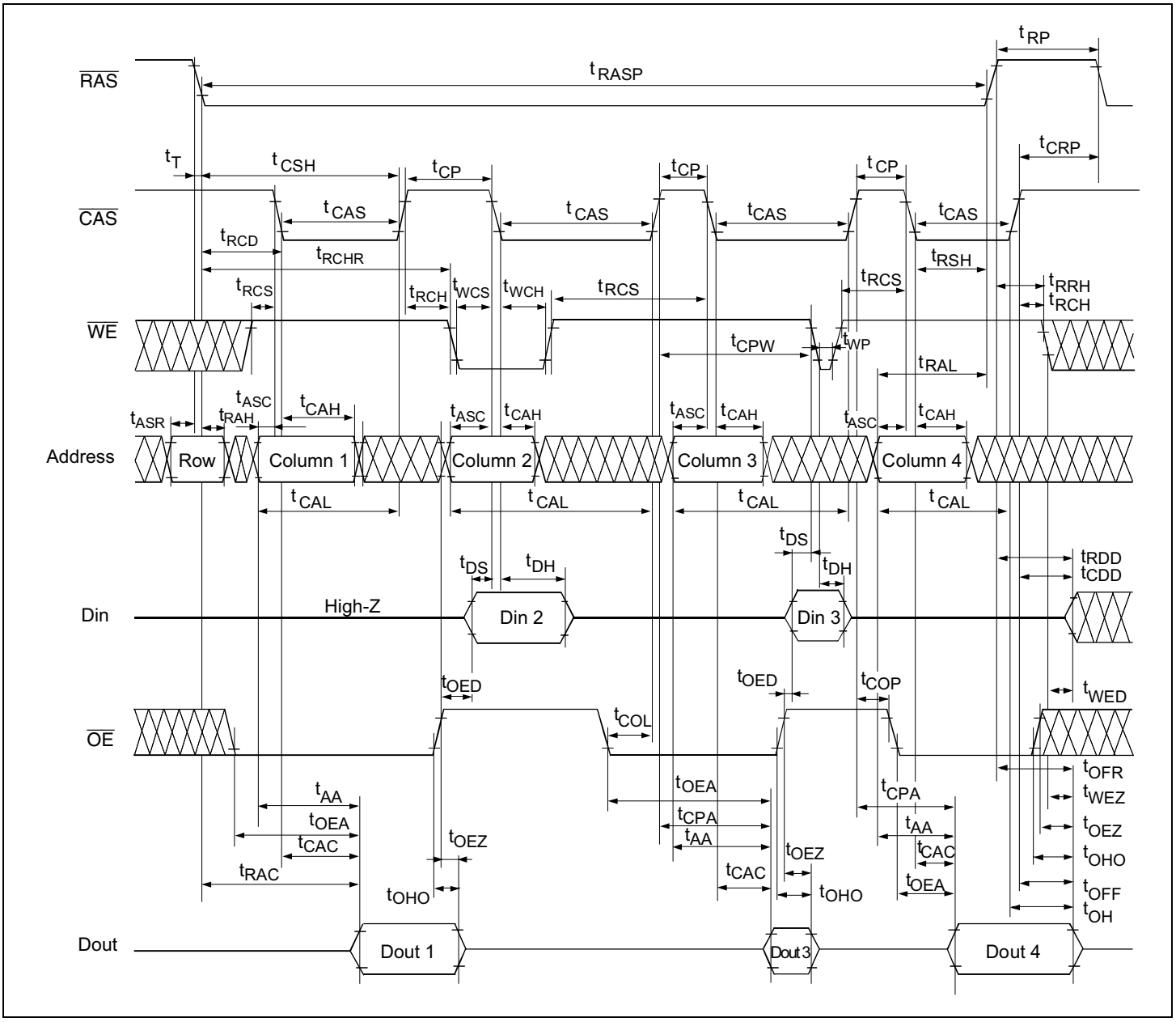

Self Refresh Cycle (L-version)*[21, 22, 23, 24]

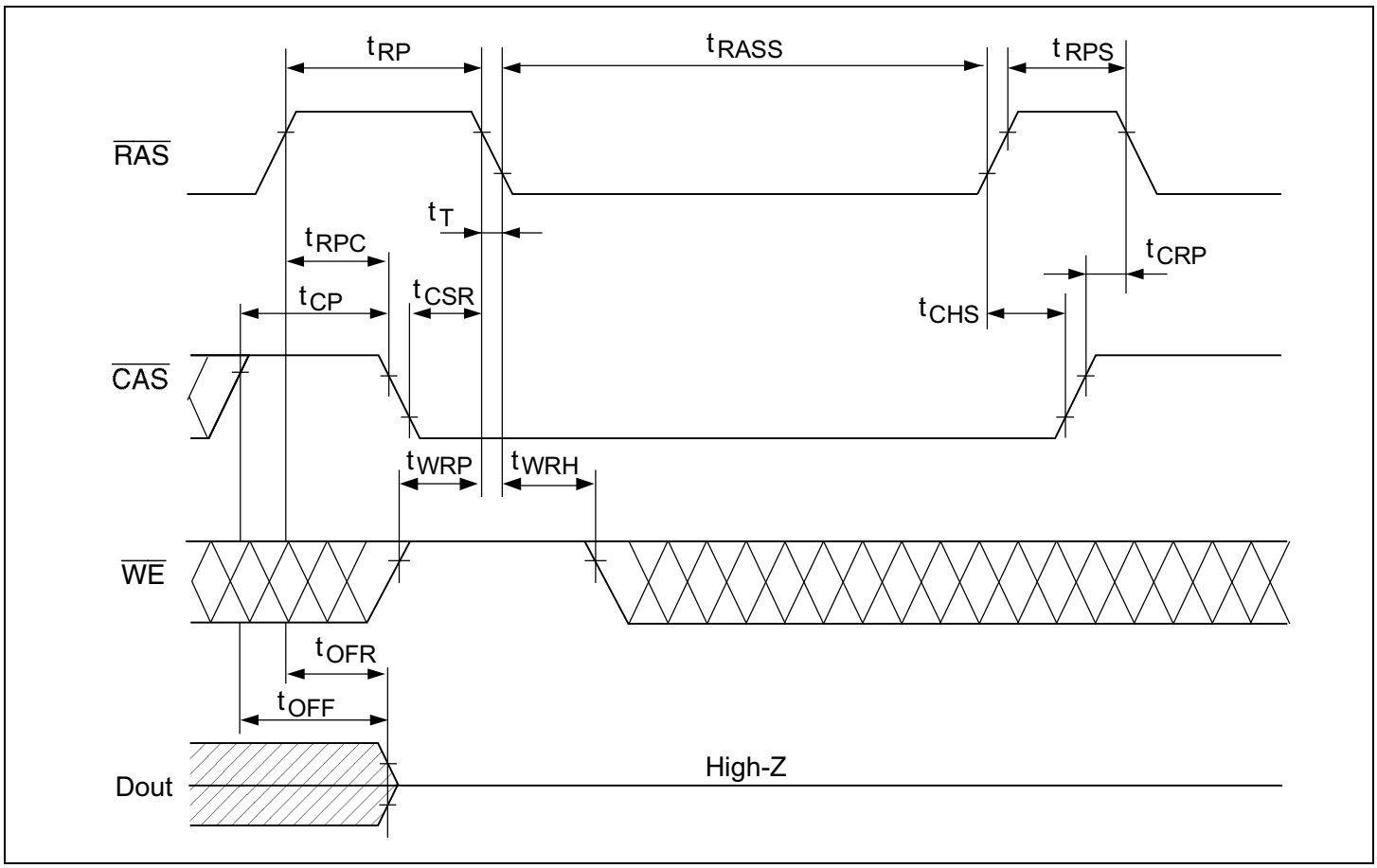

Package Dimensions

HM51W17805BJ/BLJ Series (CP-28DA) Unit: mm

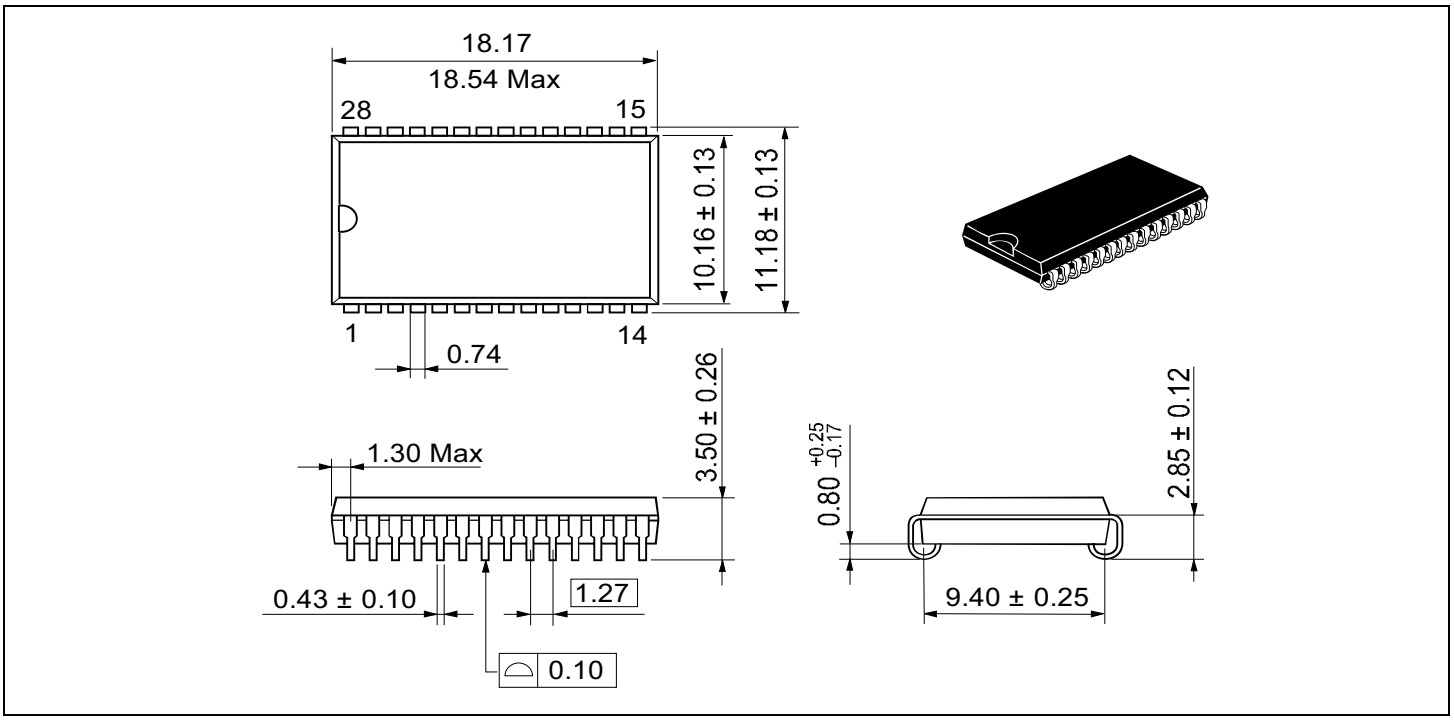

HM51W17805BS/BLS Series (CP-28DNA) Unit: mm

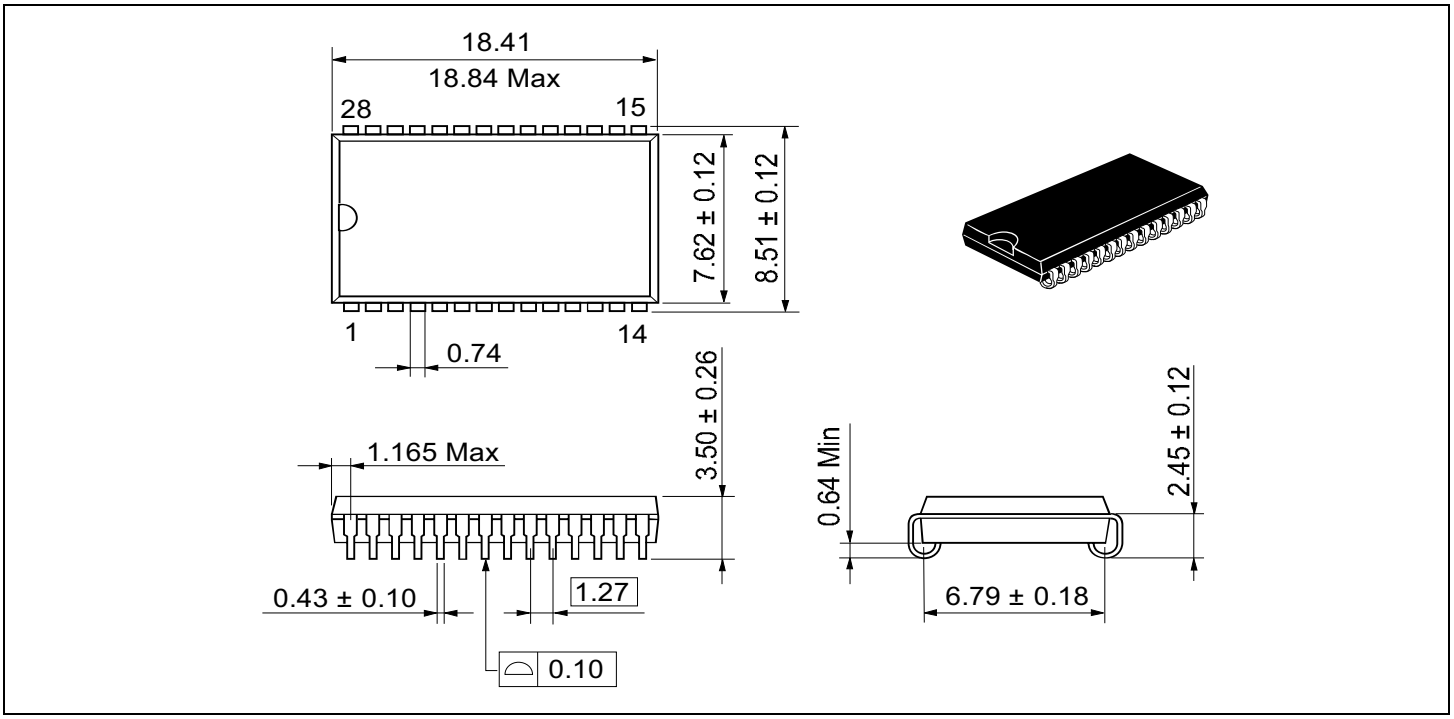

Package Dimensions (cont)

HM51W17805BTT/BLTT Series (TTP-28DA) Unit: mm

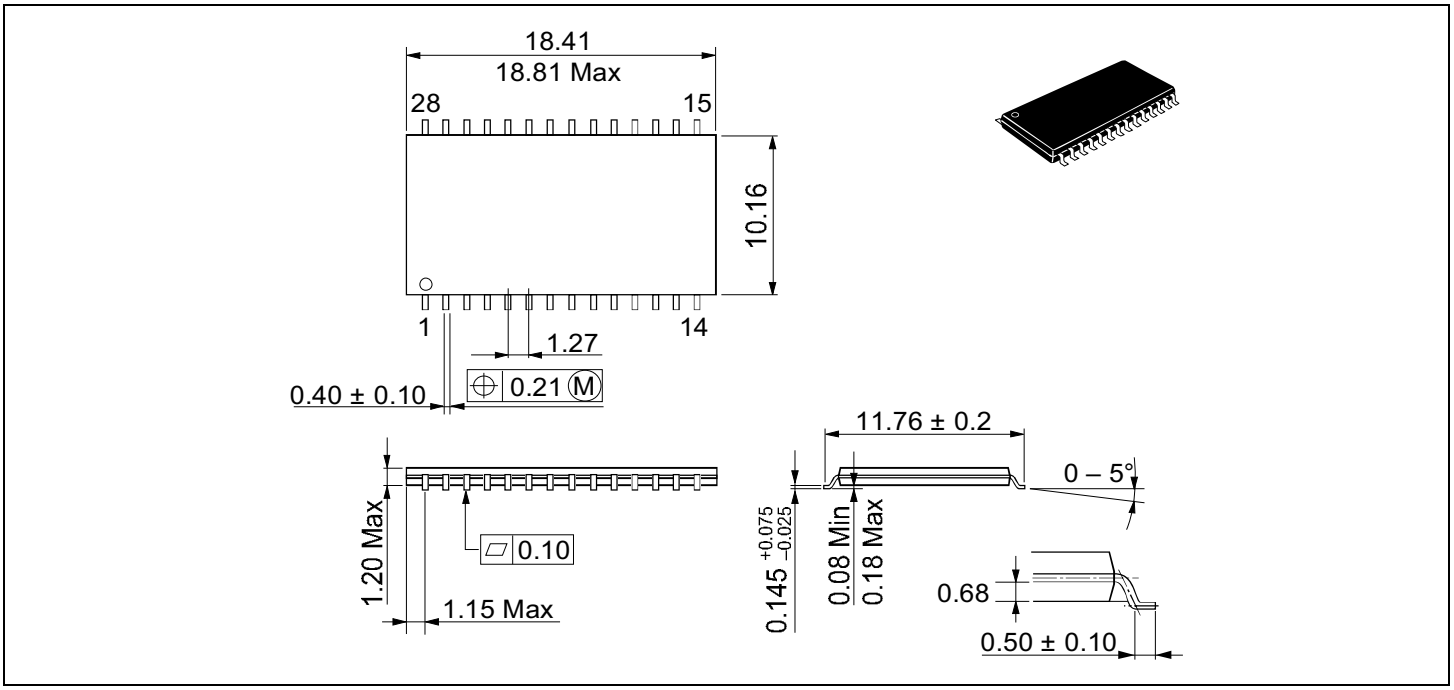

HM51W17805BTS/BLTS Series (TTP-28DB) Unit: mm

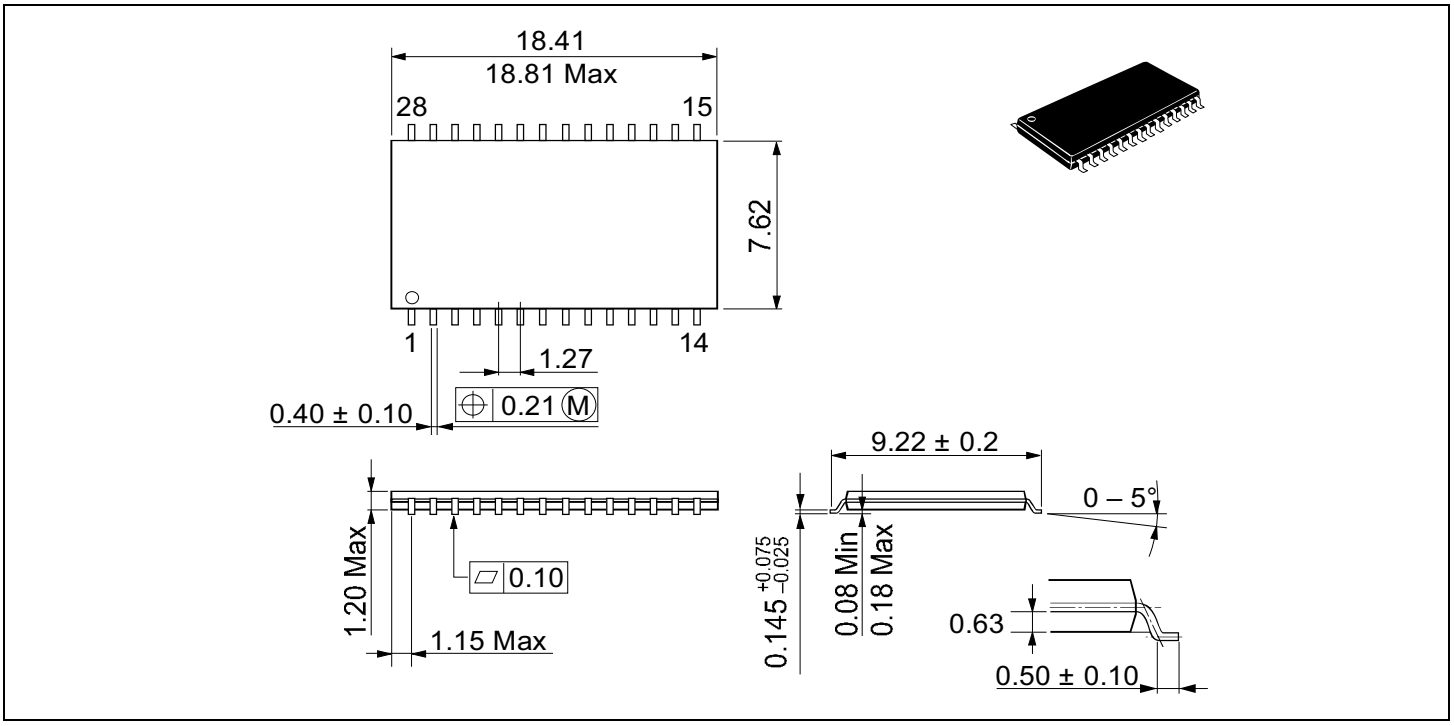

When using this document, keep the following in mind:

1. This document may, wholly or partially, be subject to change without notice.
2. All rights are reserved: No one is permitted to reproduce or duplicate, in any form, the whole or part of this document without Hitachi's permission.
3. Hitachi will not be held responsible for any damage to the user that may result from accidents or any other reasons during operation of the user's unit according to this document.
4. Circuitry and other examples described herein are meant merely to indicate the characteristics and performance of Hitachi's semiconductor products. Hitachi assumes no responsibility for any intellectual property claims or other problems that may result from applications based on the examples described herein.
5. No license is granted by implication or otherwise under any patents or other rights of any third party or Hitachi, Ltd.
6. MEDICAL APPLICATIONS: Hitachi's products are not authorized for use in MEDICAL APPLICATIONS without the written consent of the appropriate officer of Hitachi's sales company. Such use includes, but is not limited to, use in life support systems. Buyers of Hitachi's products are requested to notify the relevant Hitachi sales offices when planning to use the products in MEDICAL APPLICATIONS.

HITACHI

Hitachi, Ltd.
Semiconductor & IC Div.
Nippon Bldg., 2-6-2, Ohte-machi, Chiyoda-ku, Tokyo 100, Japan
Tel: Tokyo (03) 3270-2111
Fax: (03) 3270-5109

For further information write to:

Hitachi America, Ltd.
Semiconductor & IC Div.
2000 Sierra Point Parkway
Brisbane, CA. 94005-1835
U S A
Tel: 415-589-8300
Fax: 415-583-4207

Hitachi Europe GmbH
Electronic Components Group
Continental Europe
Dornacher Straße 3
D-85622 Feldkirchen
München
Tel: 089-9 91 80-0
Fax: 089-9 29 30 00

Hitachi Europe Ltd.
Electronic Components Div.
Northern Europe Headquarters
Whitebrook Park
Lower Cookham Road
Maidenhead
Berkshire SL6 8YA
United Kingdom
Tel: 0628-585000
Fax: 0628-778322

Hitachi Asia Pte. Ltd.
16 Collyer Quay #20-00
Hitachi Tower
Singapore 0104
Tel: 535-2100
Fax: 535-1533

Hitachi Asia (Hong Kong) Ltd.
Unit 706, North Tower,
World Finance Centre,
Harbour City, Canton Road
Tsim Sha Tsui, Kowloon
Hong Kong
Tel: 27359218
Fax: 27306071

Revision Record

Rev.	Date	Contents of Modification	Drawn by	Approved by
0.0	Oct. 19, 1995	Initial issue	Y. Takahashi	K. Hayakawa
1.0	Dec. 25, 1995	Deletion of preliminary Timing waveforms Deletion of note: $t_{OEH} \geq t_{CWE}$	J. Miyake	K. Hayakawa
2.0	May. 30, 1996	Addition of HM51W17805B-6 Series Addition of HM51W17805BTS/BLTS Series (TTP-28DB) Addition of HM51W17805BS/BLS Series (CP-28DNA) DC characteristics V_{OH} min: 2 V to 2.4 V AC characteristics Change of notes18 and 25 Timing waveforms Change of early write cycle and EDO page mode early write cycle		