Hybrid Systems CORPORATION

DAC337
Adjustment-Free, 8 & 10-Bit DACs

FEATURES

- 8 and 10 Bit Versions
- No Zero Or Gain Adjusts
- ±½LSB Linearity
- Internal Reference and Output Amplifier
- MIL-STD-883 or Comm./Indust. Processing
- Low Power

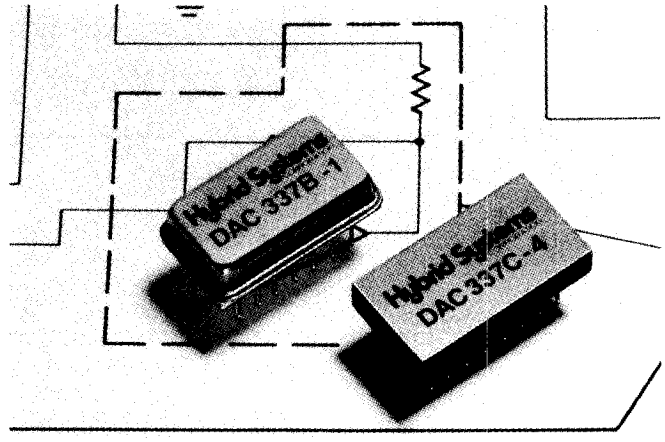

DESCRIPTION

The DAC337 Series digital-to-analog converters are designed for completely adjustment-free operation.

The word "simplicity" best characterizes the DAC337 Series. All models are housed in hermetically-sealed DIP style packages and operate on ±15V power supplies. Each model incorporates a precision reference, highly stable thin-film nichrome resistor network, output amplifier, and switches. ±½ LSB linearity is achieved without the use of external zero and gain adjustment circuits.

Both the 8- and 10-Bit versions are offered with the choice of four output voltage ranges: 0 to +10, 0 to −10 (unipolar) and ±5, ±10 (bipolar).

Hybrid Systems offers two grades of processing: commercial/industrial (Option C) and MIL-STD-883 Rev. C, Level B (Option B).

FUNCTIONAL DIAGRAM

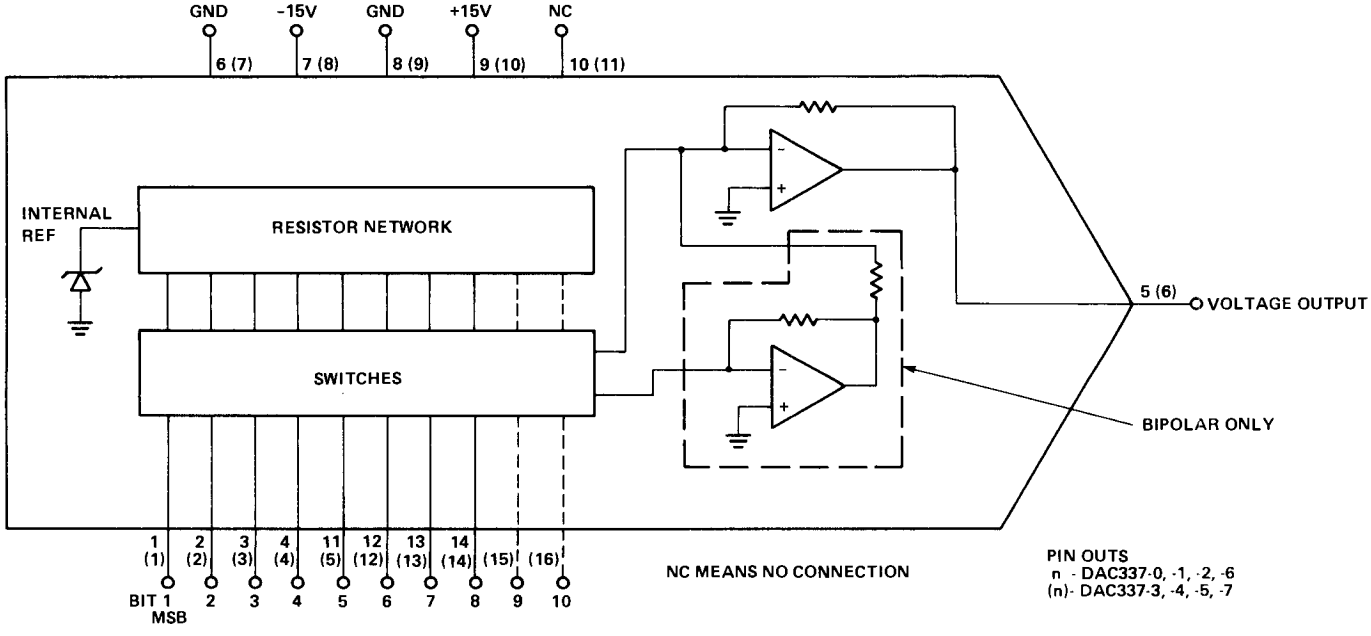

7

SPECIFICATIONS

(Typical for all models @ +25°C and nominal power supplies unless otherwise noted)

SERIES	DAC337
TYPE	Fixed Ref., Volt, Output
DIGITAL INPUT	
Resolution	
DAC337-0, -1, -2, -6	8 Bits
DAC337-3, -4, -5, -7	10 Bits
Coding	
DAC337-0, -3	Complementary Binary
DAC337-1, -4, -6, -7	Offset Binary
DAC337-2, -5	Binary
Logic Compatibility	TTL, DTL, CMOS (from 5.0V Supply) V_{IH}=2.4V (typ), 3.5V (min) V_{IL}=0.8V (max)
ANALOG OUTPUT	
Voltage	
DAC337-0, -3	0 to -10V @ -5mA
DAC337-1, -4	±5V @ ±5mA
DAC337-2, -5	0 to +10V @ +5mA
DAC337-6, -7	±10V @ ±5mA
Impedance	≤0.1Ω
REFERENCE	Internal
STATIC PERFORMANCE	
Integral Linearity	±½ LSB, max
Differential Linearity	±½ LSB, typ; ±1 LSB, max
DYNAMIC PERFORMANCE	
Settling Time to ½ lsb for F.S.R. Change	
DAC337-0, -1, -2, -3, -4, -5	20μS
DAC337-6, -7	40μS
For 1 lsb change	5μS, typ; 10μS, max
Slew Rate	0.5V/μS
STABILITY (T_{MIN} to T_{MAX})	
Accuracy	
DAC337-0, -1, -2, -6	1 LSB
DAC337-3, -4, -5, -7	4 LSB
Linearity	±½ LSB, max
Offset	±1 LSB, max
POWER SUPPLY	
Voltage @ Current	+15V ± 20% @ +6mA, max -15V ± 20% @ -13mA, max
Power Supply Rejection Ratio	+15V Supply, 0.1% F.S.R./Volt -15V Supply, 0.2% F.S.R./Volt
TEMPERATURE RANGE	
Operating	
"C" models	0 to +70°C
"B" models	-55°C to +125°C
Storage	-65°C to +150°C
MECHANICAL	
Case Style	Metal or ceramic at manufacturer's option.

Case Envelope Dimensions

DAC337-0, -1, -2, -6

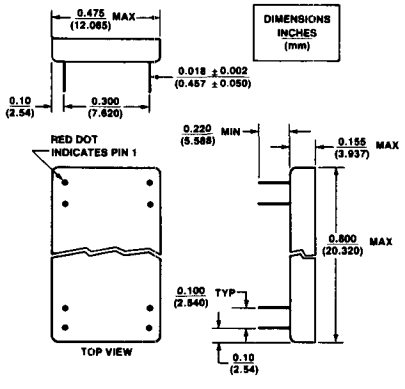

PIN	FUNCTION	PIN	FUNCTION
1	BIT 1 (MSB)	14	BIT 8 (LSB)
2	BIT 2	13	BIT 7
3	BIT 3	12	BIT 6
4	BIT 4	11	BIT 5
5	OUTPUT	10	N.C.
6	GND	9	+15V
7	-15V	8	GND

NOTE: N.C. MEANS NO CONNECTION

DAC337-3, -4, -5, -7

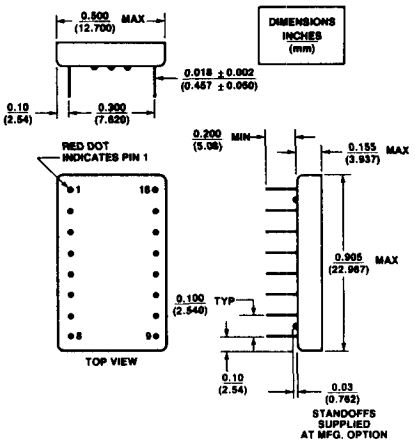

PIN	FUNCTION	PIN	FUNCTION
1	BIT 1 (MSB)	16	BIT 10 (LSB)
2	BIT 2	15	BIT 9
3	BIT 3	14	BIT 8
4	BIT 4	13	BIT 7
5	BIT 5	12	BIT 6
6	OUTPUT	11	N.C.
7	GND	10	+15V
8	-15V	9	GND

NOTE: N.C. MEANS NO CONNECTION

APPLICATIONS INFORMATION

RECOMMENDED POWER SUPPLY BY-PASS CIRCUIT

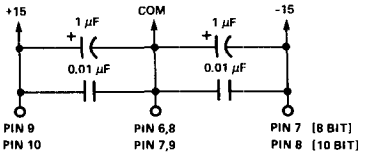

TRANSFER CHARACTERISTICS

DAC337	TRANSFER CHARACTERISTICS ANALOG OUTPUT							
INPUT PINS	337-0	-1	-2	-6	-3	-4	-5	-7
11111111	0V	+5V	+9.961	+10V				
10000000	-4.961V	+0.040V	+5V	+0.080V				
01111111	-5V	0	+4.961	0V				
00000000	-9.961V	-4.961V	0V	-9.921V				
1111111111					0V	+5V	+9.990V	+10V
1000000000					-4.990V	+0.010V	+5V	+0.020V
0111111111					-5V	0V	+4.990V	0V
0000000000					-9.990V	-4.990V	0V	-9.980V

CAUTION: ESD (Electro-Static Discharge) sensitive device. Permanent damage may occur when unconnected devices are subjected to high energy electrostatic fields. Unused devices must be stored in conductive foam or shunts. Protective foam should be discharged to the destination socket before devices are removed. Devices should be handled at static safe workstations only. Unused digital inputs must be grounded or tied to the logic supply voltage. Unless otherwise noted, the supply voltage at any digital input should never exceed the supply voltage by more than 0.5 volts or go below −0.5 volts. If this condition cannot be maintained, limit input current on digital inputs by using series resistors or contact Hybrid Systems for technical assistance.

Specifications subject to change without notice.