D0767

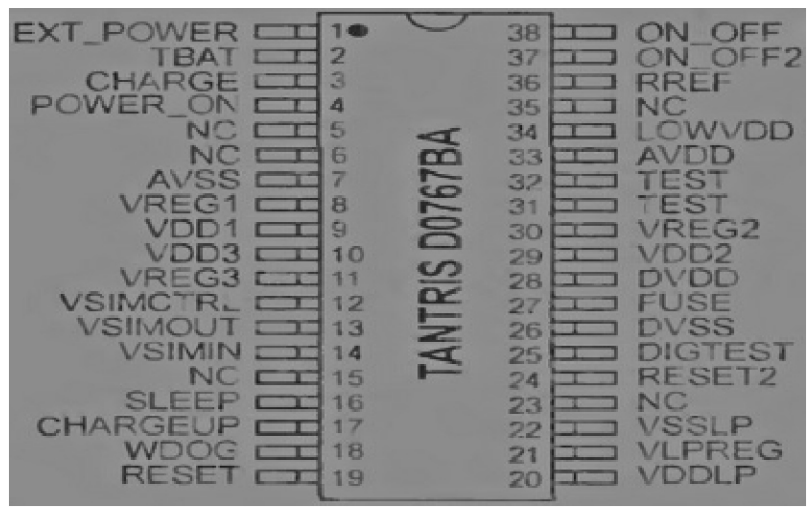
EXT_POWER 1
TBAT 2
CHARGE 3
POWER_ON 4
NC 5
NC 6
AVSS 7
VREG1 8
VDD1 9
VDD3 10
VREG3 11
VSIMCTRL 12
VSIMOUT 13
VSIMIN 14
NC 15
SLEEP 16
CHARGEUP 17
WDOG 18
RESET 19
TANTRIS D0767BA
38 ON_OFF
37 ON_OFF2
36 RREF
35 NC
34 LOWVDD
33 AVDD
32 TEST
31 TEST
30 VREG2
29 VDD2
28 DVDD
27 FUSE
26 DVSS
25 DIGTEST
24 RESET2
23 NC
22 VSSLP
21 VLPREG
20 VDDLP

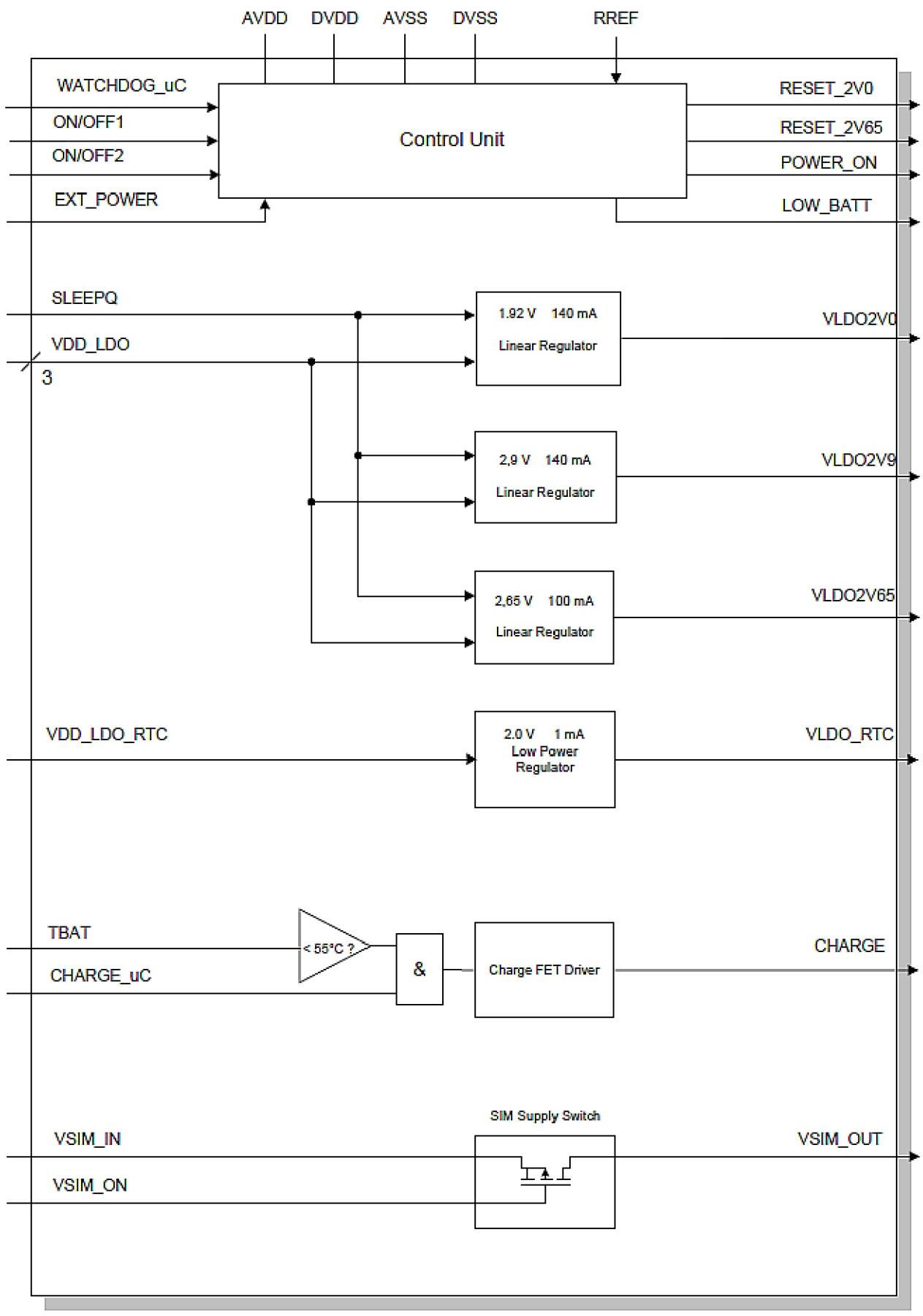
AVDD
DVDD
AVSS
DVSS
RREF
WATCHDOG_uC
ON/OFF1
ON/OFF2
EXT_POWER
Control Unit
RESET_2V0
RESET_2V65
POWER_ON
LOW_BATT
SLEEPQ
VDD_LDO
3
1.92 V 140 mA
Linear Regulator
VLDO2V0
2,9 V 140 mA
Linear Regulator
VLDO2V9
2,65 V 100 mA
Linear Regulator
VLDO2V65
VDD_LDO_RTC
2.0 V 1 mA
Low Power
Regulator
VLDO_RTC
TBAT
CHARGE_uC
< 55°C ?
&
Charge FET Driver
CHARGE
SIM Supply Switch
VSIM_IN
VSIM_ON
VSIM_OUT

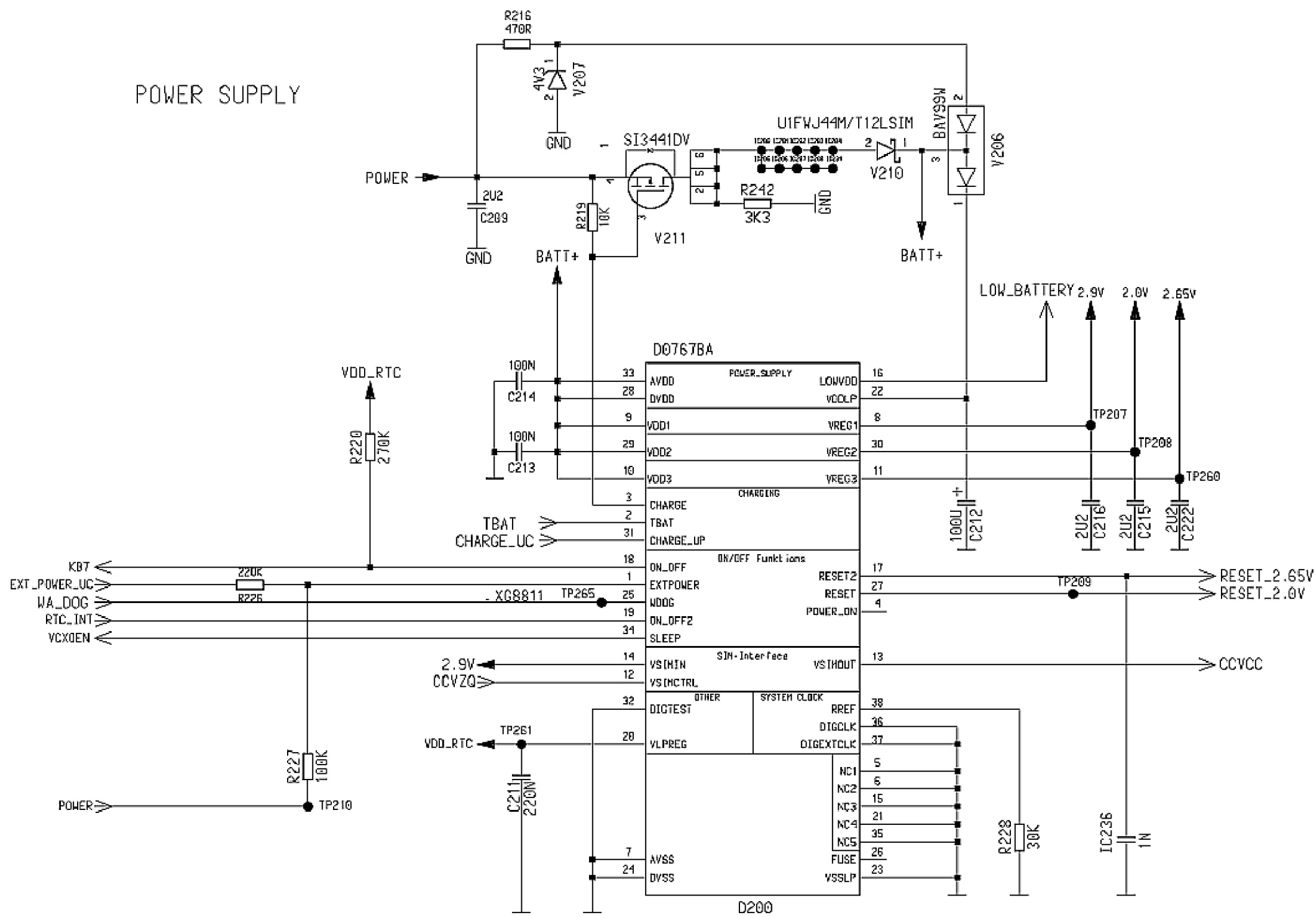
POWER SUPPLY
R216
470R
4V3
V207
GND
SI3441DV
U1FWJ44M/T12LSIM
BAV99W
V206
V210
POWER
2U2
C209
R219
10K
V211
R242
3K3
BATT+
LOW_BATTERY
2.9V
2.0V
2.65V
D0767BA
VDD_RTC
100N
C214
C213
R220
270K
POWER_SUPPLY
AVDD
DVDD
VDD1
VDD2
VDD3
LOWVDD
VDDLP
VREG1
VREG2
VREG3
TP207
TP208
TP260
CHARGING
CHARGE
TBAT
CHARGE_UP
TBAT
CHARGE_UC
100U
C212
2U2
C216
2U2
C215
2U2
C222
ON/OFF Funktions
ON_OFF
EXTPOWER
WDOG
ON_OFF2
SLEEP
RESET2
RESET
POWER_ON
KB7
EXT_POWER_UC
WA_DOG
RTC_INT
VCXOEN
220K
R226
XG8811
TP265
TP209
RESET_2.65V
RESET_2.0V
SIM-Interface
VSIMIN
VSIMCTRL
VSIMOUT
2.9V
CCVZQ
CCVCC
OTHER
DIGTEST
VLPREG
SYSTEM CLOCK
RREF
DIGCLK
DIGEXTCLK
TP261
VDD_RTC
R227
100K
C211
220N
NC1
NC2
NC3
NC4
NC5
FUSE
VSSLP
AVSS
DVSS
R228
30K
IC236
1N
POWER
TP210
D200