FAIRCHILD SEMICONDUCTOR®

November 2009

CNY171M, CNY172M, CNY173M, CNY174M, CNY17F1M, CNY17F2M, CNY17F3M, CNY17F4M, MOC8106M, MOC8107M Phototransistor Optocouplers

Features

- UL recognized (File # E90700, Vol. 2)
- VDE recognized
  - Add option V (e.g., CNY17F2VM)
  - File #102497
- Current transfer ratio in select groups
- High BV_{CEO}: 70V minimum (CNY17XM, CNY17FXM, MOC810XM)
- Closely matched current transfer ratio (CTR) minimizes unit-to-unit variation.
- Very low coupled capacitance along with no chip to pin 6 base connection for minimum noise susceptability (CNY17FXM, MOC810XM)

Applications

- Power supply regulators
- Digital logic inputs
- Microprocessor inputs
- Appliance sensor systems
- Industrial controls

Description

The CNY17XM, CNY17FXM and MOC810XM devices consist of a Gallium Arsenide IRED coupled with an NPN phototransistor in a dual in-line package.

Package Outlines

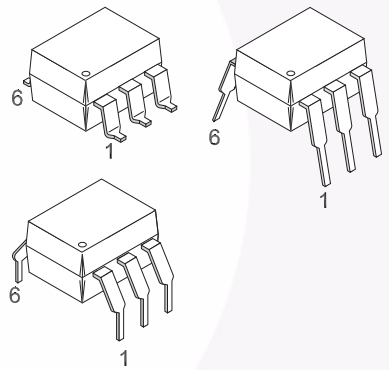

Schematics

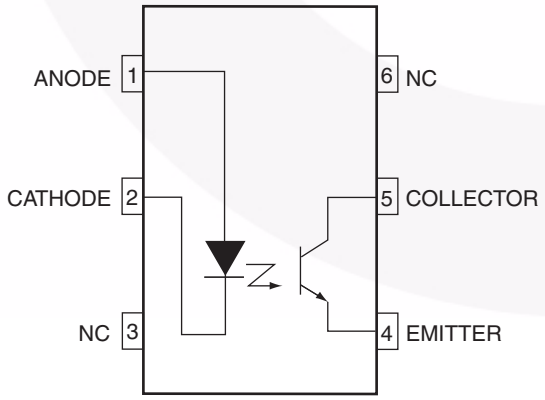

CNY17F1M/2M/3M/4M
MOC8106M/7M

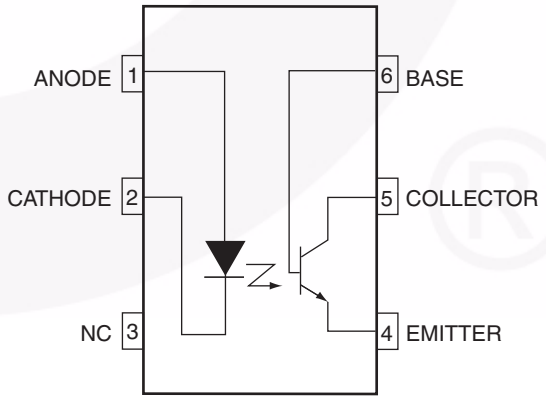

CNY171M/2M/3M/4M

©2006 Fairchild Semiconductor Corporation

Absolute Maximum Ratings

Stresses exceeding the absolute maximum ratings may damage the device. The device may not function or be operable above the recommended operating conditions and stressing the parts to these levels is not recommended. In addition, extended exposure to stresses above the recommended operating conditions may affect device reliability. The absolute maximum ratings are stress ratings only.

Symbol	Parameters	Value	Units
TOTAL DEVICE			
T_{STG}	Storage Temperature	-40 to +150	°C
T_{OPR}	Operating Temperature	-40 to +100	°C
T_J	Junction Temperature	-40 to +125	ºC
T_{SOL}	Lead Solder Temperature	260 for 10 sec	°C
P_D	Total Device Power Dissipation @ 25°C (LED plus detector)	250	mW
	Derate Linearly From 25°C	2.94	mW/°C
EMITTER			
I_F	Continuous Forward Current	60	mA
V_R	Reverse Voltage	6	V
I_F (pk)	Forward Current – Peak (1µs pulse, 300pps)	1.5	A
P_D	LED Power Dissipation 25°C Ambient	120	mW
	Derate Linearly From 25°C	1.41	mW/°C
DETECTOR			
I_C	Continuous Collector Current	50	mA
V_{CEO}	Collector-Emitter Voltage	70	V
V_{ECO}	Emitter Collector Voltage	7	V
P_D	Detector Power Dissipation @ 25°C	150	mW
	Derate Linearly from 25°C	1.76	mW/°C

Electrical Characteristics (T_A = 25°C Unless otherwise specified.)(1)

Individual Component Characteristics

Symbol	Parameters	Test Conditions	Device	Min.	Typ.	Max.	Units
EMITTER							
V_F	Input Forward Voltage	I_F = 60mA	CNY17XM, CNY17FXM	1.0	1.35	1.65	V
		I_F = 10mA	MOC810XM	1.0	1.15	1.50	
C_J	Capacitance	V_F = 0 V, f = 1.0MHz	All		18		pF
I_R	Reverse Leakage Current	V_R = 6V	All		0.001	10	µA
DETECTOR							
BV_{CEO}	Breakdown Voltage Collector to Emitter	I_C = 1.0mA, I_F = 0	All	70	100		V
BV_{CBO}	Collector to Base	I_C = 10µA, I_F = 0	CNY171M/2M/3M/4M	70	120		
BV_{ECO}	Emitter to Collector	I_E = 100µA, I_F = 0	All	7	10		
I_{CEO}	Leakage Current Collector to Emitter	V_{CE} = 10 V, I_F = 0	All		1	50	nA
I_{CBO}	Collector to Base	V_{CB} = 10 V, I_F = 0	CNY171M/2M/3M/4M			20	nA
C_{CE}	Capacitance Collector to Emitter	V_{CE} = 0, f = 1MHz	All		8		pF
C_{CB}	Collector to Base	V_{CB} = 0, f = 1MHz	CNY171M/2M/3M/4M		20		pF
C_{EB}	Emitter to Base	V_{EB} = 0, f = 1MHz	CNY171M/2M/3M/4M		10		pF

Isolation Characteristics

Symbol	Characteristic	Test Conditions	Min.	Typ.*	Max.	Units
V_{ISO}	Input-Output Isolation Voltage	f = 60 Hz, t = 1 sec., $I_{I-O} \leq 2\mu A$(4)	7500			Vac(pk)
R_{ISO}	Isolation Resistance	V_{I-O} = 500 VDC(4)	10^{11}			Ω
C_{ISO}	Isolation Capacitance	V_{I-O} = Ø, f = 1MHz(4)		0.2		pF

Transfer Characteristics (T_A = 25°C Unless otherwise specified.)(3)

Symbol	DC Characteristics		Test Conditions	Min.	Typ.*	Max.	Units
COUPLED							
(CTR)(2)	Output Collector Current	MOC8106M	I_F = 10mA, V_{CE} = 10V	50		150	%
		MOC8107M		100		300	
		CNY17F1M	I_F = 10mA, V_{CE} = 5V	40		80	
		CNY17F2M		63		125	
		CNY17F3M		100		200	
		CNY17F4M		160		320	
		CNY171M		40		80	
		CNY172M		63		125	
		CNY173M		100		200	
		CNY174M		160		320	
$V_{CE(sat)}$	Collector-Emitter Saturation Voltage	CNY17XM/FXM	I_C = 2.5mA, I_F = 10mA			0.4	V
		MOC8106M/7M	I_C = 500µA, I_F = 5.0mA				

*All typicals at T_A = 25°C

Electrical Characteristics (Continued) (T_A = 25°C Unless otherwise specified.)[1]

Transfer Characteristics (Continued)[3]

Symbol	AC Characteristics[4]		Test Conditions	Min.	Typ.*	Max.	Units
NON-SATURATED SWITCHING TIME							
t_{on}	Turn-On Time	All Devices	I_C = 2.0mA, V_{CC} = 10V, R_L = 100Ω		2	10	µs
t_{off}	Turn-Off Time	All Devices	I_C = 2.0mA, V_{CC} = 10V, R_L = 100Ω		3	10	µs
t_d	Delay Time	CNY17XM/XFM	I_F = 10mA, V_{CC} = 5V, R_L = 75Ω			5.6	µs
t_r	Rise Time	All Devices	I_C = 2.0mA, V_{CC} = 10V, R_L = 100Ω		1		µs
		CNY17XM/FXM	I_F = 10mA, V_{CC} = 5V, R_L = 75Ω			4.0	
t_s	Storage Time	CNY17XM/FXM	I_F = 10mA, V_{CC} = 5V, R_L = 75Ω			4.1	µs
t_f	Fall Time	All Devices	I_C = 2.0mA, V_{CC} = 10V, R_L = 100Ω		2		µs
		CNY17XM/FXM	I_F = 10mA, V_{CC} = 5V, R_L = 75Ω			3.5	
SATURATED SWITCHING TIMES							
t_{on}	Turn-on Time	CNY171M/F1M	I_F = 20mA, V_{CC} = 5V, R_L = 1kΩ			5.5	µs
		CNY172M/3M/4M CNY17F2M/F3M/F4M	I_F = 10mA, V_{CC} = 5V, R_L = 1kΩ			8.0	
t_r	Rise Time	CNY171M/F1M	I_F = 20mA, V_{CC} = 5V, R_L = 1kΩ			4.0	µs
		CNY172M/3M/4M CNY17F2M/F3M/F4M	I_F = 10mA, V_{CC} = 5V, R_L = 1kΩ			6.0	
t_d	Delay Time	CNY171M/F1M	I_F = 20mA, V_{CC} = 5V, R_L = 1kΩ			5.5	µs
		CNY172M/3M/4M CNY17F2M/F3M/F4M	I_F = 10mA, V_{CC} = 5V, R_L = 1kΩ			8.0	
t_{off}	Turn-off Time	CNY171M/F1M	I_F = 20mA, V_{CE} = 0.4V			34	µs
		CNY172M/3M/4M CNY17F2M/F3M/F4M	I_F = 10mA, V_{CE} = 0.4V			39	
t_f	Fall Time	CNY171M/F1M	I_F = 20mA, V_{CC} = 5V, R_L = 1kΩ			20.0	µs
		CNY172M/3M/4M CNY17F2M/F3M/F4M	I_F = 10mA, V_{CC} = 5V, R_L = 1kΩ			24.0	
t_s	Storage Time	CNY171M/F1M	I_F = 20mA, V_{CC} = 5V, R_L = 1kΩ			34.0	µs
		CNY172M/3M/4M CNY17F2M/F3M/F4M	I_F = 10mA, V_{CC} = 5V, R_L = 1kΩ			39.0	

*All typicals at T_A = 25°C

Notes:

1. Always design to the specified minimum/maximum electrical limits (where applicable).
2. Current Transfer Ratio (CTR) = I_C/I_F x 100%.
3. For test circuit setup and waveforms, refer to Figures 10 and 11.
4. For this test, Pins 1 and 2 are common, and Pins 4 are 5 are common.

Safety and Insulation Ratings

As per IEC 60747-5-2, this optocoupler is suitable for “safe electrical insulation” only within the safety limit data. Compliance with the safety ratings shall be ensured by means of protective circuits.

Symbol	Parameter	Min.	Typ.	Max.	Unit
	Installation Classifications per DIN VDE 0110/1.89 Table 1				
	For Rated Main Voltage < 150Vrms		I-IV		
	For Rated Main voltage < 300Vrms		I-IV		
	Climatic Classification		55/100/21		
	Pollution Degree (DIN VDE 0110/1.89)		2		
CTI	Comparative Tracking Index	175			
V_{PR}	Input to Output Test Voltage, Method b, V_{IORM} x 1.875 = V_{PR}, 100% Production Test with tm = 1 sec, Partial Discharge < 5pC	1594			V_{peak}
	Input to Output Test Voltage, Method a, V_{IORM} x 1.5 = V_{PR}, Type and Sample Test with tm = 60 sec, Partial Discharge < 5pC	1275			V_{peak}
V_{IORM}	Max. Working Insulation Voltage Vpeak	850			V_{peak}
V_{IOTM}	Highest Allowable Over Voltage Vpeak	6000			V_{peak}
	External Creepage	7			mm
	External Clearance	7			mm
	Insulation Thickness	0.5			mm
RIO	Insulation Resistance at Ts, V_{IO} = 500V	10^9			Ω

Typical Performance Characteristics

Fig. 1 Normalized CTR vs. Forward Current

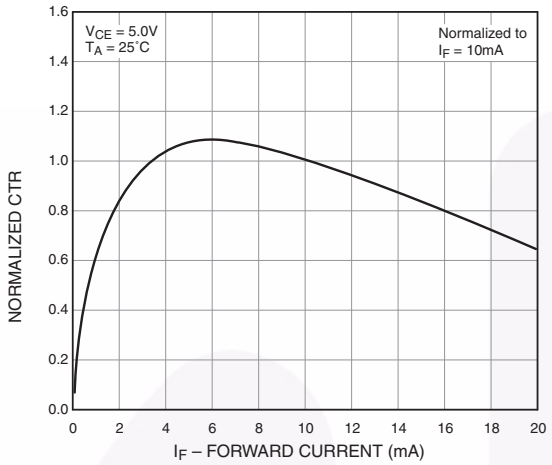

Fig. 2 Normalized CTR vs. Ambient Temperature

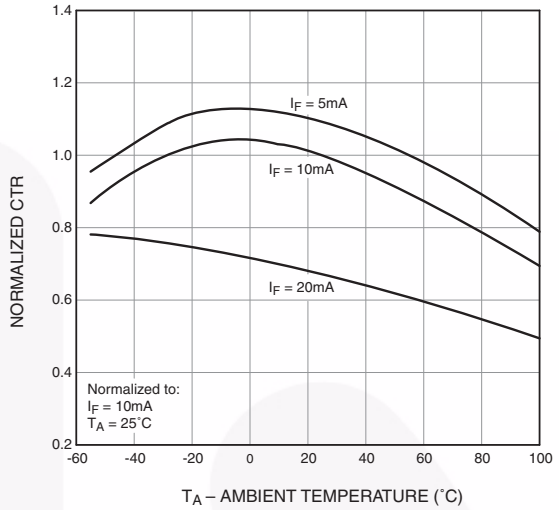

Fig. 3 CTR vs. RBE (Unsaturated)

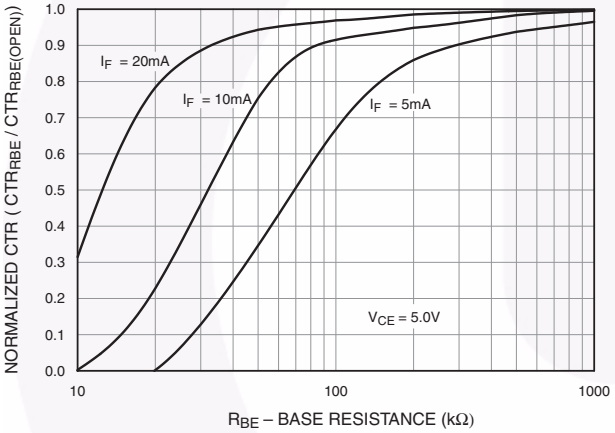

Fig. 4 CTR vs. RBE (Saturated)

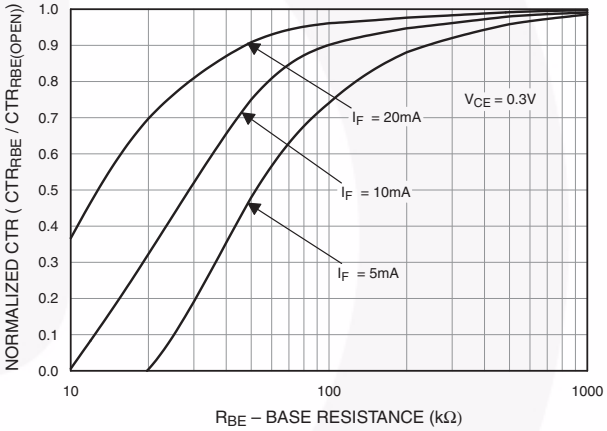

Fig. 5 Switching Speed vs. Load Resistor

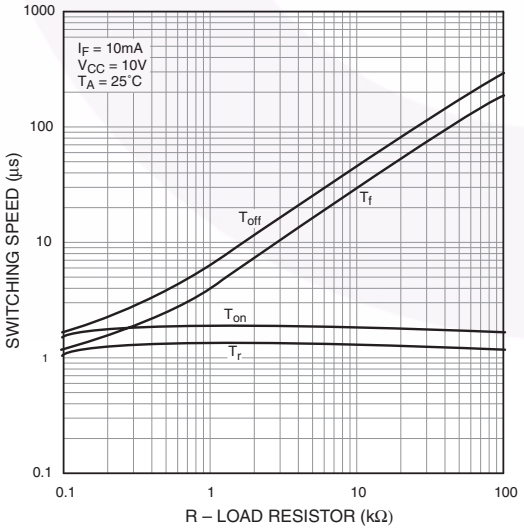

Fig. 6 Normalized t_{on} vs. R_{BE}

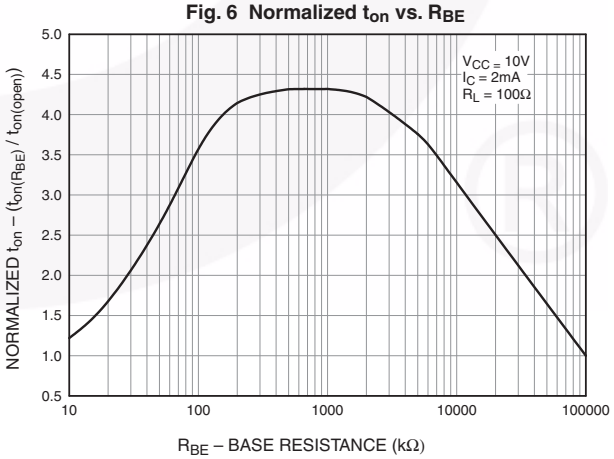

Typical Performance Characteristics (Continued)

Fig. 7 Normalized t_{off} vs. R_{BE}

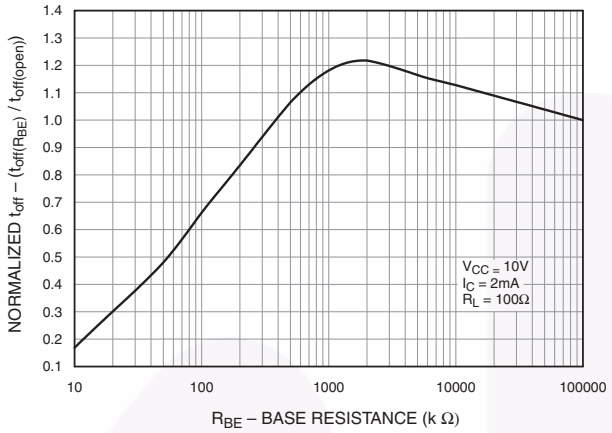

Fig. 8 LED Forward Voltage vs. Forward Current

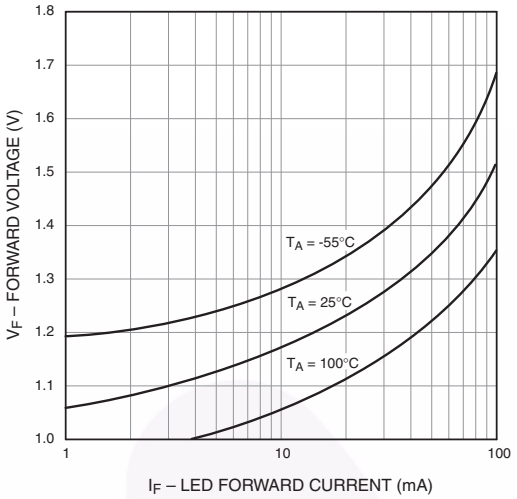

Fig. 9 Collector-Emitter Saturation Voltage vs Collector Current

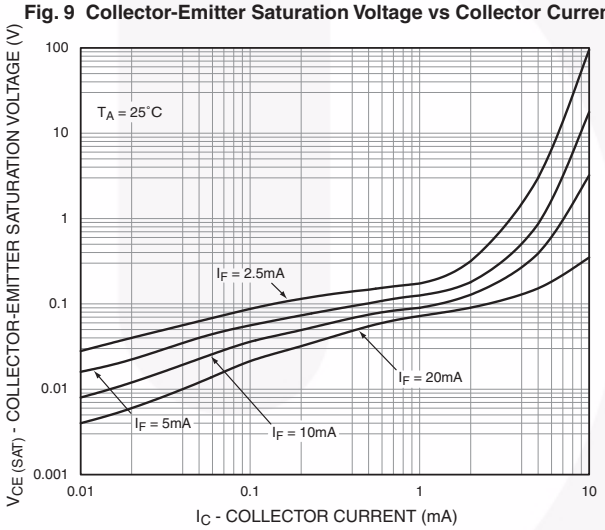

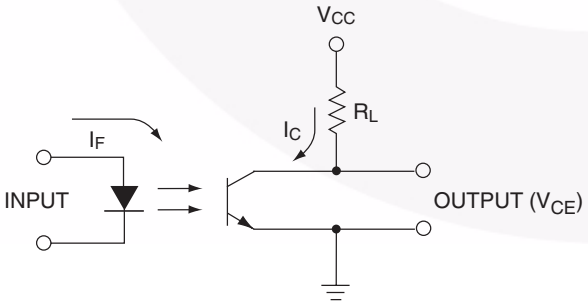

Figure 10. Switching Time Test Circuit

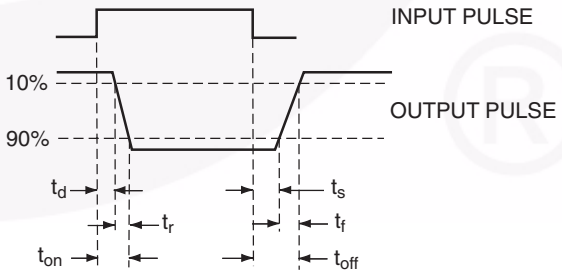

Figure 11. Switching Time Waveforms

Package Dimensions

Through Hole

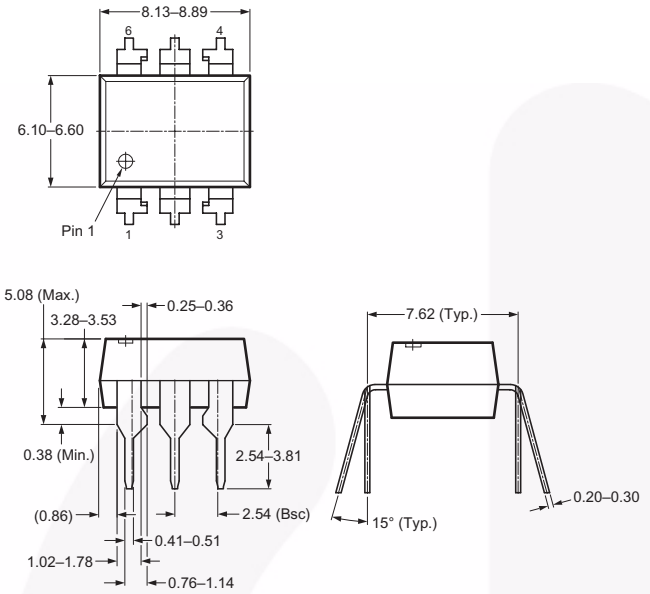

0.4" Lead Spacing

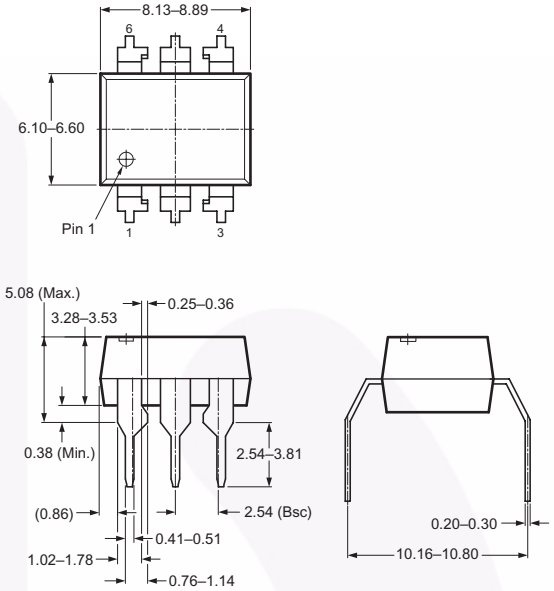

Surface Mount

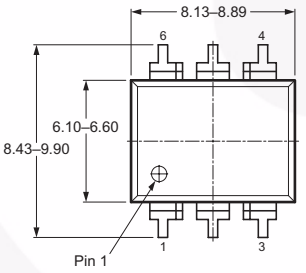

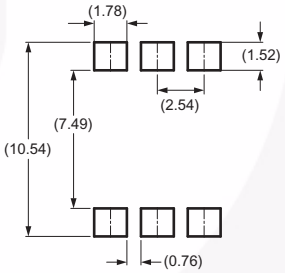

Rcommended Pad Layout

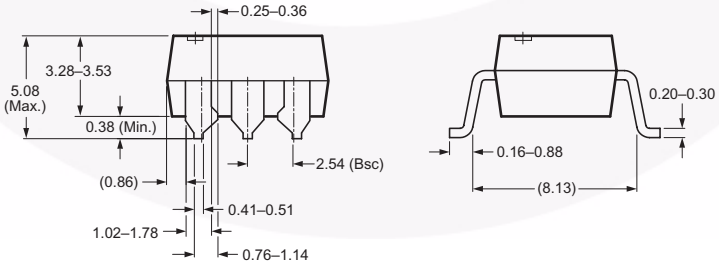

Note:
All dimensions in mm.

Ordering Information

Option	Order Entry Identifier (Example)	Description
No option	CNY171M	Standard Through Hole Device
S	CNY171SM	Surface Mount Lead Bend
SR2	CNY171SR2M	Surface Mount; Tape and Reel
T	CNY171TM	0.4" Lead Spacing
V	CNY171VM	IEC60747-5-2
TV	CNY171TVM	IEC60747-5-2, 0.4" Lead Spacing
SV	CNY171SVM	IEC60747-5-2, Surface Mount
SR2V	CNY171SR2VM	IEC60747-5-2, Surface Mount, Tape and Reel

Marking Information

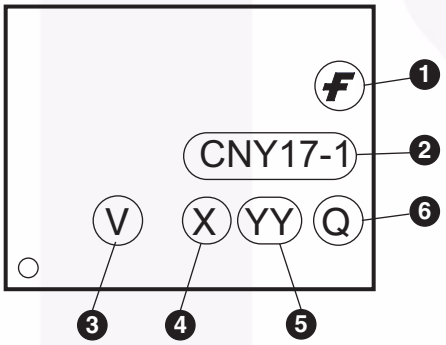

Definitions	
1	Fairchild logo
2	Device number
3	VDE mark (Note: Only appears on parts ordered with VDE option – See order entry table)
4	One digit year code, e.g., ‘7’
5	Two digit work week ranging from ‘01’ to ‘53’
6	Assembly package code

Carrier Tape Specification

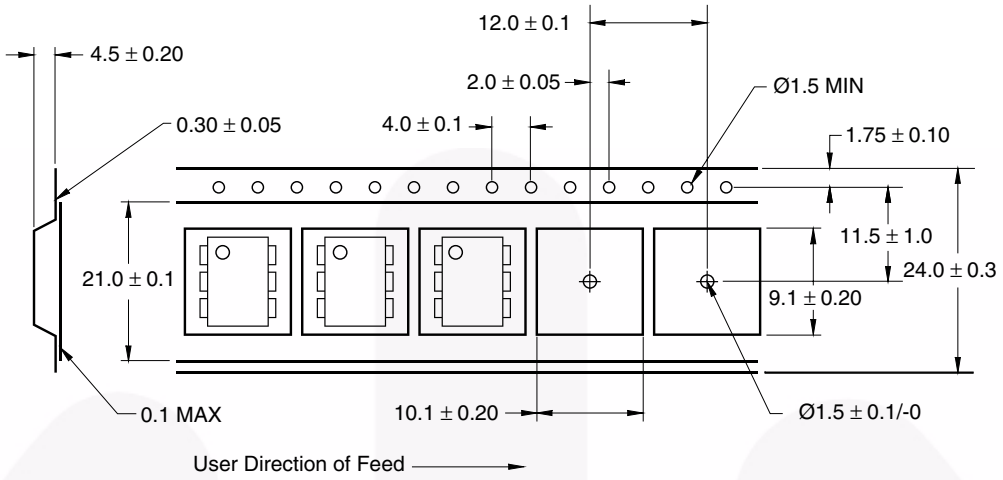

Reflow Profile

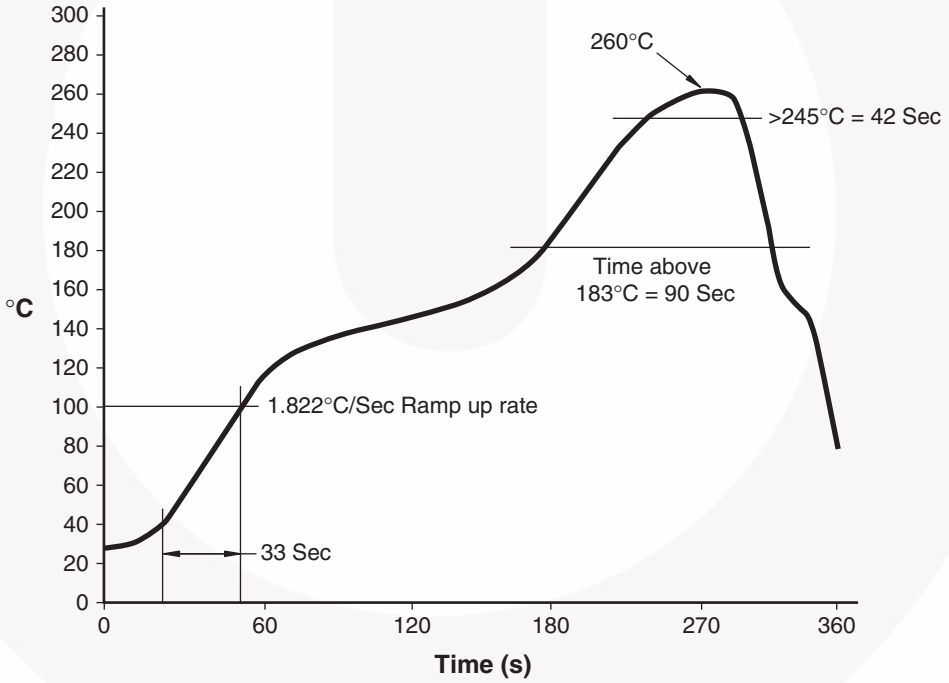

FAIRCHILD SEMICONDUCTOR®

TRADEMARKS

The following includes registered and unregistered trademarks and service marks, owned by Fairchild Semiconductor and/or its global subsidiaries, and is not intended to be an exhaustive list of all such trademarks.

Auto-SPM™
Build it Now™
CorePLUS™
CorePOWER™
CROSSVOLT™
CTL™
Current Transfer Logic™
EcoSPARK®
EfficentMax™
EZSWITCH™*
E2™*
F®
Fairchild®
Fairchild Semiconductor®
FACT Quiet Series™
FACT®
FAST®
FastvCore™
FETBench™
FlashWriter®*
FPS™
F-PFS™
FRFET®
Global Power Resource℠
Green FPS™
Green FPS™ e-Series™
G*max*™
GTO™
IntelliMAX™
ISOPLANAR™
MegaBuck™
MICROCOUPLER™
MicroFET™
MicroPak™
MillerDrive™
MotionMax™
Motion-SPM™
OPTOLOGIC®
OPTOPLANAR®
®
PDP SPM™
Power-SPM™
PowerTrench®
PowerXS™
Programmable Active Droop™
QFET®
QS™
Quiet Series™
RapidConfigure™
™
Saving our world, 1mW/W/kW at a time™
SmartMax™
SMART START™
SPM®
STEALTH™
SuperFET™
SuperSOT™-3
SuperSOT™-6
SuperSOT™-8
SupreMOS™
SyncFET™
Sync-Lock™
SYSTEM GENERAL ®*
The Power Franchise®
the power franchise
TinyBoost™
TinyBuck™
TinyLogic®
TINYOPTO™
TinyPower™
TinyPWM™
TinyWire™
TriFault Detect™
TRUECURRENT™*
µSerDes™
µSerDes™
UHC®
Ultra FRFET™
UniFET™
VCX™
VisualMax™
XS™

* Trademarks of System General Corporation, used under license by Fairchild Semiconductor.

DISCLAIMER

FAIRCHILD SEMICONDUCTOR RESERVES THE RIGHT TO MAKE CHANGES WITHOUT FURTHER NOTICE TO ANY PRODUCTS HEREIN TO IMPROVE RELIABILITY, FUNCTION, OR DESIGN. FAIRCHILD DOES NOT ASSUME ANY LIABILITY ARISING OUT OF THE APPLICATION OR USE OF ANY PRODUCT OR CIRCUIT DESCRIBED HEREIN; NEITHER DOES IT CONVEY ANY LICENSE UNDER ITS PATENT RIGHTS, NOR THE RIGHTS OF OTHERS. THESE SPECIFICATIONS DO NOT EXPAND THE TERMS OF FAIRCHILD'S WORLDWIDE TERMS AND CONDITIONS, SPECIFICALLY THE WARRANTY THEREIN, WHICH COVERS THESE PRODUCTS.

LIFE SUPPORT POLICY

FAIRCHILD'S PRODUCTS ARE NOT AUTHORIZED FOR USE AS CRITICAL COMPONENTS IN LIFE SUPPORT DEVICES OR SYSTEMS WITHOUT THE EXPRESS WRITTEN APPROVAL OF FAIRCHILD SEMICONDUCTOR CORPORATION.

As used herein:

1. Life support devices or systems are devices or systems which, (a) are intended for surgical implant into the body or (b) support or sustain life, and (c) whose failure to perform when properly used in accordance with instructions for use provided in the labeling, can be reasonably expected to result in a significant injury of the user.
2. A critical component in any component of a life support, device, or system whose failure to perform can be reasonably expected to cause the failure of the life support device or system, or to affect its safety or effectiveness.

ANTI-COUNTERFEITING POLICY

Fairchild Semiconductor Corporation's Anti-Counterfeiting Policy. Fairchild's Anti-Counterfeiting Policy is also stated on our external website, www.fairchildsemi.com, under Sales Support.

Counterfeiting of semiconductor parts is a growing problem in the industry. All manufacturers of semiconductor products are experiencing counterfeiting of their parts. Customers who inadvertently purchase counterfeit parts experience many problems such as loss of brand reputation, substandard performance, failed applications, and increased cost of production and manufacturing delays. Fairchild is taking strong measures to protect ourselves and our customers from the proliferation of counterfeit parts. Fairchild strongly encourages customers to purchase Fairchild parts either directly from Fairchild or from Authorized Fairchild Distributors who are listed by country on our web page cited above. Products customers buy either from Fairchild directly or from Authorized Fairchild Distributors are genuine parts, have full traceability, meet Fairchild's quality standards for handling and storage and provide access to Fairchild's full range of up-to-date technical and product information. Fairchild and our Authorized Distributors will stand behind all warranties and will appropriately address any warranty issues that may arise. Fairchild will not provide any warranty coverage or other assistance for parts bought from Unauthorized Sources. Fairchild is committed to combat this global problem and encourage our customers to do their part in stopping this practice by buying direct or from authorized distributors.

PRODUCT STATUS DEFINITIONS

Definition of Terms

Datasheet Identification	Product Status	Definition
Advance Information	Formative / In Design	Datasheet contains the design specifications for product development. Specifications may change in any manner without notice.
Preliminary	First Production	Datasheet contains preliminary data; supplementary data will be published at a later date. Fairchild Semiconductor reserves the right to make changes at any time without notice to improve design.
No Identification Needed	Full Production	Datasheet contains final specifications. Fairchild Semiconductor reserves the right to make changes at any time without notice to improve the design.
Obsolete	Not In Production	Datasheet contains specifications on a product that is discontinued by Fairchild Semiconductor. The datasheet is for reference information only.

Rev. I40