MOTOROLA
SEMICONDUCTOR TECHNICAL DATA

Order this document
by CA902/D

The RF Line
VHF/UHF CATV Amplifiers

. . . designed for broadband applications requiring low–distortion and high output capability. Specifically intended for CATV/MATV market requirements. These amplifiers feature ion–implanted arsenic emitter transistors and an all gold metal system.

- Specified Characteristics at T_C = 25°C; V_{CC} = 28 V
  - Frequency Range — 40 to 860 MHz
  - Power Gain — 17 dB Typ @ f = 40 MHz
  - Noise Figure — 7.0 dB Typ @ f = 500 MHz
  - 123 dBµV DIN45004B @ 860 MHz
- All Gold Metallization for Improved Reliability
- Superior Gain, Return Loss and DC Current Stability with Temperature

CA902
CA902A

17 dB
40–860 MHz
VHF/UHF
CATV/MATV
AMPLIFIERS

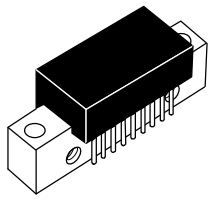

CASE 714P–03, STYLES 2, 3 (CA)

MAXIMUM RATINGS (T_A = 25°C unless otherwise noted)

Rating	Symbol	Value	Unit
Supply Voltage	V_{CC}	30	V
RF Input Power Per Tone	P_{in}	+17	dBm
Storage Temperature	T_{stg}	– 40 to +125	°C
Operating Case Temperature Range	T_C	– 20 to +100	°C

ELECTRICAL CHARACTERISTICS (T_C = 25°C, V_{CC} = 28 V, 75 Ohm System)

Characteristic	Symbol	Min	Typ	Max	Unit
Supply Current	I_{DC}	—	400	450	mA
Power Gain (f = 40 MHz)	PG	16.5	17	17.5	dB
Bandwidth	BW	40	—	860	MHz
Slope (40–860 MHz)	S	0.2	0.8	1.4	dB
Gain Flatness	FL	—	—	±0.5	dB
Input/Output Return Loss f = 40 – 100 MHz f = 100 – 800 MHz f = 800 – 860 MHz	IRL/ORL	20 15 10	— 17 12	— — —	dB
Second Order Intermodulation Distortion (V_o = + 50 dBmV/ch.) CA902 CA902A	IMD_2	— —	— —	–63 –67	dB
DIN45004B (See Figure 1) f = 40 – 400 MHz f = 400 – 860 MHz	DIN	124 123	— —	— —	dBµV
Noise Figure f = 500 MHz f = 860 MHz	NF	— —	7.0 8.0	8.5 9.5	dB

MOTOROLA

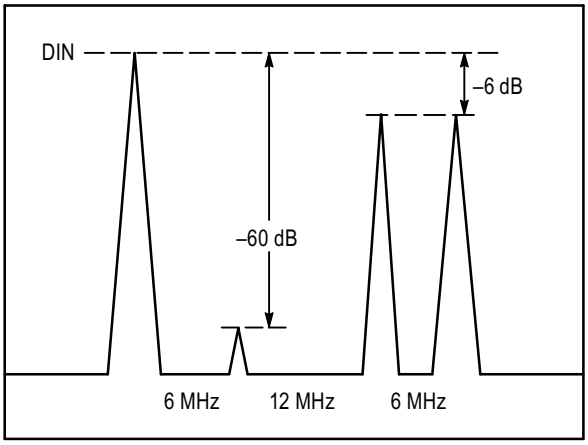

Figure 1. DIN45004B Test

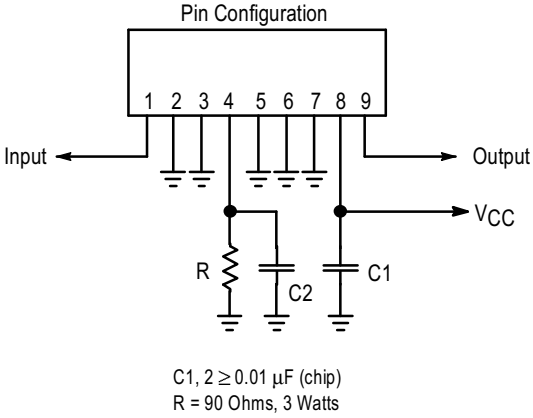

Figure 2. External Connections
Case 714P–03, Style 2

PACKAGE DIMENSIONS

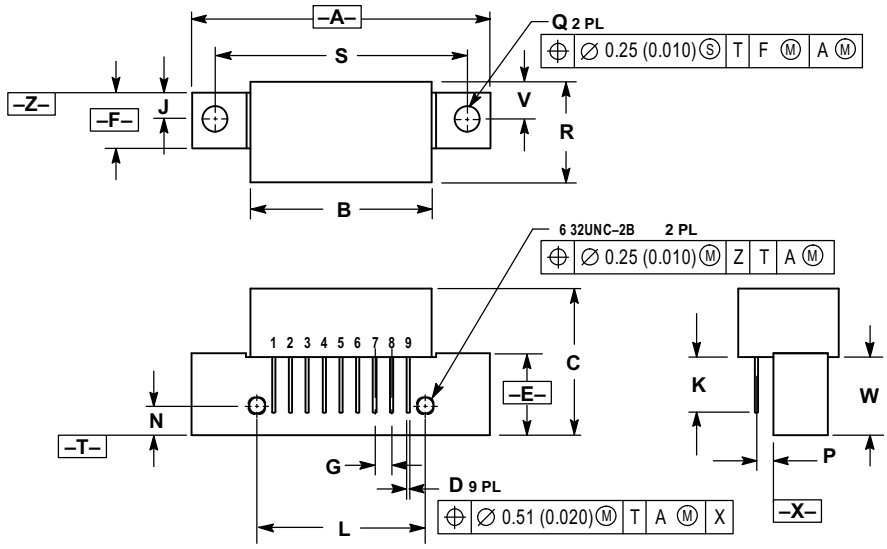

NOTES:
1. DIMENSIONING AND TOLERANCING PER ANSI Y14.5M, 1982.
2. CONTROLLING DIMENSION: INCH.

	INCHES		MILLIMETERS	
DIM	MIN	MAX	MIN	MAX
A	—	1.775	—	45.08
B	—	1.085	—	27.56
C	—	0.870	—	22.10
D	0.018	0.022	0.46	0.56
E	0.465	0.510	11.81	12.95
F	0.300	0.325	7.62	8.25
G	0.100 BSC		2.54 BSC	
J	0.156 BSC		3.96 BSC	
K	0.330	0.370	8.38	9.40
L	1.000 BSC		25.40 BSC	
N	0.165 BSC		4.19 BSC	
P	0.100 BSC		2.54 BSC	
Q	0.148	0.168	3.76	4.27
R	—	0.595	—	15.11
S	1.500 BSC		38.10 BSC	
V	0.209	0.239	5.31	6.07
W	0.425	—	10.80	—

STYLE 2:
PIN 1. RF INPUT
2. GROUND
3. GROUND
4. RESISTOR-GROUND
5. GROUND
6. GROUND
7. GROUND
8. V_{CC} 1
9. RF OUTPUT

STYLE 3:
PIN 1. RF INPUT
2. GROUND
3. GROUND
4. V_{CC} 1
5. GROUND
6. GROUND
7. GROUND
8. V_{CC} 2
9. RF OUTPUT

CASE 714P–03
ISSUE B

Literature Distribution Centers:
USA: Motorola Literature Distribution; P.O. Box 20912; Phoenix, Arizona 85036.
EUROPE: Motorola Ltd.; European Literature Centre; 88 Tanners Drive, Blakelands, Milton Keynes, MK14 5BP, England.
JAPAN: Nippon Motorola Ltd.; 4-32-1, Nishi-Gotanda, Shinagawa-ku, Tokyo 141, Japan.
ASIA PACIFIC: Motorola Semiconductors H.K. Ltd.; Silicon Harbour Center, No. 2 Dai King Street, Tai Po Industrial Estate, Tai Po, N.T., Hong Kong.

MOTOROLA

CA902/D