Rectifier diodes ultrafast, rugged

BYW29E series

FEATURES

- Low forward volt drop
- Fast switching
- Soft recovery characteristic
- Reverse surge capability
- High thermal cycling performance
- Low thermal resistance

SYMBOL

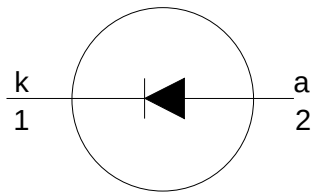

QUICK REFERENCE DATA

V_R = 150 V/ 200 V

$V_F \leq 0.895$ V

$I_{F(AV)}$ = 8 A

$I_{RRM} \leq 0.2$ A

$t_{rr} \leq 25$ ns

GENERAL DESCRIPTION

Ultra-fast, epitaxial rectifier diodes intended for use as output rectifiers in high frequency switched mode power supplies.

The BYW29E series is supplied in the conventional leaded SOD59 (TO220AC) package.

PINNING

PIN	DESCRIPTION
1	cathode
2	anode
tab	cathode

SOD59 (TO220AC)

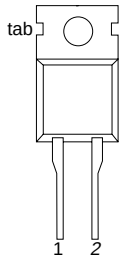

LIMITING VALUES

Limiting values in accordance with the Absolute Maximum System (IEC 134)

SYMBOL	PARAMETER	CONDITIONS	MIN.	MAX.		UNIT
		BYW29E		**-150**	**-200**	
V_{RRM}	Peak repetitive reverse voltage		-	150	200	V
V_{RWM}	Working peak reverse voltage		-	150	200	V
V_R	Continuous reverse voltage		-	150	200	V
$I_{F(AV)}$	Average rectified forward current	square wave; δ = 0.5; $T_{mb} \leq 128$ ˚C	-	8		A
I_{FRM}	Repetitive peak forward current	square wave; δ = 0.5; $T_{mb} \leq 128$ ˚C	-	16		A
I_{FSM}	Non-repetitive peak forward current	t = 10 ms	-	80		A
		t = 8.3 ms	-	88		A
		sinusoidal; with reapplied $V_{RRM(max)}$				
I_{RRM}	Peak repetitive reverse surge current	t_p = 2 µs; δ = 0.001	-	0.2		A
I_{RSM}	Peak non-repetitive reverse surge current	t_p = 100 µs	-	0.2		A
T_j	Operating junction temperature		-	150		˚C
T_{stg}	Storage temperature		- 40	150		˚C

ESD LIMITING VALUE

SYMBOL	PARAMETER	CONDITIONS	MIN.	MAX.	UNIT
V_C	Electrostatic discharge capacitor voltage	Human body model; C = 250 pF; R = 1.5 kΩ	-	8	kV

THERMAL RESISTANCES

SYMBOL	PARAMETER	CONDITIONS	MIN.	TYP.	MAX.	UNIT
$R_{th\ j\text{-}mb}$	Thermal resistance junction to mounting base		-	-	2.7	K/W
$R_{th\ j\text{-}a}$	Thermal resistance junction to ambient	in free air	-	60	-	K/W

ELECTRICAL CHARACTERISTICS

T_j = 25 ˚C unless otherwise specified

SYMBOL	PARAMETER	CONDITIONS	MIN.	TYP.	MAX.	UNIT
V_F	Forward voltage	I_F = 8 A; T_j = 150˚C	-	0.8	0.895	V
		I_F = 8 A	-	0.92	1.05	V
		I_F = 20 A	-	1.1	1.3	V
I_R	Reverse current	$V_R = V_{RWM}$	-	2	10	µA
		$V_R = V_{RWM}$; T_j = 100˚C	-	0.2	0.6	mA
Q_{rr}	Reverse recovered charge	I_F = 2 A; $V_R \geq$ 30 V; $-dI_F/dt$ = 20 A/µs	-	4	11	nC
t_{rr1}	Reverse recovery time	I_F = 1 A; $V_R \geq$ 30 V; $-dI_F/dt$ = 100 A/µs		20	25	ns
t_{rr2}	Reverse recovery time	I_F = 0.5 A to I_R = 1 A; I_{rec} = 0.25 A	-	15	20	ns
V_{fr}	Forward recovery voltage	I_F = 1 A; dI_F/dt = 10 A/µs	-	1	-	V

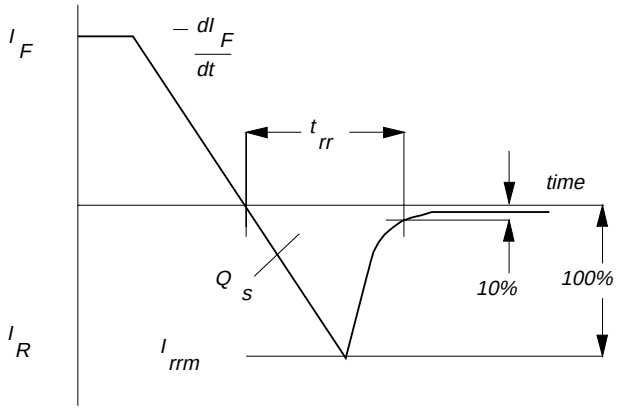

Fig.1. Definition of t_{rr1}, Q_s and I_{rrm}

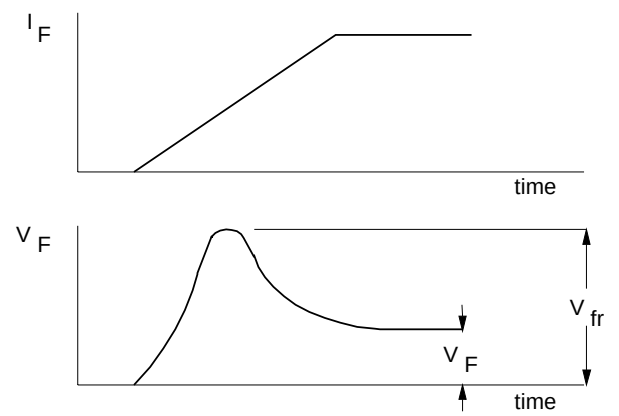

Fig.2. Definition of V_{fr}

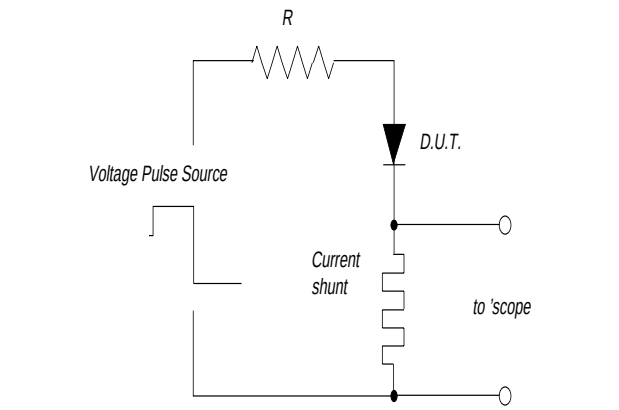

Fig.3. Circuit schematic for t_{rr2}

Fig.4. Definition of t_{rr2}

Fig.5. Maximum forward dissipation $P_F = f(I_{F(AV)})$; square current waveform where $I_{F(AV)} = I_{F(RMS)} \times \sqrt{D}$.

Fig.6. Maximum forward dissipation $P_F = f(I_{F(AV)})$; sinusoidal current waveform where a = form factor = $I_{F(RMS)} / I_{F(AV)}$.

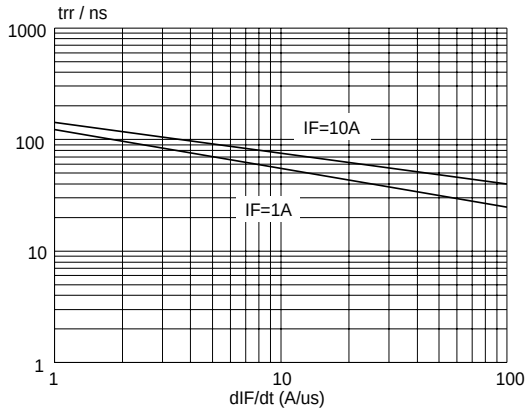

Fig.7. Maximum t_{rr} at T_j = 25 ˚C.

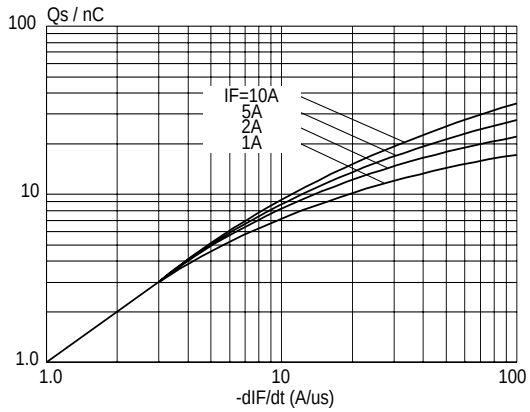

Fig.10. Maximum Q_s at T_j = 25 ˚C.

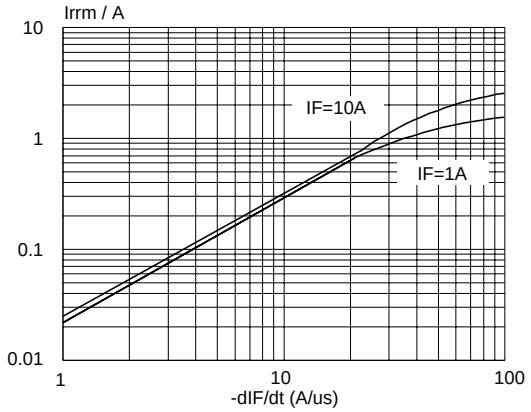

Fig.8. Maximum I_{rrm} at T_j = 25 ˚C.

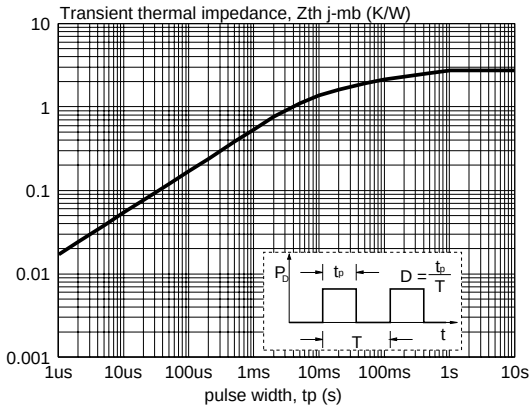

Fig.11. Transient thermal impedance; $Z_{th\ j\text{-}mb} = f(t_p)$.

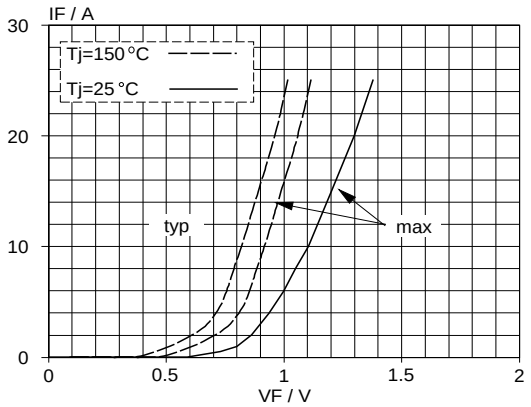

Fig.9. Typical and maximum forward characteristic $I_F = f(V_F)$; parameter T_j

MECHANICAL DATA

Dimensions in mm

Net Mass: 2 g

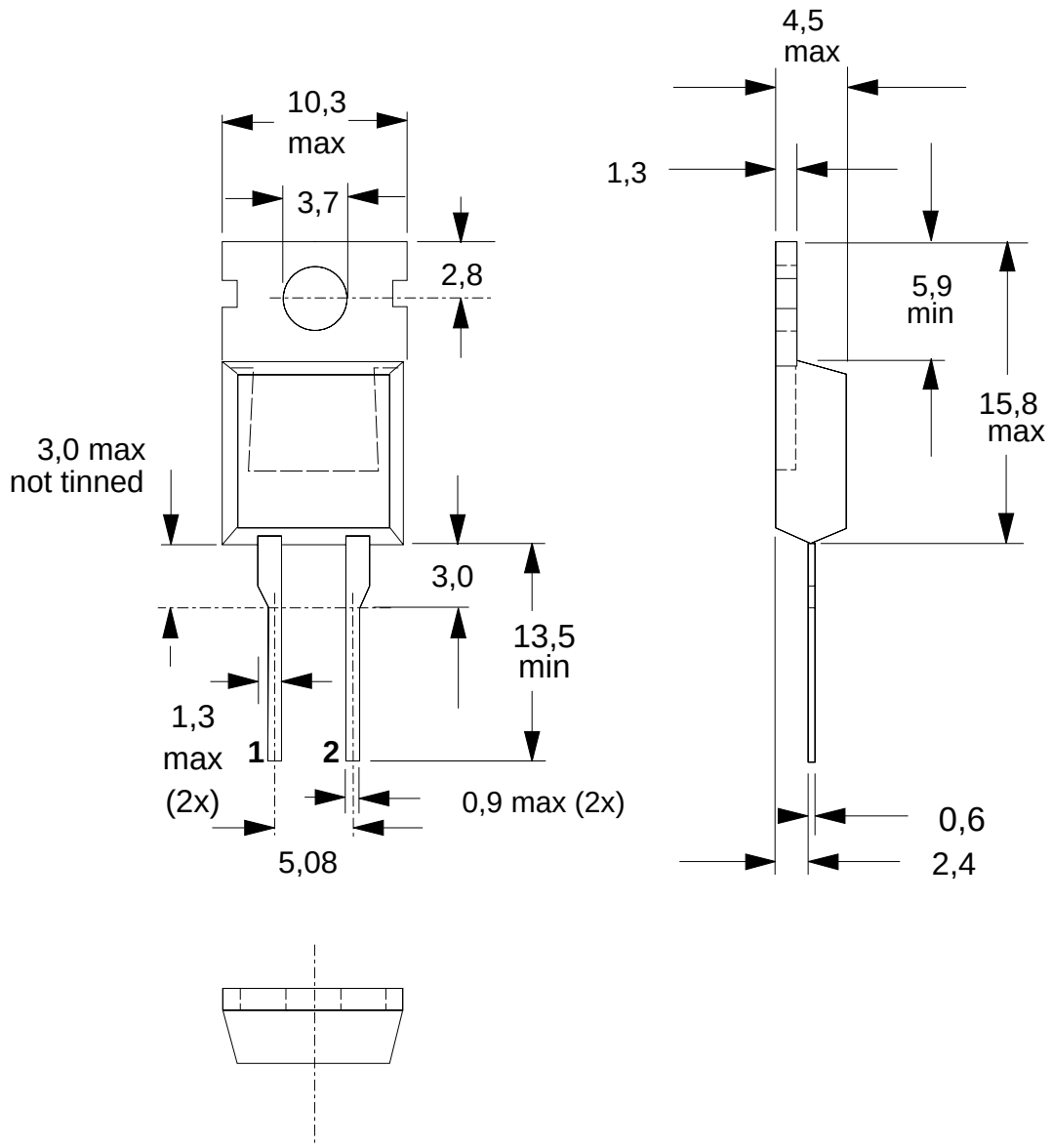

Fig.12. TO220AC; pin 1 connected to mounting base.

Notes
1. Refer to mounting instructions for TO220 envelopes.
2. Epoxy meets UL94 V0 at 1/8".

DEFINITIONS

Data sheet status	
Objective specification	This data sheet contains target or goal specifications for product development.
Preliminary specification	This data sheet contains preliminary data; supplementary data may be published later.
Product specification	This data sheet contains final product specifications.
Limiting values	
Limiting values are given in accordance with the Absolute Maximum Rating System (IEC 134). Stress above one or more of the limiting values may cause permanent damage to the device. These are stress ratings only and operation of the device at these or at any other conditions above those given in the Characteristics sections of this specification is not implied. Exposure to limiting values for extended periods may affect device reliability.	
Application information	
Where application information is given, it is advisory and does not form part of the specification.	
© **Philips Electronics N.V. 1998**	
All rights are reserved. Reproduction in whole or in part is prohibited without the prior written consent of the copyright owner.	
The information presented in this document does not form part of any quotation or contract, it is believed to be accurate and reliable and may be changed without notice. No liability will be accepted by the publisher for any consequence of its use. Publication thereof does not convey nor imply any license under patent or other industrial or intellectual property rights.	

LIFE SUPPORT APPLICATIONS

These products are not designed for use in life support appliances, devices or systems where malfunction of these products can be reasonably expected to result in personal injury. Philips customers using or selling these products for use in such applications do so at their own risk and agree to fully indemnify Philips for any damages resulting from such improper use or sale.