Silicon diffused power transistors — BUX86; BUX87

High-voltage, high-speed, glass-passivated npn power transistors in TO-126 envelopes, for use in converters, inverters, switching regulators, motor control systems and switching applications.

QUICK REFERENCE DATA

			BUX86	BUX87	
Collector-emitter voltage (peak value; $V_B = 0$)	V_{CESM}	max.	800	1000	V
Collector-emitter voltage (open base)	V_{CEO}	max.	400	450	V
Collector-emitter saturation voltage	V_{CEsat}	max.	1		V
Collector current (DC)	I_C	max.	0,5		A
Collector current (peak value)	I_{CM}	max.	1		A
Total power dissipation up to T_{mb} = 60 °C	P_{tot}	max.	20		W
Fall time	t_f	typ.	0,4		μs

MECHANICAL DATA

Dimensions in mm

Fig. 1 TO-126.

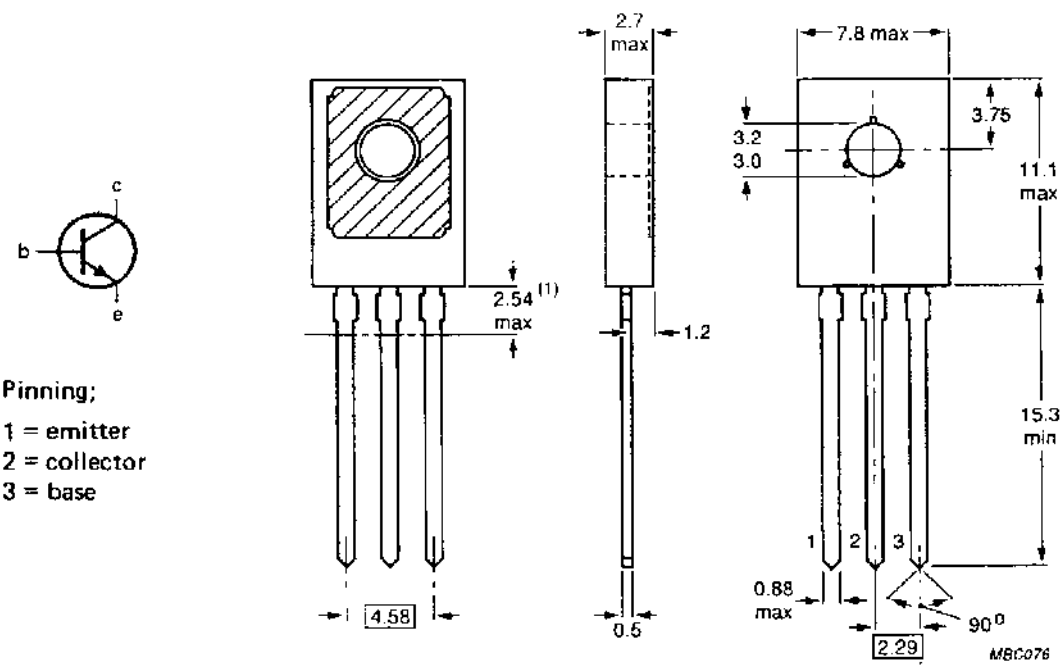

Pinning;

1 = emitter
2 = collector
3 = base

Collector connected to metal part of mounting surface.

RATINGS Limiting values in accordance with the Absolute Maximum System (IEC 134)

			BUX86	BUX87	
Collector-emitter voltage (peak value; $V_{BE} = 0$)	V_{CESM}	max.	800	1000	V
Collector-emitter voltage (open base)	V_{CEO}	max.	400	450	V
Emitter-base voltage (open collector)	V_{EBO}	max.	5	5	V
Collector current (DC)	I_C	max.	0,5		A
Collector current (peak value) $t_p = 2$ ms	I_{CM}	max.	1		A
Base current (DC)	I_B	max.	0,2		A
Base current (peak value)	I_{BM}	max.	0,3		A
Reverse base current (peak value) (note 1)	$-I_{BM}$	max.	0,3		A
Total power dissipation up to $T_{mb} = 60$ °C	P_{tot}	max.	20		W
Storage temperature range	T_{stg}		−65 to + 150		°C
Junction temperature	T_j	max.	150		°C

THERMAL RESISTANCE

From junction to mounting base	$R_{th\,j\text{-}mb}$	=	4,5	K/W
From junction to ambient in free air	$R_{th\,j\text{-}a}$	=	100	K/W

CHARACTERISTICS $T_j = 25$ °C unless otherwise specified

Collector-cut-off current (note 2)				
$V_{CE} = V_{CESMmax}$; $V_{BE} = 0$	I_{CES}	max.	100	μA
$V_{CE} = V_{CESMmax}$; $V_{BE} = 0$; $T_j = 125$ °C	I_{CES}	max.	1	mA
DC current gain				
$I_C = 50$ mA; $V_{CE} = 5$ V	h_{FE}	min.	26	
	h_{FE}	typ.	50	
	h_{FE}	max.	125	

Notes

1. Turn-off current.
2. Measured with a half-sinewave voltage (curve tracer).

Emitter cut-off current					
$I_C = 0$; $V_{EB} = 5$ V	I_{EBO}	max.		1	mA
Saturation voltage					
$I_C = 0{,}1$ A; $I_B = 10$ mA	V_{CEsat}	max.		0,8	V
$I_C = 0{,}2$ A; $I_B = 20$ mA	V_{CEsat}	max.		1,0	V
$I_C = 0{,}2$ A; $I_B = 20$ mA	V_{BEsat}	max.		1,0	V
Collector-emitter sustaining voltages			BUX86	BUX87	
$I_C = 100$ mA; $I_{Boff} = 0$; L = 25 mH	$V_{CEOsust}$	min.	400	450	V

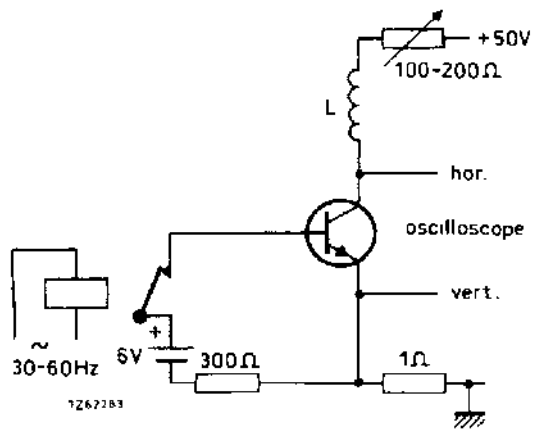

Fig. 2 Test circuit for $V_{CEOsust}$.

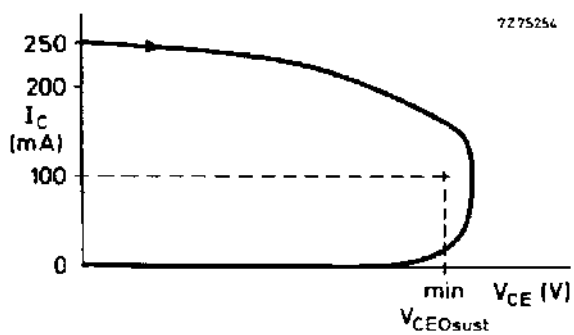

Fig. 3 Oscilloscope display for sustaining voltage.

CHARACTERISTICS (continued)

Transition frequency at f = 1 MHz				
I_C = 50 mA; V_{CE} = 10 V	f_T	typ	20	MHz
Switching times				
I_{Con} = 0,2 A; V_{CC} = 250 V				
I_{Bon} = 20 mA; $-I_{Boff}$ = 40 mA				
Turn-on time	t_{on}	typ	0,25	μs
		max.	0,5	μs
Turn-off: Storage time	t_s	typ	2	μs
		max.	3,5	μs
Fall time	t_f	typ	0,4	μs
Fall time, T_{mb} = 95 °C	t_f	max.	1,3	μs

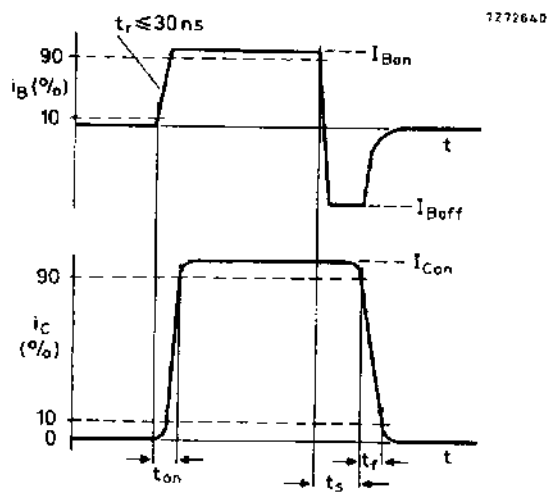

Fig. 4 Switching times waveforms with resistive load.

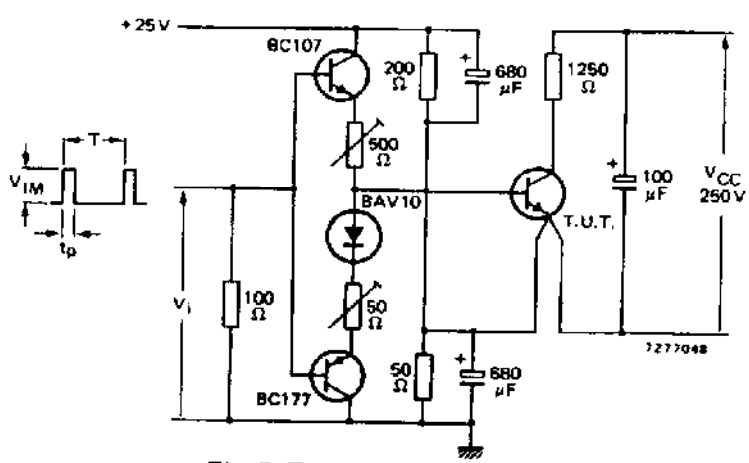

t_p = 20 μs
T = 2 ms
V_{IM} = 15 V

Fig. 5 Test circuit resistive load.

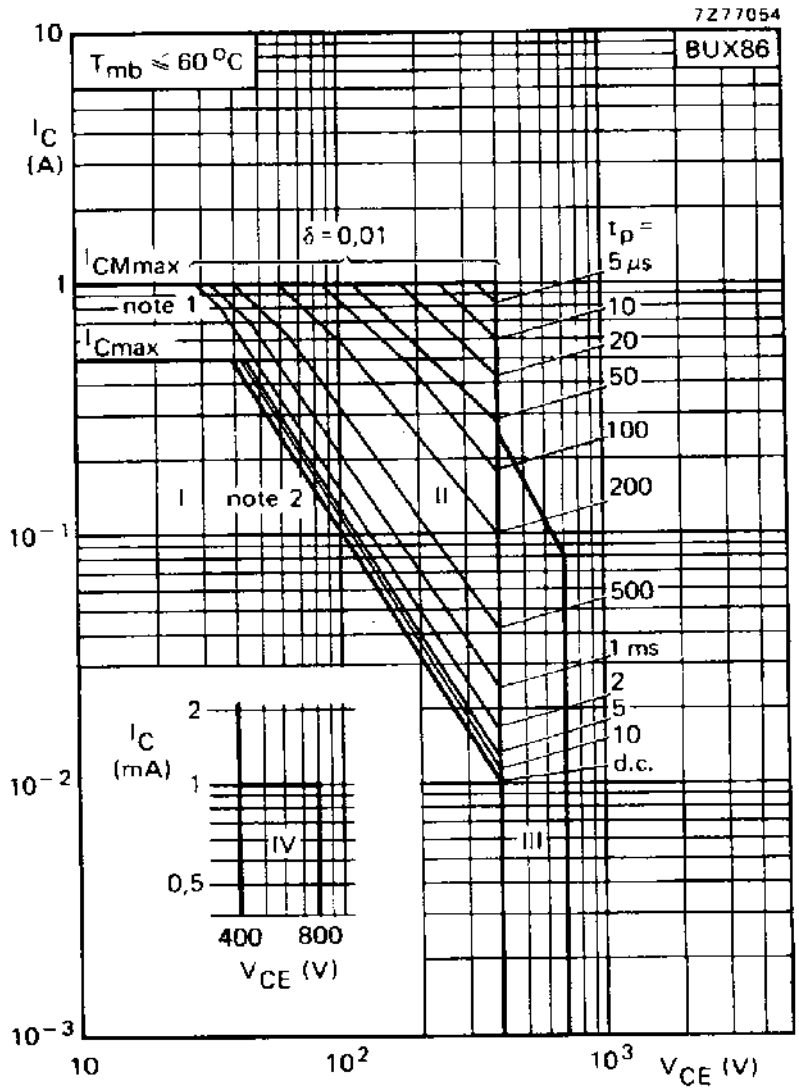

1. $P_{peak\ max}$ lines.
2. Second-breakdown limits.

I Region of permissible DC operation

II Permissible extension for repetitive pulse operation

III Area of permissible operation during turn-on in single-transistor converters, provided $R_{BE} \leq 100\,\Omega$ and $t_p \leq 0,6\,\mu s$

IV Repetitive pulse operation in this region is permissible, provided $V_{BE} \leq 0$ and $t_p \leq 2$ ms

Fig. 6 Safe operating area.

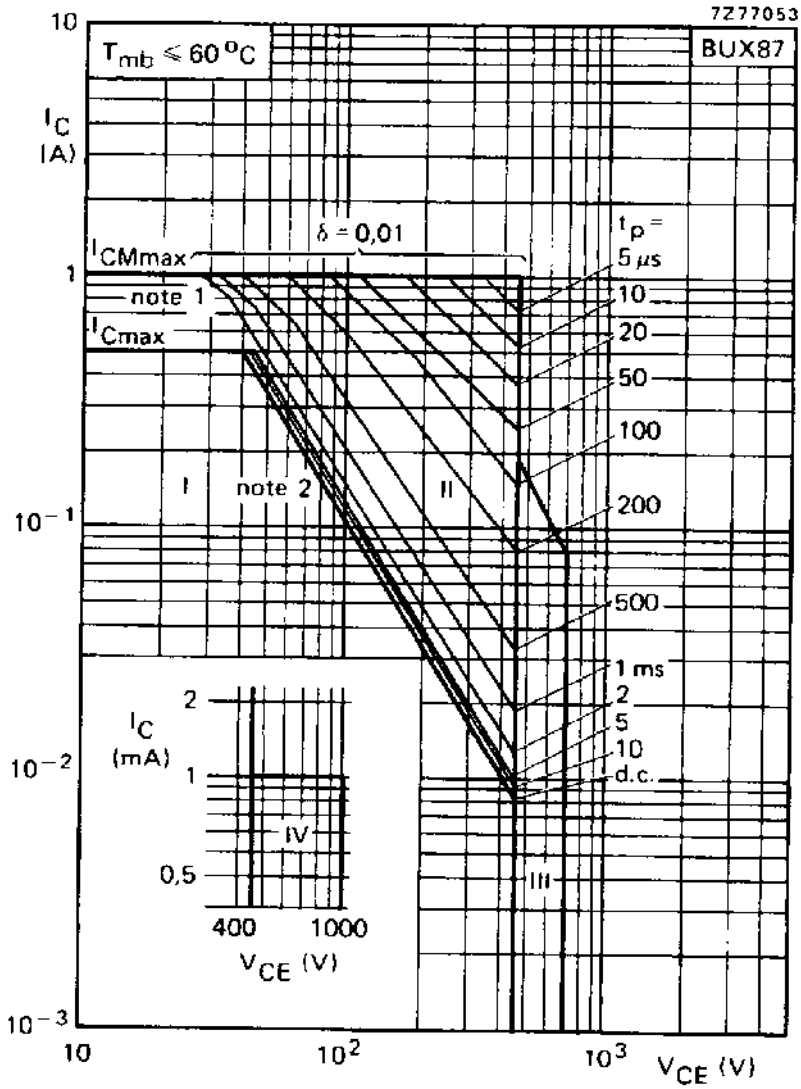

1. $P_{peak\ max}$ lines.
2. Second-breakdown limits.

I Region of permissible DC operation

II Permissible extension for repetitive pulse operation

III Area of permissible operation during turn-on in single-transistor converters, provided $R_{BE} \leq 100\ \Omega$ an $t_p \leq 0{,}6\ \mu s$

IV Repetitive pulse operation in this region is permissible provided $V_{BE} \leq 0$ and $t_p \leq 2$ ms

Fig. 7 Safe operating area.

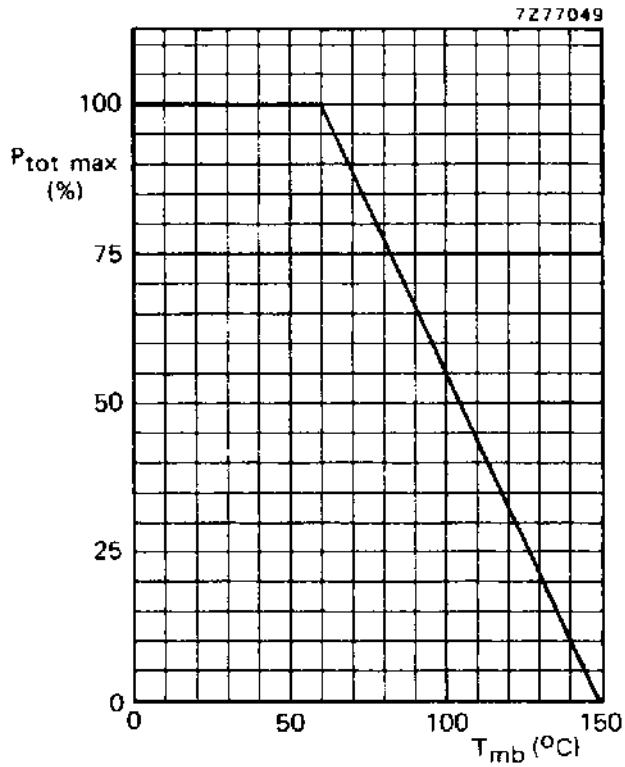

Fig. 8 Power derating curve.

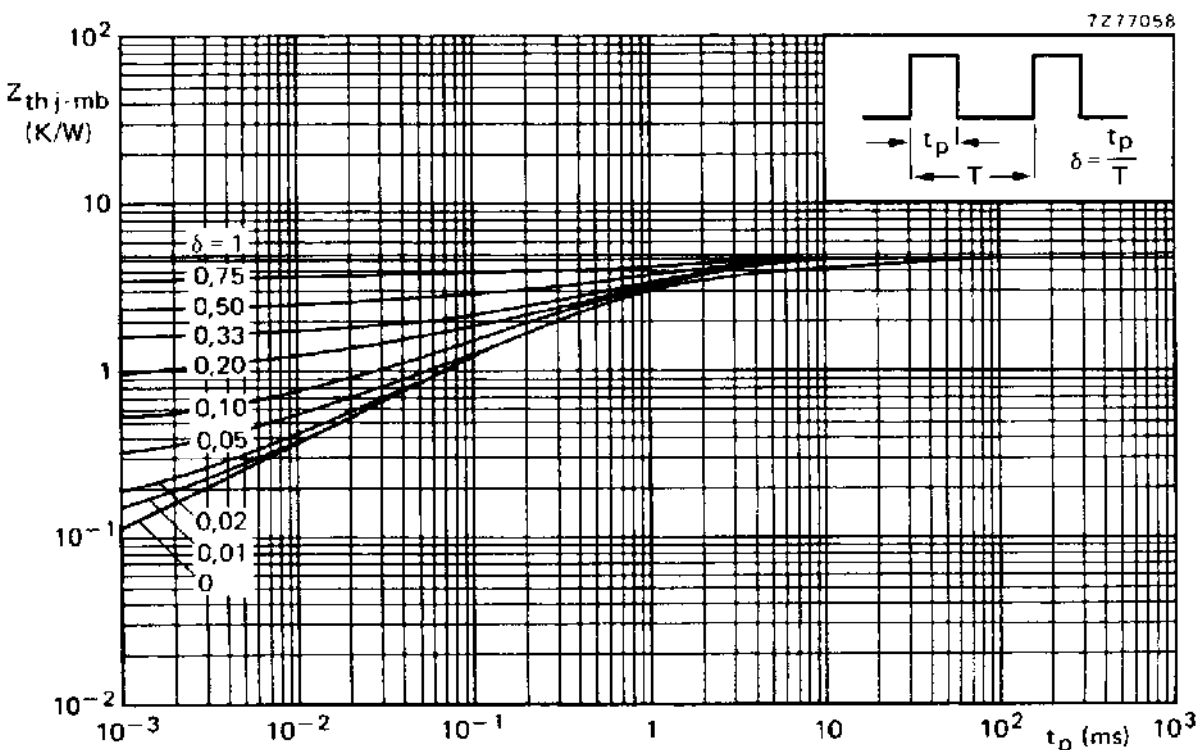

Fig. 9 Pulse power rating chart.

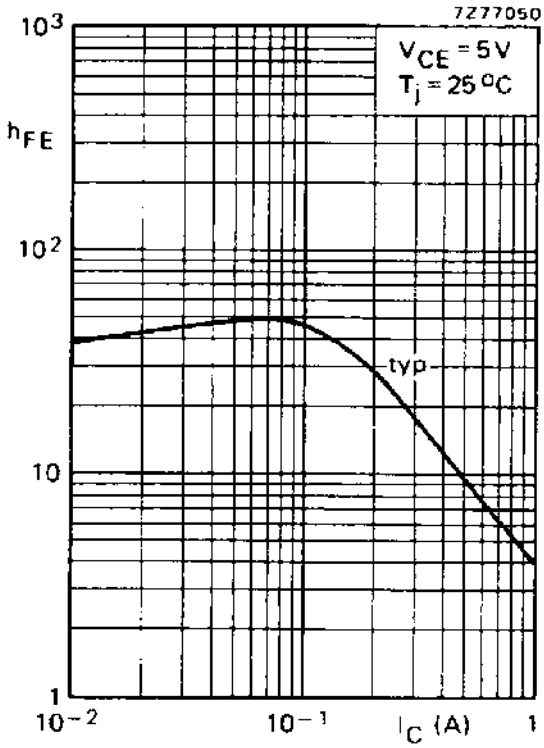

Fig. 10 Typical DC current gain.

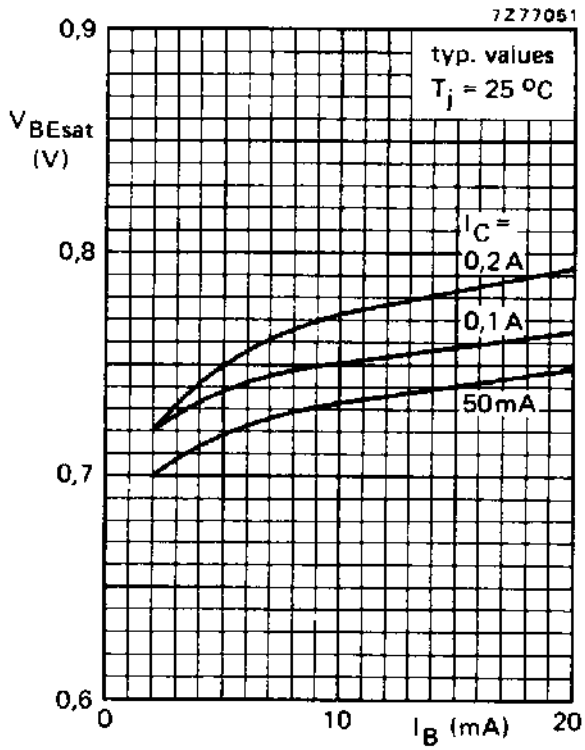

Fig. 11 Typical base-emitter voltage.

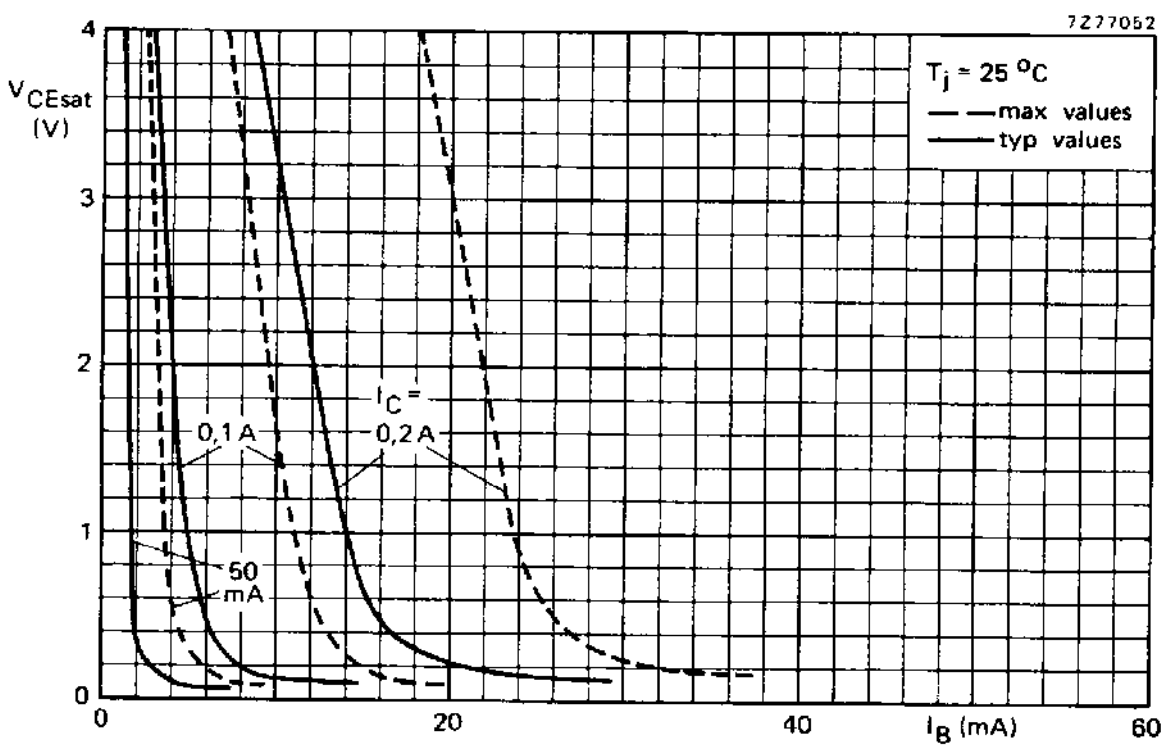

Fig. 12 Typical collector-emitter saturation voltage.