General-purpose CMOS Logic IC Series (BU4S Series)

Single Gate CMOS Logic ICs <Logic Gate>

BU4S01G2, BU4S11G2, BU4SU69G2, BU4S71G2, BU4S81G2, BU4S584G2

●Description

The BU4SxxxG2 are 1ch logic ICs encapsulated in an SSOP5 package.
They are interchangeable with the genaral-purpose BU4000B series.

●Features

1) Low power consumption
2) Surface mount package (SSOP5)
3) Broad operating supply voltage range: 3V-16V
4) High input impedance
5) High fan out
6) L-TTL2 and LS-TTL1 inputs can be driven directly.
7) Function compatible with BU4000B series (1ch).

●Applications

Suitable for use where low power consumption and a high degree of noise tolerance are required.

●Lineup

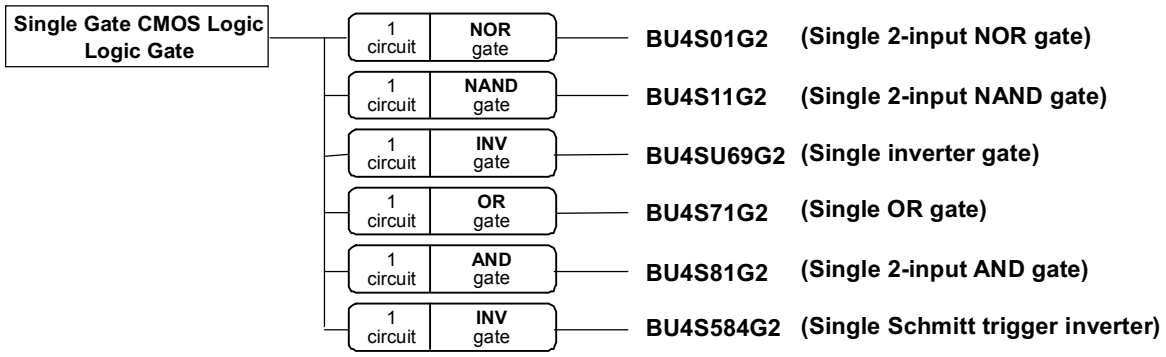

Oct. 2008

●Absolute Maximum Ratings

Parameter	Symbol	Limit						Unit
		BU4S01G2	BU4S11G2	BU4SU69G2	BU4S71G2	BU4S81G2	BU4S584G2	
Power supply voltage	VDD	−0.3 to 18						V
Supply current	Iin	±10						mA
Operating temperature	Topr	−40 to 85						℃
Storage temperature	Tstg	−55 to 150						℃
Input voltage	VIN	−0.3 to VDD+0.3						V
Maximum junction temperature	Tjmax	150						℃

●Recommended Operating Conditions

Parameter	Symbol	Limit						Unit
		BU4S01G2	BU4S11G2	BU4SU69G2	BU4S71G2	BU4S81G2	BU4S584G2	
Operating power supply	VDD	3 to 16						V
Input voltage	VIN	0 to VDD						V

●Thermal Derating Curve

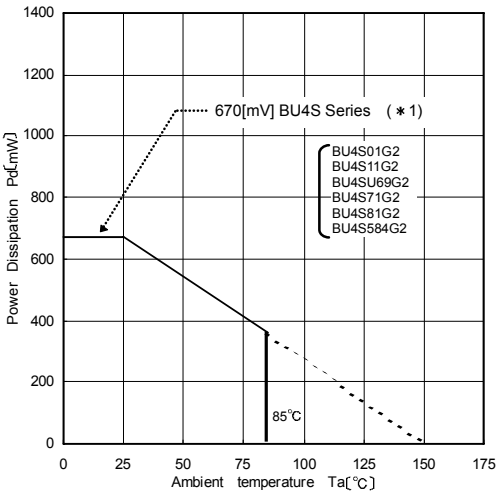

●Input / output Equivalent Circuits

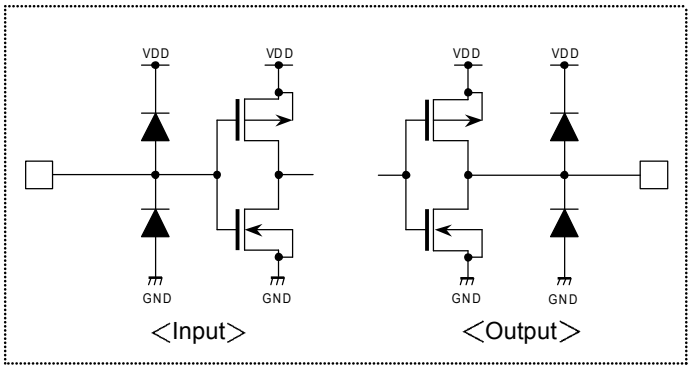

(＊1)	UNIT
5.3	mW/℃

When used at Ta=25[°C] or above, values of above are reduced per 1[°C].
Power dissipation is the value for mounting 70[mm] x 70[mm] x 1.6[mm] FR4 glass epoxy circuit board (copper foil area is 3% or less).

●Switching Characteristics

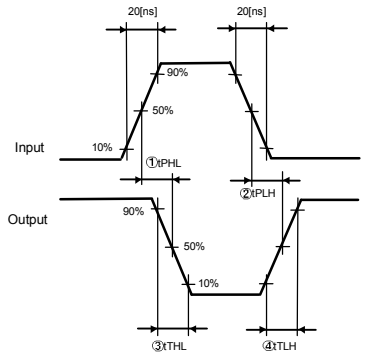

Description of symbols

(1) tPHL: Time up to 50% of rise time of input waveform
~ 50% of fall time of output waveform

(2) tPLH: Time up to 50% of fall time of input waveform
~ 50% of rise time of output waveform

(3) tTHL: Time up to 90% ~ 10% of fall time of output waveform

(4) tTLH: Time up to 10% ~ 90% of rise time of output waveform

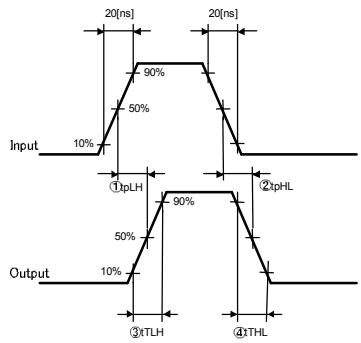

Description of symbols

(1) tPLH: Time up to 50% of rise time of input waveform
~50% of rise time of output waveform

(2) tPHL: Time up to 50% of fall time of input waveform
~ 50% of fall time of output waveform

(3) tTLH: Time up to 10% ~ 90% of rise time of output waveform

(4) tTHL: Time up to 90% ~ 10% of fall time of output waveform

●Electrical Characteristics（BU4S01G2）

DC Characteristics (Unless otherwise noted, VSS=0[V],Ta=25[℃])

Parameter	Symbol	Standard Value			Unit	Condition		Fig. No
		MIN	TYP	MAX		VDD[V]		
Input “H” voltage	VIH	3.5	–	–	V	5	VOUT=0.5[V]	1
		7.0	–	–		10	VOUT=1.0[V]	2
		11.0	–	–		15	VOUT=1.5[V]	3
							|IOUT|<1[μA]	
Input “L” voltage	VIL	–	–	1.5	V	5	VOUT=4.5[V]	1
		–	–	3.0		10	VOUT=9.0[V]	2
		–	–	4.0		15	VOUT=13.5[V]	3
							|IOUT|<1[μA]	
Input “H” current	IIH	–	–	0.3	μA	15	VIH=15[V]	–
Input “L” current	IIL	–	–	−0.3	μA	15	VIL=0[V]	–
Output “H” voltage	VOH	4.95	–	–	V	5	|IOUT|<1[μA] VIN=VSS	4
		9.95	–	–		10		
		14.95	–	–		15		
Output “L” voltage	VOL	–	–	0.05	V	5	|IOUT|<1[μA] VIN=VDD	5
		–	–	0.05		10		
		–	–	0.05		15		
Output “H” current	IOH	−0.51	–	–	mA	5	VOH=4.6[V]	4
		−2.1	–	–		5	VOH=2.5[V]	
		−1.3	–	–		10	VOH=9.5[V]	
		−3.4	–	–		15	VOH=13.5[V]	
							VIN=VSS	
Output “L” current	IOL	0.51	–	–	mA	5	VOL=0.4[V]	5
		1.3	–	–		10	VOL=0.5[V]	
		3.4	–	–		15	VOL=1.5[V]	
							VIN=VDD	
Static supply current	IDD	–	–	0.25	μA	5	VIN=VSS,VDD	–
		–	–	0.5		10		
		–	–	1.0		15		

Switching Characteristics (Unless otherwise noted, VSS=0[V],Ta=25[℃],CL=50[pF])

Parameter	Symbol	Standard Value			Unit	Condition		Fig. No
		MIN	TYP	MAX		VDD[V]		
Output rising time	tTLH	–	70	–	ns	5	–	6
		–	35	–		10		
		–	30	–		15		
Output falling time	tTHL	–	70	–	ns	5	–	7
		–	35	–		10		
		–	30	–		15		
Propagation delay time	tPLH	–	85	–	ns	5	–	8
		–	40	–		10		
		–	30	–		15		
	tPHL	–	85	–	ns	5	–	9
		–	40	–		10		
		–	30	–		15		
Input capacitance	CIN	–	5	–	pF	5	–	–

●Electrical Characteristics（BU4S11G2）

DC Characteristics (Unless otherwise noted, VSS=0[V],Ta=25[℃])

Parameter	Symbol	Standard Value			Unit	Condition		Fig. No
		MIN	TYP	MAX		VDD[V]		
Input “H” voltage	VIH	3.5	–	–	V	5	VOUT=0.5[V]	10
		7.0	–	–		10	VOUT=1.0[V]	11
		11.0	–	–		15	VOUT=1.5[V] |IOUT|<1[μA]	12
Input “L” voltage	VIL	–	–	1.5	V	5	VOUT=4.5[V]	10
		–	–	3.0		10	VOUT=9.0[V]	11
		–	–	4.0		15	VOUT=13.5[V] |IOUT|<1[μA]	12
Input “H” current	IIH	–	–	0.3	μA	15	VIH=15[V]	–
Input “L” current	IIL	–	–	-0.3	μA	15	VIL=0[V]	–
Output “H” voltage	VOH	4.95	–	–	V	5	|IOUT|<1[μA] VIN=VSS	13
		9.95	–	–		10		
		14.95	–	–		15		
Output “L” voltage	VOL	–	–	0.05	V	5	|IOUT|<1[μA] VIN=VDD	14
		–	–	0.05		10		
		–	–	0.05		15		
Output “H” current	IOH	−0.51	–	–	mA	5	VOH=4.6[V]	13
		−2.1	–	–		5	VOH=2.5[V]	
		−1.3	–	–		10	VOH=9.5[V]	
		−3.4	–	–		15	VOH=13.5[V] VIN=VSS	
Output “L” current	IOL	0.51	–	–	mA	5	VOL=0.4[V]	14
		1.3	–	–		10	VOL=0.5[V]	
		3.4	–	–		15	VOL=1.5[V] VIN=VDD	
Static supply current	IDD	–	–	0.25	μA	5	VIN=VSS,VDD	–
		–	–	0.5		10		
		–	–	1.0		15		

Switching Characteristics (Unless otherwise noted, VSS=0[V],Ta=25[℃],CL=50[pF])

Parameter	Symbol	Standard Value			Unit	Condition		Fig. No
		MIN	TYP	MAX		VDD[V]		
Output rising time	tTLH	–	70	–	ns	5	–	15
		–	35	–		10		
		–	30	–		15		
Output falling time	tTHL	–	70	–	ns	5	–	16
		–	35	–		10		
		–	30	–		15		
Propagation delay time	tPLH	–	85	–	ns	5	–	17
		–	40	–		10		
		–	30	–		15		
	tPHL	–	85	–	ns	5	–	18
		–	40	–		10		
		–	30	–		15		
Input capacitance	CIN	–	5	–	pF	5	–	–

●Electrical Characteristics（BU4SU69G2）

DC Characteristics (Unless otherwise noted, VSS=0[V],Ta=25[℃])

Parameter	Symbol	Standard Value			Unit	Condition		Fig. No
		MIN	TYP	MAX		VDD[V]		
Input “H” voltage	VIH	4.0	–	–	V	5	VOUT=0.5[V]	19
		8.0	–	–		10	VOUT=1.0[V]	20
		12.0	–	–		15	VOUT=1.5[V]	21
							|IOUT|<1[μA]	
Input “L” voltage	VIL	–	–	1.0	V	5	VOUT=4.5[V]	19
		–	–	2.0		10	VOUT=9.0[V]	20
		–	–	3.0		15	VOUT=13.5[V]	21
							|IOUT|<1[μA]	
Input “H” current	IIH	–	–	0.3	μA	15	VIH=15[V]	–
Input “L” current	IIL	–	–	-0.3	μA	15	VIL=0[V]	–
Output “H” voltage	VOH	4.95	–	–	V	5	|IOUT|<1[μA] VIN=VSS	22
		9.95	–	–		10		
		14.95	–	–		15		
Output “L” voltage	VOL	–	–	0.05	V	5	|IOUT|<1[μA] VIN=VDD	23
		–	–	0.05		10		
		–	–	0.05		15		
Output “H” current	IOH	−0.51	–	–	mA	5	VOH=4.6[V]	22
		−2.1	–	–		5	VOH=2.5[V]	
		−1.3	–	–		10	VOH=9.5[V]	
		−3.4	–	–		15	VOH=13.5[V]	
							VIN=VSS	
Output “L” current	IOL	0.51	–	–	mA	5	VOL=0.4[V]	23
		1.3	–	–		10	VOL=0.5[V]	
		3.4	–	–		15	VOL=1.5[V]	
							VIN=VDD	
Static supply current	IDD	–	–	0.25	μA	5	VIN=VSS,VDD	–
		–	–	0.5		10		
		–	–	1.0		15		

Switching Characteristics (Unless otherwise noted, VSS=0[V],Ta=25[℃],CL=50[pF])

Parameter	Symbol	Standard Value			Unit	Condition		Fig. No
		MIN	TYP	MAX		VDD[V]		
Output rising time	tTLH	–	70	–	ns	5	–	24
		–	35	–		10		
		–	30	–		15		
Output falling time	tTHL	–	70	–	ns	5	–	25
		–	35	–		10		
		–	30	–		15		
Propagation delay time	tPLH	–	55	–	ns	5	–	26
		–	30	–		10		
		–	25	–		15		
	tPHL	–	55	–	ns	5	–	27
		–	30	–		10		
		–	25	–		15		
Input capacitance	CIN	–	5	–	pF	5	–	–

●Electrical Characteristics（BU4S71G2）

DC Characteristics (Unless otherwise noted, VSS=0[V],Ta=25[℃])

Parameter	Symbol	Standard Value			Unit		Condition	Fig. No
		MIN	TYP	MAX		VDD[V]		
Input “H” voltage	VIH	3.5	–	–	V	5	|IOUT|<1[μA]	28
		7.0	–	–		10		29
		11.0	–	–		15		30
Input “L” voltage	VIL	–	–	1.5	V	5	|IOUT|<1[μA]	28
		–	–	3.0		10		29
		–	–	4.0		15		30
Input “H” current	IIH	–	–	0.3	μA	18	VIH=18[V]	–
Input “L” current	IIL	–	–	–0.3	μA	18	VIL=0[V]	–
Output “H” voltage	VOH	4.95	–	–	V	5	|IOUT|<1[μA] VIN=VSS or VDD	31
		9.95	–	–		10		
		14.95	–	–		15		
Output “L” voltage	VOL	–	–	0.05	V	5	|IOUT|<1[μA] VIN=VSS	32
		–	–	0.05		10		
		–	–	0.05		15		
Output “H” current	IOH	–0.51	–	–	mA	5	VOH=4.6[V]	31
		–2.1	–	–		5	VOH=2.5[V]	
		–1.3	–	–		10	VOH=9.5[V]	
		–3.4	–	–		15	VOH=13.5[V]	
Output “L” current	IOL	0.51	–	–	mA	5	VOL=0.4[V]	32
		1.3	–	–		10	VOL=0.5[V]	
		3.4	–	–		15	VOL=1.5[V]	
Static supply current	IDD	–	–	0.25	μA	5	VIN=VSS,VDD	–
		–	–	0.5		10		
		–	–	1.0		15		

Switching Characteristics (Unless otherwise noted, VSS=0[V],Ta=25[℃],CL=50[pF])

Parameter	Symbol	Standard Value			Unit		Condition	Fig. No
		MIN	TYP	MAX		VDD[V]		
Output rising time	tTLH	–	70	–	ns	5	–	33
		–	35	–		10		
		–	30	–		15		
Output falling time	tTHL	–	70	–	ns	5	–	34
		–	35	–		10		
		–	30	–		15		
Propagation delay time	tPLH	–	90	–	ns	5	–	35
		–	45	–		10		
		–	30	–		15		
	tPHL	–	90	–	ns	5	–	36
		–	45	–		10		
		–	30	–		15		
Input capacitance	CIN	–	5	–	pF	5	–	–

●Electrical Characteristics（BU4S81G2）

DC Characteristics (Unless otherwise noted, VSS=0[V],Ta=25[℃])

Parameter	Symbol	Standard Value			Unit		Condition	Fig. No
		MIN	TYP	MAX		VDD[V]		
Input “H” voltage	VIH	3.5	–	–	V	5	|IOUT|<1[μA]	37
		7.0	–	–		10		38
		11.0	–	–		15		39
Input “L” voltage	VIL	–	–	1.5	V	5	|IOUT|<1[μA]	37
		–	–	3.0		10		38
		–	–	4.0		15		39
Input “H” current	IIH	–	–	0.3	μA	18	VIH=18[V]	–
Input “L” current	IIL	–	–	–0.3	μA	18	VIL=0[V]	–
Output “H” voltage	VOH	4.95	–	–	V	5	|IOUT|<1[μA] VIN=VSS or VDD	40
		9.95	–	–		10		
		14.95	–	–		15		
Output “L” voltage	VOL	–	–	0.05	V	5	|IOUT|<1[μA] VIN=VSS	41
		–	–	0.05		10		
		–	–	0.05		15		
Output “H” current	IOH	–0.51	–	–	mA	5	VOH=4.6[V]	40
		–2.1	–	–		5	VOH=2.5[V]	
		–1.3	–	–		10	VOH=9.5[V]	
		–3.4	–	–		15	VOH=13.5[V]	
Output “L” current	IOL	0.51	–	–	mA	5	VOL=0.4[V]	41
		1.3	–	–		10	VOL=0.5[V]	
		3.4	–	–		15	VOL=1.5[V]	
Static supply current	IDD	–	–	0.25	μA	5	VIN=VSS,VDD	–
		–	–	0.5		10		
		–	–	1.0		15		

Switching Characteristics (Unless otherwise noted, VSS=0[V],Ta=25[℃],CL=50[pF])

Parameter	Symbol	Standard Value			Unit		Condition	Fig. No
		MIN	TYP	MAX		VDD[V]		
Output rising time	tTLH	–	70	–	ns	5	–	42
		–	35	–		10		
		–	30	–		15		
Output falling time	tTHL	–	70	–	ns	5	–	43
		–	35	–		10		
		–	30	–		15		
Propagation delay time	tPLH	–	90	–	ns	5	–	44
		–	45	–		10		
		–	30	–		15		
	tPHL	–	90	–	ns	5	–	45
		–	45	–		10		
		–	30	–		15		
Input capacitance	CIN	–	5	–	pF	5	–	–

●Electrical Characteristics（BU4S584G2）

DC Characteristics (Unless otherwise noted, VSS=0[V],Ta=25[℃])

Parameter	Symbol	Standard Value			Unit	Condition		Fig. No
		MIN	TYP	MAX		VDD[V]		
Input “H” voltage	VIH	2.6	–	–	V	3	–	46
		3.5	–	–		5		47
		7.0	–	–		10		48
		11.0	–	–		15		
Input “L” voltage	VIL	–	–	0.4	V	3	–	46
		–	–	1.5		5		47
		–	–	3.0		10		48
		–	–	4.0		15		
Input “H” current	IIH	–	–	0.3	μA	15	VIH=15[V]	–
Input “L” current	IIL	–	–	-0.3	μA	15	VIL=0[V]	–
Output “H” voltage	VOH	2.95	–	–	V	3	|IOUT|<1[μA] VIN=VSS	49
		4.95	–	–		5		
		9.95	–	–		10		
		14.95	–	–		15		
Output “L” voltage	VOL	–	–	0.05	V	3	|IOUT|<1[μA] VIN=VDD	50
		–	–	0.05		5		
		–	–	0.05		10		
		–	–	0.05		15		
Output “H” current	IOH	-0.1	–	–	mA	3	VOH=2.7[V]	49
		-0.51	–	–		5	VOH=4.6 [V]	
		-2.1	–	–		5	VOH=2.5[V]	
		-1.3	–	–		10	VOH=9.5[V]	
		-3.4	–	–		15	VOH=13.5[V]	
Output “L” current	IOL	0.1	–	–	mA	3	VOL=0.3[V]	50
		0.51	–	–		5	VOL=0.4[V]	
		1.3	–	–		10	VOL=0.5[V]	
		3.4	–	–		15	VOL=1.5[V]	
Hysteresis voltage	VH	0.1	–	0.5	V	3	–	–
		0.15	–	0.6		5		
		0.25	–	1.0		10		
		0.40	–	1.5		15		
Supply current	IDD	–	–	0.2	μA	3	VIN=VSS or VDD	–
		–	–	0.25		5		
		–	–	0.5		10		
		–	–	1.0		15		

Switching Characteristics (Unless otherwise noted, VSS=0[V],Ta=25[℃],CL=50[pF])

Parameter	Symbol	Standard Value			Unit	Condition		Fig. No
		MIN	TYP	MAX		VDD[V]		
Output rising time	tTLH	–	140	–	ns	3	–	51
		–	70	–		5		
		–	35	–		10		
		–	30	–		15		
Output falling time	tTHL	–	140	–	ns	3	–	52
		–	70	–		5		
		–	35	–		10		
		–	30	–		15		
Propagation delay time	tPLH	–	230	–	ns	3	–	53
		–	125	–		5		
		–	60	–		10		
		–	50	–		15		
	tPHL	–	230	–	ns	3	–	54
		–	125	–		5		
		–	60	–		10		
		–	50	–		15		

●Electrical Characteristics Curves（BU4S01G2）

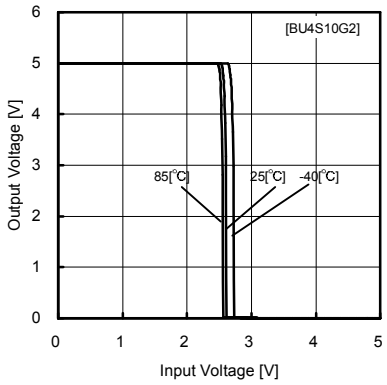

Fig.1
Output voltage－Input voltage characteristics
（VDD=5[V] / VSS=0[V]）

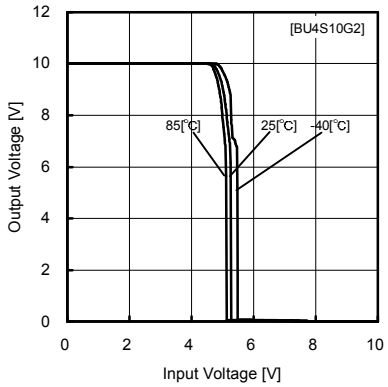

Fig.2
Output voltage－Input voltage characteristics
（VDD=10[V] / VSS=0[V]）

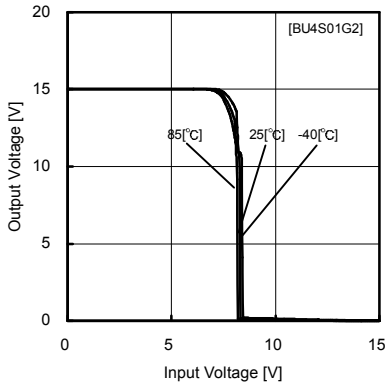

Fig.3
Output voltage－Input voltage characteristics
（VDD=15[V] / VSS=0[V]）

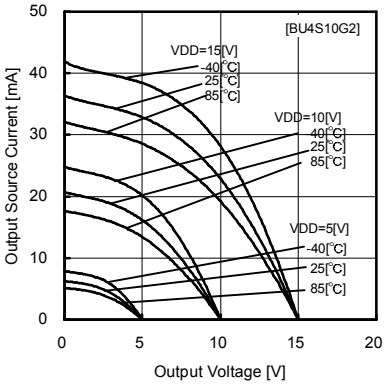

Fig.4
Output source current－voltage characteristics

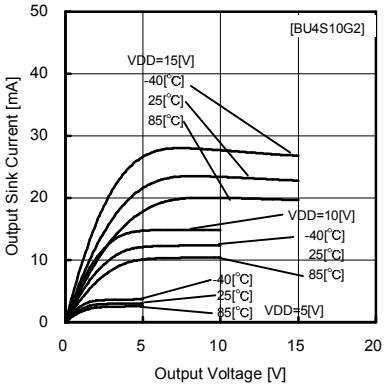

Fig.5
Output sink current－voltage characteristics

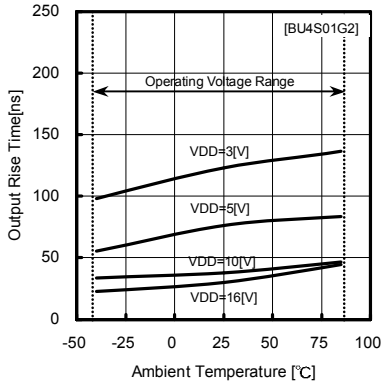

Fig.6
Output rising time tTLH

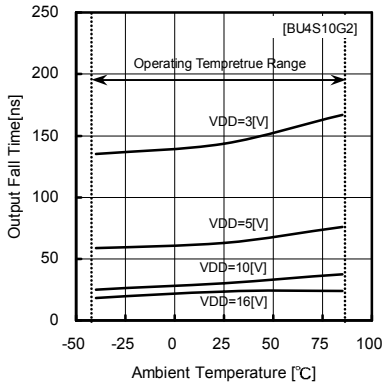

Fig.7
Output falling time tTHL

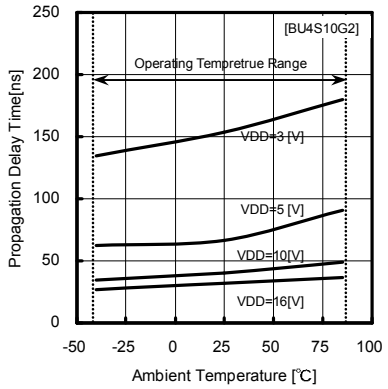

Fig.8
Propagation delay time tPLH

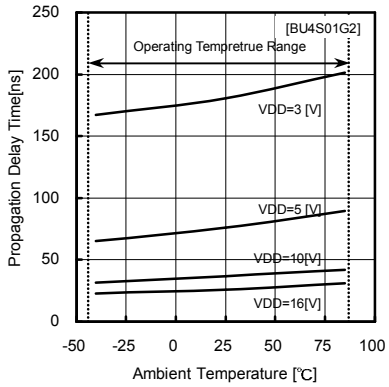

Fig.9
Propagation delay time tPHL

●Pinout Diagram ▪Pin Description ▪Input / Output Table

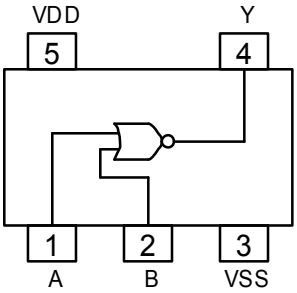

PIN	PIN NAME	I/O	PIN FUNCTION
1	A	I	Input
2	B	I	Input
3	VSS	－	Power supply(-)
4	Y	O	Output
5	VDD	－	Power supply(+)

A	B	Y
L	L	H
L	H	L
H	L	L
H	H	L

●Electrical Characteristics Curves（BU4S11G2）

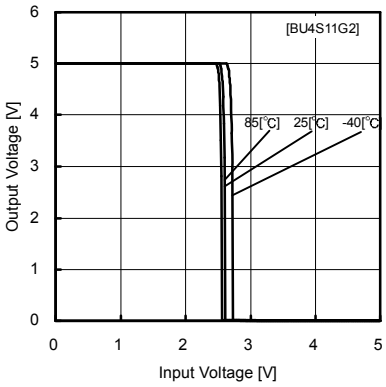

Fig.10
Output voltage－Input voltage characteristics
（VDD=5[V]/ VSS=0[V]）

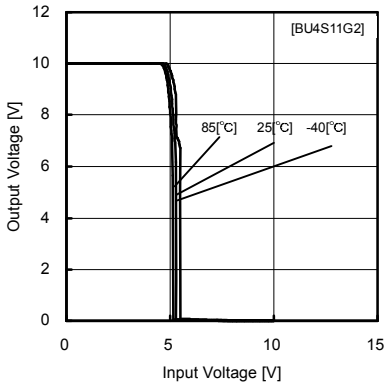

Fig.11
Output voltage－Input voltage haracteristics
（VDD=10[V] / VSS=0[V]）

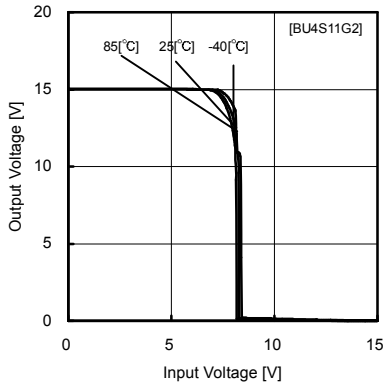

Fig.12
Output voltage－Input voltage characteristics
（VDD=15[V] / VSS=0[V]）

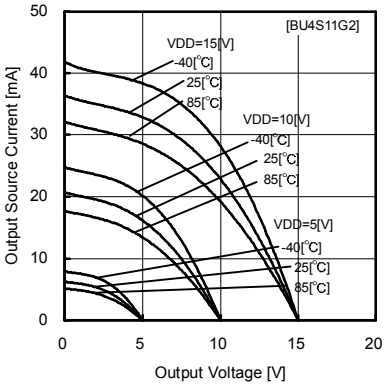

Fig.13
Output source current－voltage characteristics

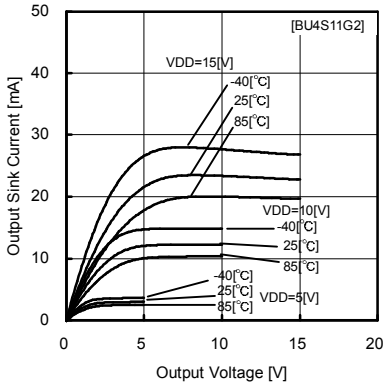

Fig.14
Output sink current－voltage characteristics

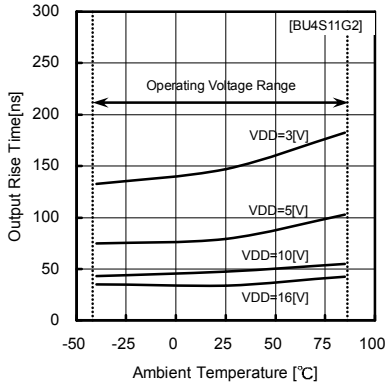

Fig.15
Output rising time tTLH

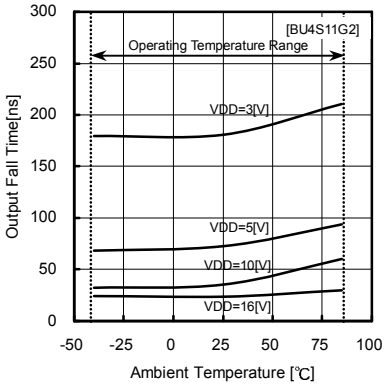

Fig.16
Output falling time tTHL

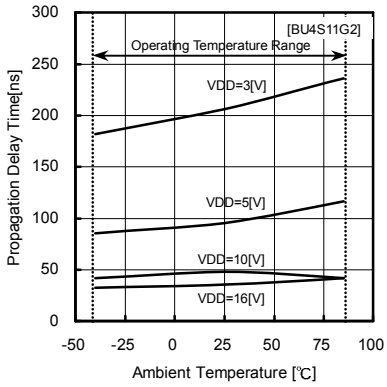

Fig.17
Propagation delay time tPLH

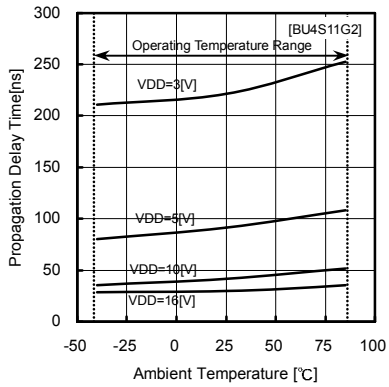

Fig.18
Propagation delay time tPHL

●Pinout Diagram ▪ Pin Description ▪ Input / Output Table

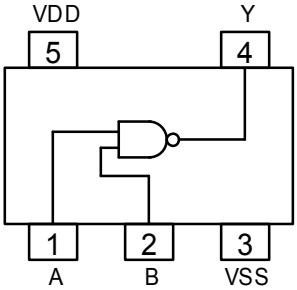

PIN	PIN NAME	I/O	PIN FUNCTION
1	A	I	Input
2	B	I	Input
3	VSS	–	Power supply(-)
4	Y	O	Output
5	VDD	–	Power supply(+)

A	B	Y
L	L	H
L	H	H
H	L	H
H	H	L

●Reference Date（BU4SU69G2）

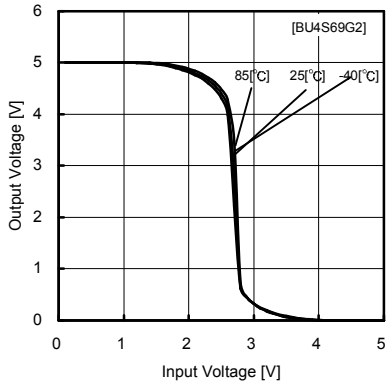

Fig.19
Output voltage－Input voltage characteristics
（VDD=5[V] / VSS=0[V]）

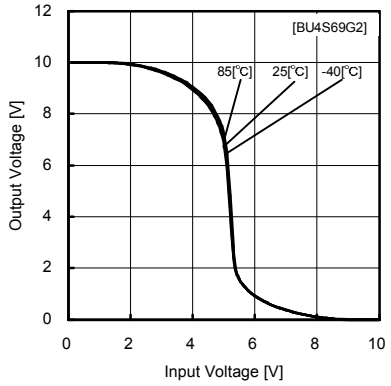

Fig.20
Output voltage－Input voltagecharacteristics
（VDD=10[V] / VSS=0[V]）

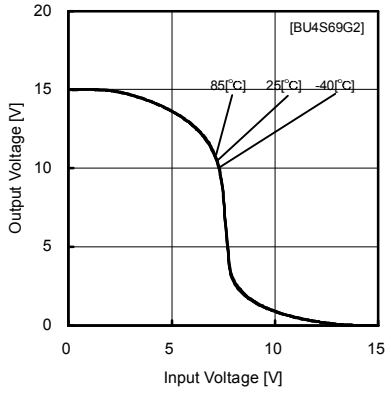

Fig.21
Output voltage－Input voltage characteristics
（VDD=15[V] / VSS=0[V]）

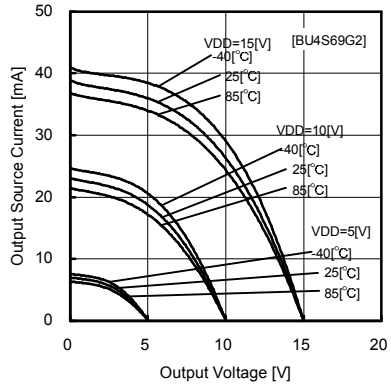

Fig.22
Output source current－voltage characteristics

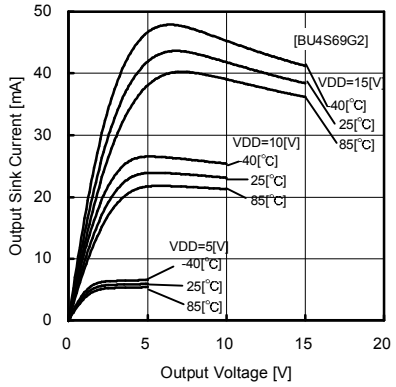

Fig.23
Output sink current－voltage characteristics

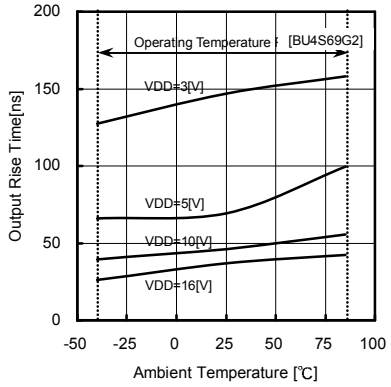

Fig.24
Output rising time tTLH

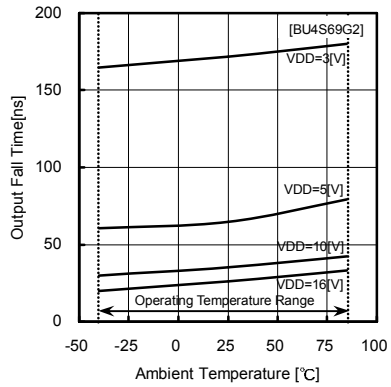

Fig.25
Output falling time tTHL

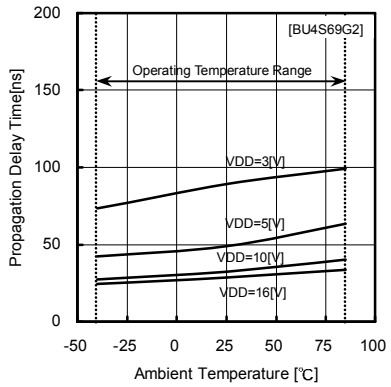

Fig.26
Propagation delay time tPLH

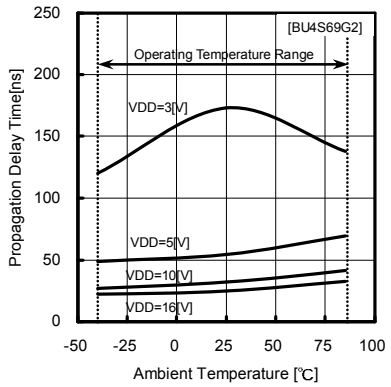

Fig.27
Propagation delay time tPHL

●Pinout Diagram・Pin Description・Input / Output Table

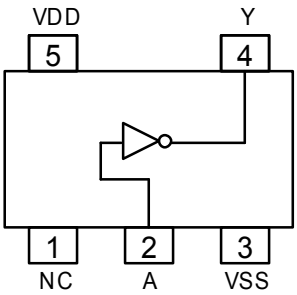

PIN	PIN NAME	I/O	PIN FUNCTION
1	NC	－	NC
2	A	I	Input
3	VSS	－	Power supply(-)
4	Y	O	Output
5	VDD	－	Power supply(+)

A	Y
L	H
H	L

●Reference Date（BU4S71G2）

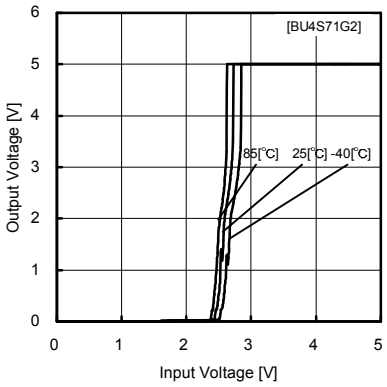

Fig.28
Output voltage－Input voltage characteristics
（VDD=5[V]/ VSS=0[V]）

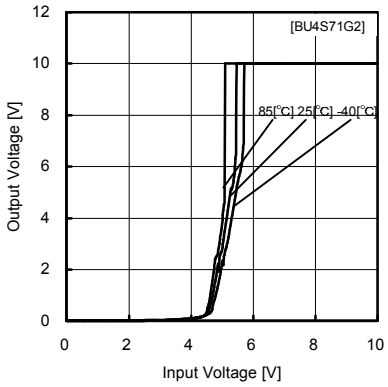

Fig.29
Output voltage－Input voltage characteristics
（VDD=10[V] / VSS=0[V]）

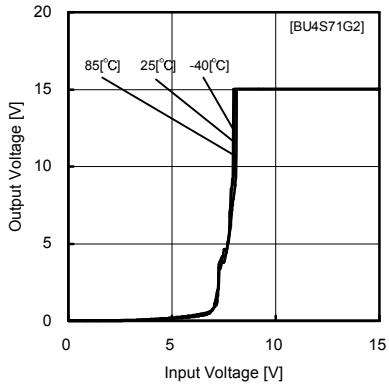

Fig.30
Output voltage－Input voltage characteristics
（VDD=15[V] / VSS=0[V]）

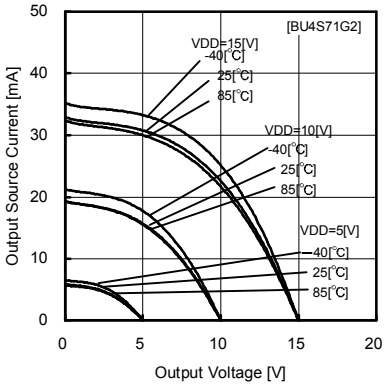

Fig.31
Output source current－voltage characteristics

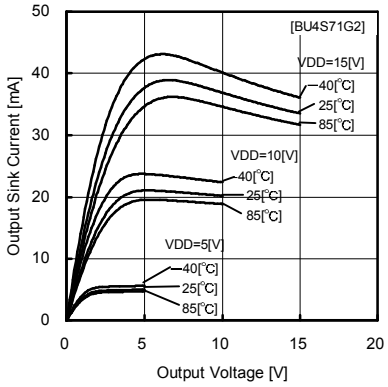

Fig.32
Output sink current－voltage characteristics

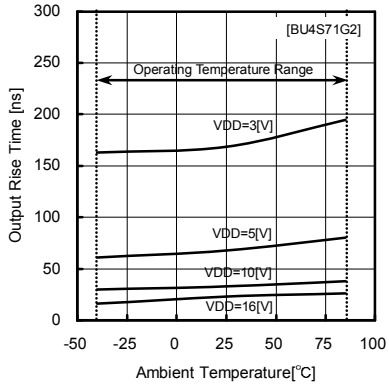

Fig.33
Rising time tTLH

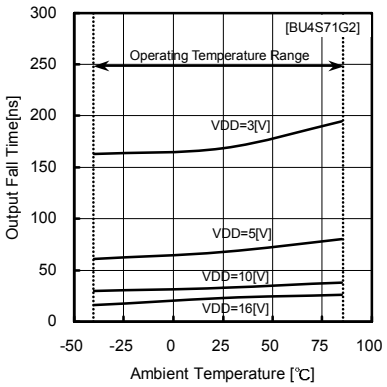

Fig.34
falling time tTHL

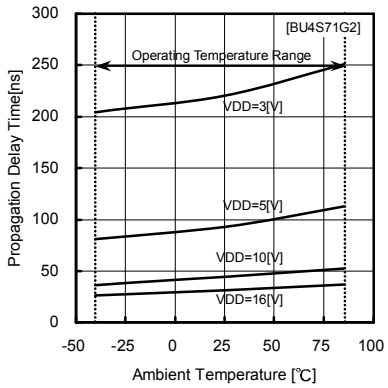

Fig.35
Propagation delay time tPLH

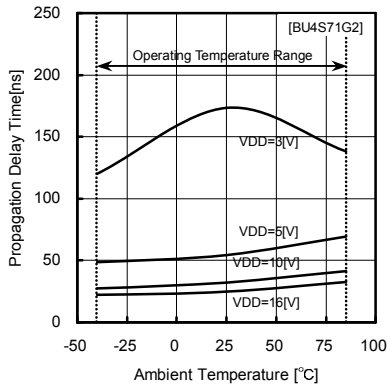

Fig.36
Propagation delay time tPHL

●Pinout Diagram・Pin Description・Input / Output Table

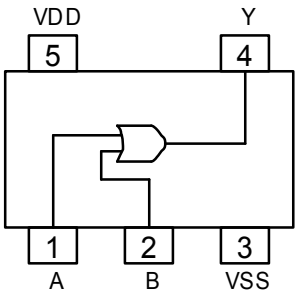

PIN	PIN NAME	I/O	PIN FUNCTION
1	A	I	Input
2	B	I	Input
3	VSS	–	Power supply(-)
4	Y	O	Output
5	VDD	–	Power supply(+)

A	B	Y
L	L	L
L	H	H
H	L	H
H	H	H

●Electrical Charasteristics Curves（BU4S81G2）

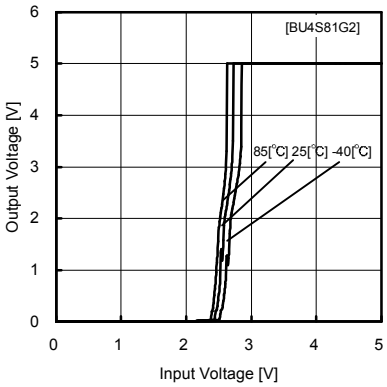

Fig.37
Output voltage－Iput voltage characteristics
（VDD=5[V] / VSS=0[V]）

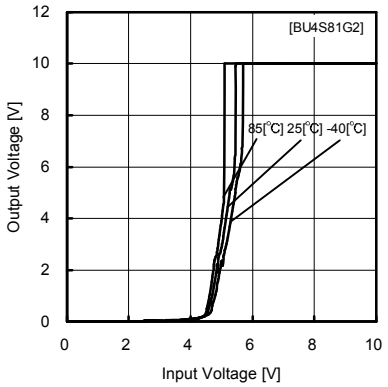

Fig.38
Output voltae－Input voltage characteristics
（VDD=10[V] / VSS=0[V]）

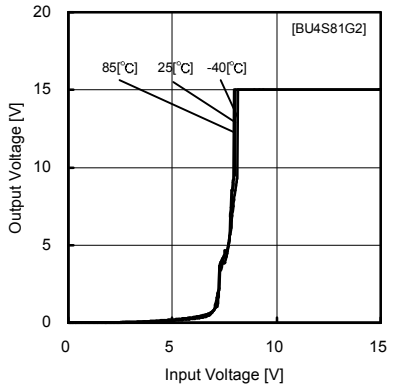

Fig.39
Output voltage－Input voltage characteristics
（VDD=15[V] / VSS=0[V]）

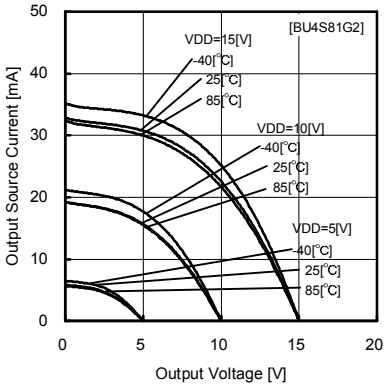

Fig.40
Output source current－voltage characteristics

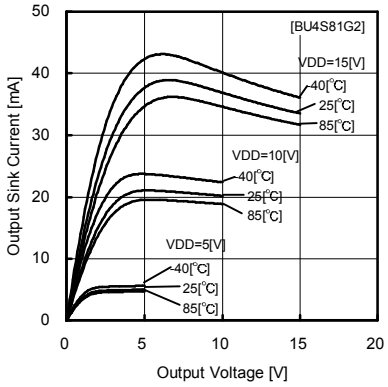

Fig.41
Output sink current－voltage characteristics

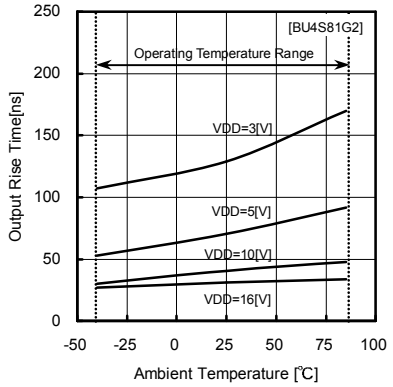

Fig.42
Output rising time tTLH

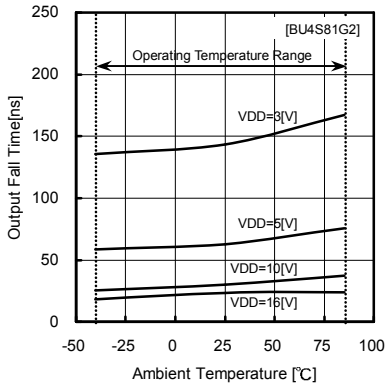

Fig.43
Output falling time tTHL

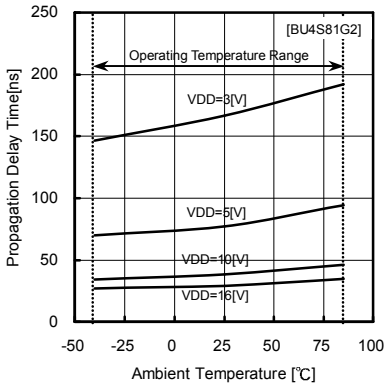

Fig.44
Propagation delay time tPLH

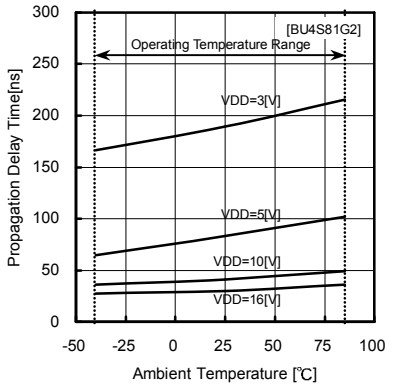

Fig.45
Propagation delay time tPHL

●Pinout Diagram ▪ Pin Description ▪ Input / Output Table

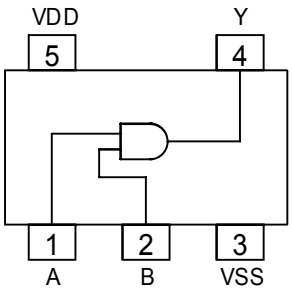

PIN	PIN NAME	I/O	PIN FUNCTION
1	NC	－	Input
2	A	I	Input
3	VSS	－	Power supply(-)
4	Y	O	Output
5	VDD	－	Power supply(+)

A	B	Y
L	L	L
L	H	L
H	L	L
H	H	H

●Electrical Charasteristics Curves（BU4S584G2）

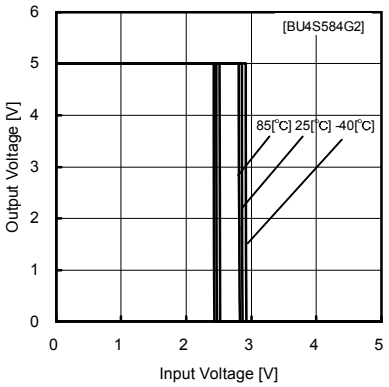

Fig.46
Output voltage－Input voltage characteristics
（VDD=5[V] / VSS=0[V]）

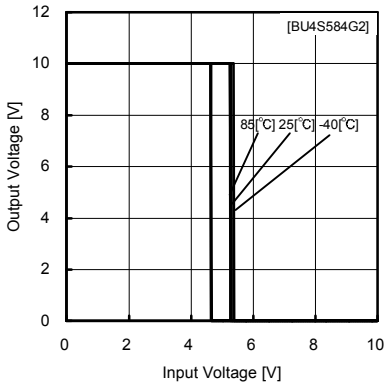

Fig.47
Output voltage－Input voltage characteristics
（VDD=10[V] / VSS=0[V]）

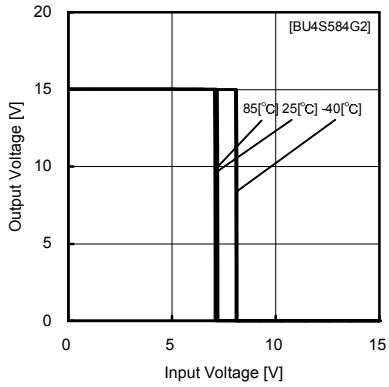

Fig.48
Output voltage－Input voltage characteristics
（VDD=15[V] / VSS=0[V]）

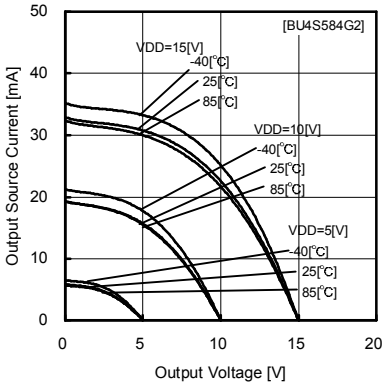

Fig.49
Output source current－voltage characteristics

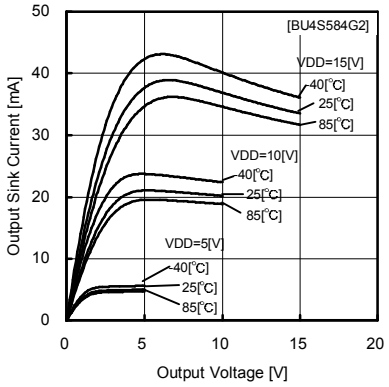

Fig.50
Output sink current－voltage characteristics

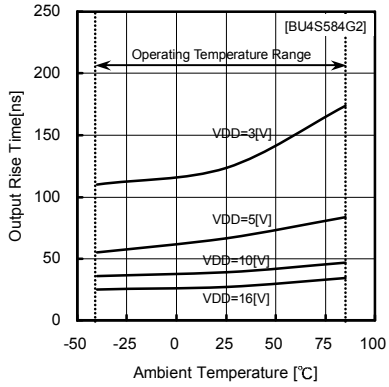

Fig.51
Output rising time tTLH

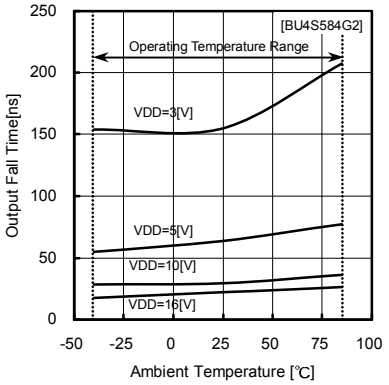

Fig.52
Output falling time tTHL

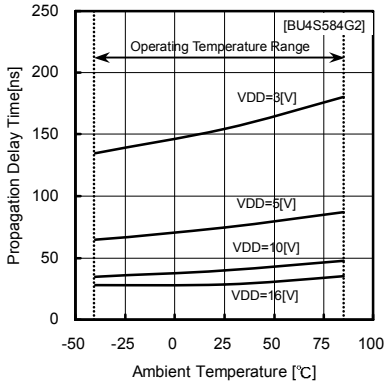

Fig.53
Propagation delay time tPLH

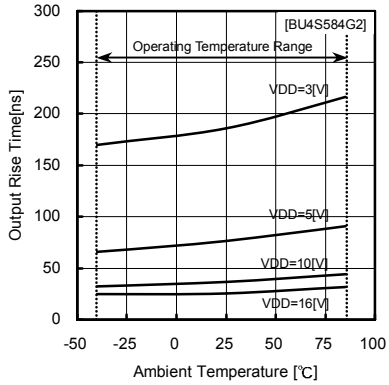

Fig.54
Propagation delay time tPHL

●Pinout Diagram ▪ Pin Description ▪ Input / Output Table

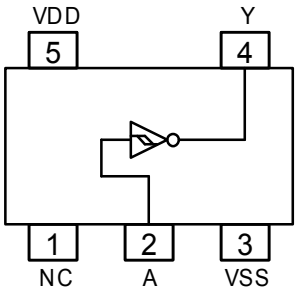

PIN	PIN NAME	I/O	PIN FUNCTION
1	NC	－	NC
2	A	I	Input
3	VSS	－	Power supply(-)
4	Y	O	Output
5	VDD	－	Power supply(+)

A	Y
L	H
H	L

●Operation Notes

1. Absolute Maximum ratings
   An excess in the absolute maximum ratings, such as supply voltage, temperature range of operating conditions, etc., can break down the devices, thus making impossible to identify breaking mode, such as short circuit or an open circuit. If any over rated values will expect to exceed the absolute maximum ratings, consider adding circuit protection devices, such as fuses.

2. Connecting the power supply connector backward
   Connecting of the power supply in reverse polarity can damage IC. Take precautions when connecting the power supply lines. An external direction diode can be added.

3. Power supply lines
   Design PCB layout pattern to provide low impedance GND and supply lines. To obtain a low noise ground and supply line, separate the ground section and supply lines of the digital and analog blocks. Furthermore, for all power supply terminals to ICs, connect a capacitor between the power supply and the GND terminal. When applying electrolytic capacitors in the circuit, not that capacitance characteristic values are reduced at low temperatures.

4. GND voltage
   The potential of GND pin must be minimum potential in all operating conditions.

5. Thermal design
   Use a thermal design that allows for a sufficient margin in light of the power dissipation (Pd) in actual operating conditions.

6. Inter-pin shorts and mounting errors
   Use caution when positioning the IC for mounting on printed circuit boards. The IC may be damaged if there is any connection error or if pins are shorted together.

7. Actions in strong electromagnetic field
   Use caution when using the IC in the presence of a strong electromagnetic field as doing so may cause the IC to malfunction.

8. Testing on application boards
   When testing the IC on an application board, connecting a capacitor to a pin with low impedance subjects the IC to stress. Always discharge capacitors after each process or step. Always turn the IC's power supply off before connecting it to or removing it from a jig or fixture during the inspection process. Ground the IC during assembly steps as an antistatic measure. Use similar precaution when transporting or storing the IC.

9. Ground Wiring Pattern
   When using both small signal and large current GND patterns, it is recommended to isolate the two ground patterns, placing a signal ground point at the ground potential of application so that the pattern wiring resistance and voltage variations caused by large currents do not cause variations in the small signal ground voltage. Be careful not to change the GND wiring pattern of any external components, either.

10. Unused input terminals
    Connect all unused input terminals to VDD or VSS in order to prevent excessive current or oscillation.
    Insertion of a resistor (100kΩ approx.) is also recommended.

●Packaging Specifications

SSOP5

<Dimension>

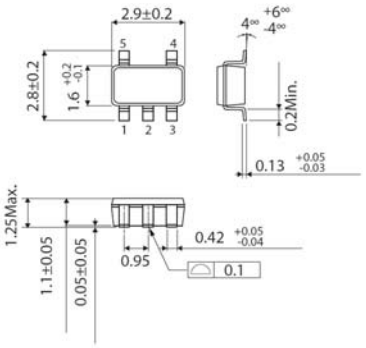

(Unit:mm)

<Tape and Reel information>

Tape	Embossed carrier tape
Quantity	3000pcs
Direction of feed	TR (Pin1 is at the upper right when holding the reel with the left hand and pulling towards the right)

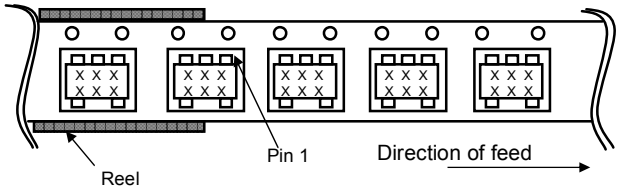

※please order in multiples of the minimum package quantity.

●Part Number Explanation

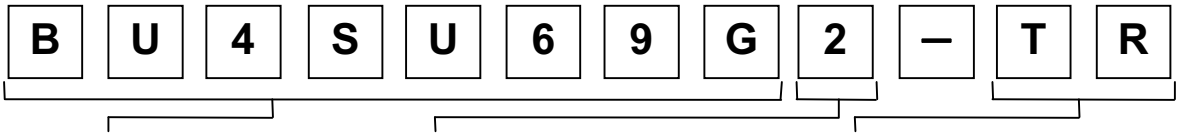

Part Number

BU4S01 BU4S71
BU4S11 BU4S81
BU4SU69 BU4S584

Package Type

- G2 : SSOP5

Packaging and forming specification

TR: Embossed tape reel
Pin 1 opposite of feeding side

- The contents described herein are correct as of October, 2008
- The contents described herein are subject to change without notice. For updates of the latest information, please contact and confirm with ROHM CO.,LTD.
- Any part of this application note must not be duplicated or copied without our permission.
- Application circuit diagrams and circuit constants contained herein are shown as examples of standard use and operation. Please pay careful attention to the peripheral conditions when designing circuits and deciding upon circuit constants in the set.
- Any data, including, but not limited to application circuit diagrams and information, described herein are intended only as illustrations of such devices and not as the specifications for such devices. ROHM CO.,LTD. disclaims any warranty that any use of such devices shall be free from infringement of any third party's intellectual property rights or other proprietary rights, and further, assumes no liability of whatsoever nature in the event of any such infringement, or arising from or connected with or related to the use of such devices.
- Upon the sale of any such devices, other than for buyer's right to use such devices itself, resell or otherwise dispose of the same, implied right or license to practice or commercially exploit any intellectual property rights or other proprietary rights owned or controlled by ROHM CO., LTD. is granted to any such buyer.
- The products described herein utilize silicon as the main material.
- The products described herein are not designed to be X ray proof.

The products listed in this catalog are designed to be used with ordinary electronic equipment or devices (such as audio visual equipment, office-automation equipment, communications devices, electrical appliances and electronic toys).
Should you intend to use these products with equipment or devices which require an extremely high level of reliability and the malfunction of which would directly endanger human life (such as medical instruments, transportation equipment, aerospace machinery, nuclear-reactor controllers, fuel controllers and other safety devices), please be sure to consult with our sales representative in advance.

Excellence in Electronics

ROHM

ROHM CO., LTD.

21 Saiin Mizosaki-cho, Ukyo-ku, Kyoto
615-8585, Japan
TEL: +81-75-311-2121 FAX: +81-75-315-0172
URL http: // www. rohm. com

Published by
KTC LSI Development Headquarters
LSI Business Pomotion Group

Contact us for further information about the products.

San Diego	TEL: +1-858-625-3630	FAX: +1-858-625-3670
Atlanta	TEL: +1-770-754-5972	FAX: +1-770-754-0691
Boston	TEL: +1-978-371-0382	FAX: +1-928-438-7164
Chicago	TEL: +1-847-368-1006	FAX: +1-847-368-1008
Dallas	TEL: +1-469-287-5366	FAX: +1-469-362-7973
Denver	TEL: +1-303-708-0908	FAX: +1-303-708-0858
Detroit	TEL: +1-248-348-9920	FAX: +1-248-348-9942
Nashville	TEL: +1-615-620-6700	FAX: +1-615-620-6702
Mexico	TEL: +52-33-3123-2001	FAX: +52-33-3123-2002
Düsseldorf	TEL: +49-2154-9210	FAX: +49-2154-921400
Munich	TEL: +49-8999-216168	FAX: +49-8999-216176
Stuttgart	TEL: +49-711-7272-370	FAX: +49-711-7272-3720
France	TEL: +33-1-5697-3060	FAX: +33-1-5697-3080
United Kingdom	TEL: +44-1-908-306700	FAX: +44-1-908-235788
Denmark	TEL: +45-3694-4739	FAX: +45-3694-4789
Espoo	TEL: +358-9725-54491	FAX: +358-9-7255-4499
Salo	TEL: +358-2-7332234	FAX: +358-2-7332237
Oulu	TEL: +358-8-5372930	FAX: +358-8-5372931
Barcelona	TEL: +34-9375-24320	FAX: +34-9375-24410
Hungary	TEL: +36-1-4719338	FAX: +36-1-4719339
Poland	TEL: +48-22-5757213	FAX: +48-22-5757001
Russia	TEL: +7-495-739-41-74	FAX: +7-495-739-41-74
Seoul	TEL: +82-2-8182-700	FAX: +82-2-8182-715
Masan	TEL: +82-55-240-6234	FAX: +82-55-240-6236
Dalian	TEL: +86-411-8230-8549	FAX: +86-411-8230-8537
Beijing	TEL: +86-10-8525-2483	FAX: +86-10-8525-2489
Tianjin	TEL: +86-22-23029181	FAX: +86-22-23029183
Shanghai	TEL: +86-21-6279-2727	FAX: +86-21-6247-2066
Hangzhou	TEL: +86-571-87658072	FAX: +86-571-87658071
Nanjing	TEL: +86-25-8689-0015	FAX: +86-25-8689-0393
Ningbo	TEL: +86-574-87654201	FAX: +86-574-87654208
Qingdao	TEL: +86-532-5779-312	FAX:+86-532-5779-653
Suzhou	TEL: +86-512-6807-1300	FAX: +86-512-6807-2300
Wuxi	TEL: +86-510-82702693	FAX: +86-510-82702992
Shenzhen	TEL: +86-755-8307-3008	FAX: +86-755-8307-3003
Dongguan	TEL: +86-769-8393-3320	FAX: +86-769-8398-4140
Fuzhou	TEL: +86-591-8801-8698	FAX: +86-591-8801-8690
Guangzhou	TEL: +86-20-3878-8100	FAX: +86-20-3825-5965
Huizhou	TEL:+86-752-205-1054	FAX: +86-752-205-1059
Xiamen	TEL: +86-592-238-5705	FAX: +86-592-239-8380
Zhuhai	TEL: +86-756-3232-480	FAX: +86-756-3232-460
Hong Kong	TEL: +852-2-740-6262	FAX: +852-2-375-8971
Taipei	TEL: +886-2-2500-6956	FAX: +886-2-2503-2869
Kaohsiung	TEL: +886-7-237-0881	FAX: +886-7-238-7332
Singapore	TEL: +65-6332-2322	FAX: +65-6332-5662
Philippines	TEL: +63-2-807-6872	FAX: +63-2-809-1422
Thailand	TEL: +66-2-254-4890	FAX: +66-2-256-6334
Kuala Lumpur	TEL: +60-3-7958-8355	FAX: +60-3-7958-8377
Penang	TEL: +60-4-2286453	FAX: +60-4-2286452
Kyoto	TEL: +81-75-365-1218	FAX: +81-75-365-1228
Yokohama	TEL: +81-45-476-2290	FAX: +81-45-476-2295

Catalog No.08T690A '08.10 ROHM ©

Notes

No copying or reproduction of this document, in part or in whole, is permitted without the consent of ROHM CO.,LTD.

The content specified herein is subject to change for improvement without notice.

The content specified herein is for the purpose of introducing ROHM's products (hereinafter "Products"). If you wish to use any such Product, please be sure to refer to the specifications, which can be obtained from ROHM upon request.

Examples of application circuits, circuit constants and any other information contained herein illustrate the standard usage and operations of the Products. The peripheral conditions must be taken into account when designing circuits for mass production.

Great care was taken in ensuring the accuracy of the information specified in this document. However, should you incur any damage arising from any inaccuracy or misprint of such information, ROHM shall bear no responsibility for such damage.

The technical information specified herein is intended only to show the typical functions of and examples of application circuits for the Products. ROHM does not grant you, explicitly or implicitly, any license to use or exercise intellectual property or other rights held by ROHM and other parties. ROHM shall bear no responsibility whatsoever for any dispute arising from the use of such technical information.

The Products specified in this document are intended to be used with general-use electronic equipment or devices (such as audio visual equipment, office-automation equipment, communication devices, electronic appliances and amusement devices).

The Products are not designed to be radiation tolerant.

While ROHM always makes efforts to enhance the quality and reliability of its Products, a Product may fail or malfunction for a variety of reasons.

Please be sure to implement in your equipment using the Products safety measures to guard against the possibility of physical injury, fire or any other damage caused in the event of the failure of any Product, such as derating, redundancy, fire control and fail-safe designs. ROHM shall bear no responsibility whatsoever for your use of any Product outside of the prescribed scope or not in accordance with the instruction manual.

The Products are not designed or manufactured to be used with any equipment, device or system which requires an extremely high level of reliability the failure or malfunction of which may result in a direct threat to human life or create a risk of human injury (such as a medical instrument, transportation equipment, aerospace machinery, nuclear-reactor controller, fuel-controller or other safety device). ROHM shall bear no responsibility in any way for use of any of the Products for the above special purposes. If a Product is intended to be used for any such special purpose, please contact a ROHM sales representative before purchasing.

If you intend to export or ship overseas any Product or technology specified herein that may be controlled under the Foreign Exchange and the Foreign Trade Law, you will be required to obtain a license or permit under the Law.

Thank you for your accessing to ROHM product informations.
More detail product informations and catalogs are available, please contact your nearest sales office.

ROHM Customer Support System

THE AMERICAS / EUROPE / ASIA / JAPAN

www.rohm.com

Contact us : webmaster@rohm.co.jp

Copyright © 2009 ROHM CO.,LTD.

ROHM Co., Ltd. 21 Saiin Mizosaki-cho, Ukyo-ku, Kyoto 615-8585, Japan
TEL : +81-75-311-2121
FAX : +81-75-315-0172

ROHM SEMICONDUCTOR