DATA SHEET

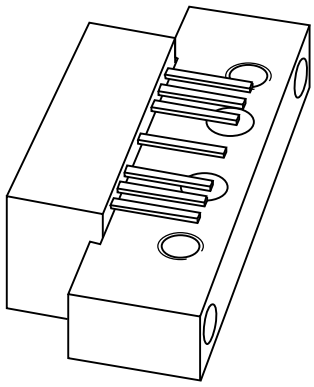

BGY66B

120 MHz, 25 dB gain reverse amplifier

Product specification
Supersedes data of 1997 Apr 14

2001 Oct 18

Philips
Semiconductors

PHILIPS

120 MHz, 25 dB gain reverse amplifier BGY66B

FEATURES

- Excellent linearity
- Extremely low noise
- Silicon nitride passivation
- Rugged construction
- Gold metallization ensures excellent reliability.

APPLICATIONS

- Intended as a reverse amplifier for use in two-way systems.

DESCRIPTION

Hybrid high dynamic range amplifier module designed for applications in CATV systems with a bandwidth of 5 to 120 MHz operating with a voltage supply of 24 V (DC).

PINNING - SOT115J

PIN	DESCRIPTION
1	input
2	common
3	common
5	$+V_B$
7	common
8	common
9	output

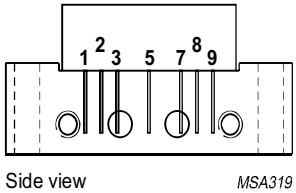

Fig.1 Simplified outline.

QUICK REFERENCE DATA

SYMBOL	PARAMETER	CONDITIONS	MIN.	MAX.	UNIT
G_p	power gain	f = 10 MHz	24.5	25.5	dB
I_{tot}	total current consumption (DC)	V_B = 24 V	115	135	mA

LIMITING VALUES

In accordance with the Absolute Maximum Rating System (IEC 60134).

SYMBOL	PARAMETER	MIN.	MAX.	UNIT
V_i	RF input voltage	–	65	dBmV
T_{stg}	storage temperature	–40	+100	°C
T_{mb}	operating mounting base temperature	–20	+100	°C

CHARACTERISTICS

Table 1 Bandwidth 5 to 120 MHz; V_B = 24 V; T_{mb} = 30 °C; $Z_S = Z_L$ = 75 Ω

SYMBOL	PARAMETER	CONDITIONS	MIN.	MAX.	UNIT
G_p	power gain	f = 10 MHz	24.5	25.5	dB
SL	slope cable equivalent		–0.2	+0.5	dB
FL	flatness of frequency response		–	±0.2	dB
S_{11}	input return losses		20	–	dB
S_{22}	output return losses		20	–	dB
CTB	composite triple beat	14 channels flat; V_o = 48 dBmV; measured at 67.25 MHz	–	–66	dB
X_{mod}	cross modulation	14 channels flat; V_o = 48 dBmV; measured at 67.25 MHz	–	–54	dB
d_2	second order distortion	note 1	–	–70	dB
V_o	output voltage	d_{im} = –60 dB; note 2	60	–	dBmV
F	noise figure	f = 120 MHz	–	5	dB
I_{tot}	total current consumption (DC)	note 3	115	135	mA

Notes

1. f_p = 55.25 MHz; V_p = 48 dBmV;
   f_q = 61.25 MHz; V_q = 48 dBmV;
   measured at $f_p + f_q$ = 116.5 MHz.
2. Measured according to DIN45004B:
   f_p = 111.25 MHz; $V_p = V_o$;
   f_q = 118.25 MHz; $V_q = V_o$ –6 dB;
   f_r = 120.25 MHz; $V_r = V_o$ –6 dB;
   measured at $f_p + f_q - f_r$ = 109.25 MHz.
3. The module normally operates at V_B = 24 V, but is able to withstand supply transients up to 30 V.

PACKAGE OUTLINE

Rectangular single-ended package; aluminium flange; 2 vertical mounting holes; 2 x 6-32 UNC and 2 extra horizontal mounting holes; 7 gold-plated in-line leads **SOT115J**

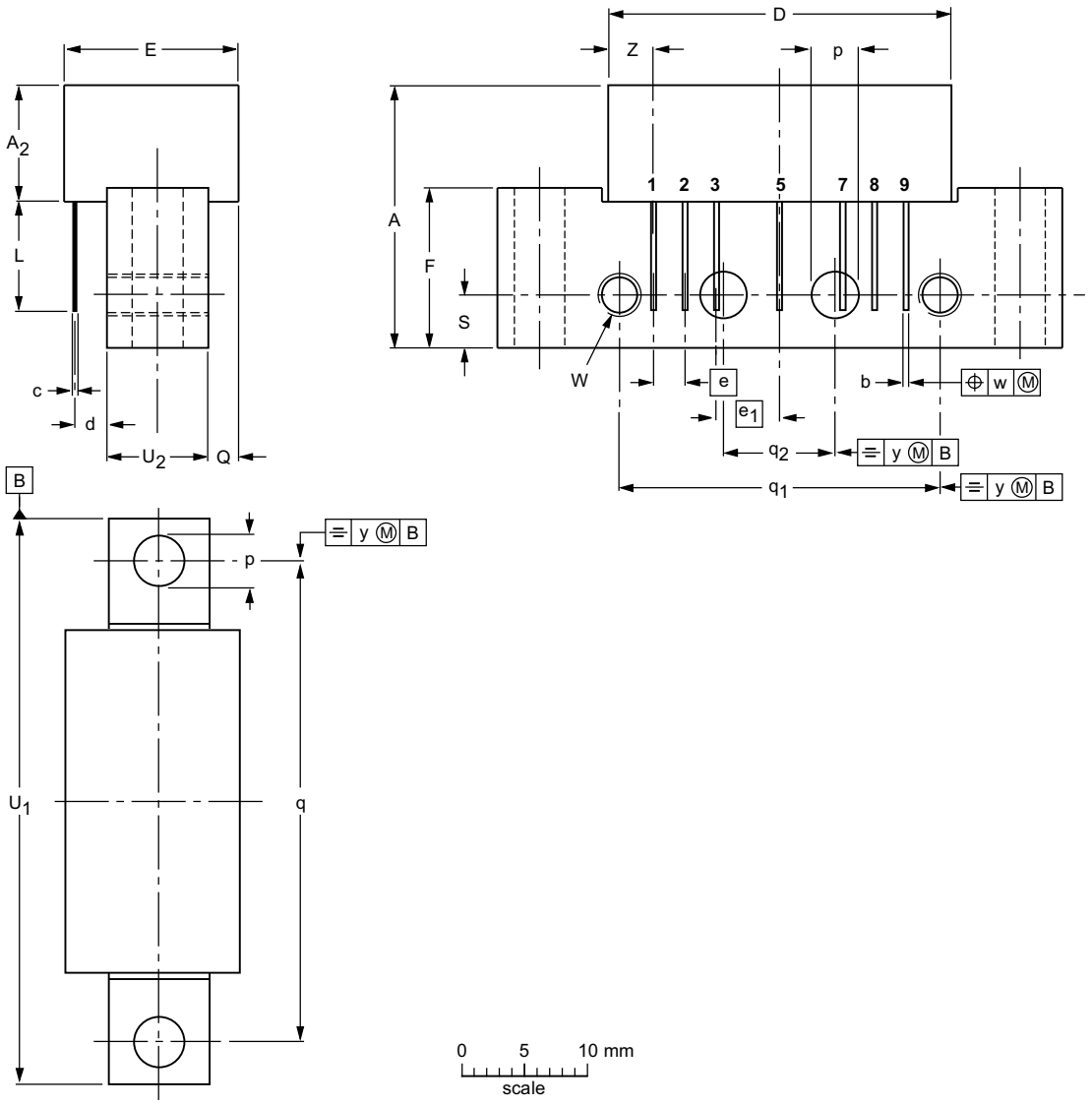

DIMENSIONS (mm are the original dimensions)

UNIT	A max.	A_2 max.	b	c	D max.	d max.	E max.	e	e_1	F	L min.	p	Q max.	q	q_1	q_2	S	U_1 max.	U_2	W	w	y	Z max.
mm	20.8	9.1	0.51 0.38	0.25	27.2	2.54	13.75	2.54	5.08	12.7	8.8	4.15 3.85	2.4	38.1	25.4	10.2	4.2	44.75	8	6-32 UNC	0.25	0.1	3.8

OUTLINE VERSION	REFERENCES				EUROPEAN PROJECTION	ISSUE DATE
	IEC	JEDEC	EIAJ			
SOT115J						99-02-06

DATA SHEET STATUS

DATA SHEET STATUS[1]	PRODUCT STATUS[2]	DEFINITIONS
Objective data	Development	This data sheet contains data from the objective specification for product development. Philips Semiconductors reserves the right to change the specification in any manner without notice.
Preliminary data	Qualification	This data sheet contains data from the preliminary specification. Supplementary data will be published at a later date. Philips Semiconductors reserves the right to change the specification without notice, in order to improve the design and supply the best possible product.
Product data	Production	This data sheet contains data from the product specification. Philips Semiconductors reserves the right to make changes at any time in order to improve the design, manufacturing and supply. Changes will be communicated according to the Customer Product/Process Change Notification (CPCN) procedure SNW-SQ-650A.

Notes

1. Please consult the most recently issued data sheet before initiating or completing a design.
2. The product status of the device(s) described in this data sheet may have changed since this data sheet was published. The latest information is available on the Internet at URL http://www.semiconductors.philips.com.

DEFINITIONS

Short-form specification — The data in a short-form specification is extracted from a full data sheet with the same type number and title. For detailed information see the relevant data sheet or data handbook.

Limiting values definition — Limiting values given are in accordance with the Absolute Maximum Rating System (IEC 60134). Stress above one or more of the limiting values may cause permanent damage to the device. These are stress ratings only and operation of the device at these or at any other conditions above those given in the Characteristics sections of the specification is not implied. Exposure to limiting values for extended periods may affect device reliability.

Application information — Applications that are described herein for any of these products are for illustrative purposes only. Philips Semiconductors make no representation or warranty that such applications will be suitable for the specified use without further testing or modification.

DISCLAIMERS

Life support applications — These products are not designed for use in life support appliances, devices, or systems where malfunction of these products can reasonably be expected to result in personal injury. Philips Semiconductors customers using or selling these products for use in such applications do so at their own risk and agree to fully indemnify Philips Semiconductors for any damages resulting from such application.

Right to make changes — Philips Semiconductors reserves the right to make changes, without notice, in the products, including circuits, standard cells, and/or software, described or contained herein in order to improve design and/or performance. Philips Semiconductors assumes no responsibility or liability for the use of any of these products, conveys no licence or title under any patent, copyright, or mask work right to these products, and makes no representations or warranties that these products are free from patent, copyright, or mask work right infringement, unless otherwise specified.

NOTES

NOTES

Philips Semiconductors – a worldwide company

Contact information

For additional information please visit **http://www.semiconductors.philips.com**. Fax: **+31 40 27 24825**
For sales offices addresses send e-mail to: **sales.addresses@www.semiconductors.philips.com**.

Printed in The Netherlands 613518/03/pp8 Date of release: 2001 Oct 18 Document order number: 9397 750 08798

Let's make things better.

Philips Semiconductors

PHILIPS