SIEMENS

NPN Silicon RF Transistor

BFS 55A

- For low-distortion broadband amplifiers up to 1 GHz at collector currents from 10 mA to 30 mA.

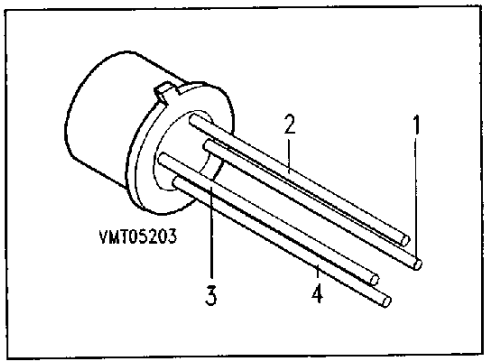

ESD: Electrostatic discharge sensitive device, observe handling precautions!

Type	Marking	Ordering Code	Pin Configuration 1	2	3	4	Package[1]
BFS 55A	BFS 55A	Q62702-F454	E	B	Case	C	TO-72

Maximum Ratings

Parameter	Symbol	Values	Unit
Collector-emitter voltage	V_{CEO}	15	V
Collector-emitter voltage, $V_{BE} = 0$	V_{CES}	20	
Collector-base voltage	V_{CBO}	20	
Emitter-base voltage	V_{EBO}	2.5	
Collector current	I_C	50	mA
Base current	I_B	10	
Total power dissipation, $T_A \leq 25$ °C	P_{tot}	250	mW
Junction temperature	T_j	200	°C
Ambient temperature range	T_A	– 65 ... + 175	
Storage temperature range	T_{stg}	– 65 ... + 175	

Thermal Resistance

Junction - ambient	$R_{th\,JA}$	≤ 700	K/W
Junction - case	$R_{th\,JC}$	≤ 400	

1) For detailed information see chapter Package Outlines.

Electrical Characteristics
at T_A = 25 °C, unless otherwise specified.

Parameter	Symbol	Values			Unit
		min.	typ.	max.	
DC Characteristics					
Collector-emitter breakdown voltage I_C = 1 mA, I_B = 0	$V_{(BR)CE0}$	15	–	–	V
Collector-emitter cutoff current V_{CE} = 20 V, V_{BE} = 0	I_{CES}	–	–	100	µA
Collector-base cutoff current V_{CB} = 10 V, I_E = 0	I_{CB0}	–	–	50	nA
Emitter-base cutoff current V_{EB} = 2.5 V, I_C = 0	I_{EB0}	–	–	100	µA
DC current gain I_C = 25 mA, V_{CE} = 8 V I_C = 50 mA, V_{CE} = 5 V	h_{FE}	 30 30	 – –	 – –	–
AC Characteristics					
Transition frequency I_C = 25 mA, V_{CE} = 8 V, f = 200 MHz	f_T	–	4.5	–	GHz
Collector-base capacitance V_{CB} = 8 V, V_{BE} = v_{be} = 0, f = 1 MHz	C_{cb}	–	0.58	–	pF
Output capacitance V_{CB} = 8 V, I_E = i_e = 0, f = 1 MHz	C_{obo}	–	0.85	–	
Noise figure I_C = 10 mA, V_{CE} = 8 V, f = 10 MHz, Z_S = 75 Ω I_C = 10 mA, V_{CE} = 8 V, f = 800 MHz, Z_S = 60 Ω	F	 – –	 1.7 2.9	 – –	dB
Power gain I_C = 25 mA, V_{CE} = 8 V, f = 800 MHz, Z_S = 60 Ω	G_{pe}	–	10	–	
Linear output voltage two-tone intermodulation test I_C = 25 mA, V_{CE} = 8 V, d_{IM} = 60 dB, f_1 = 806 MHz, f_2 = 810 MHz, Z_S = Z_L = 50 Ω	V_{o1} = V_{o2}	–	350	–	mV
Third order intercept point I_C = 25 mA, V_{CE} = 8 V, f = 800 MHz	IP_3	–	33.5	–	dBm

Total power dissipation $P_{tot} = f(T_A)$

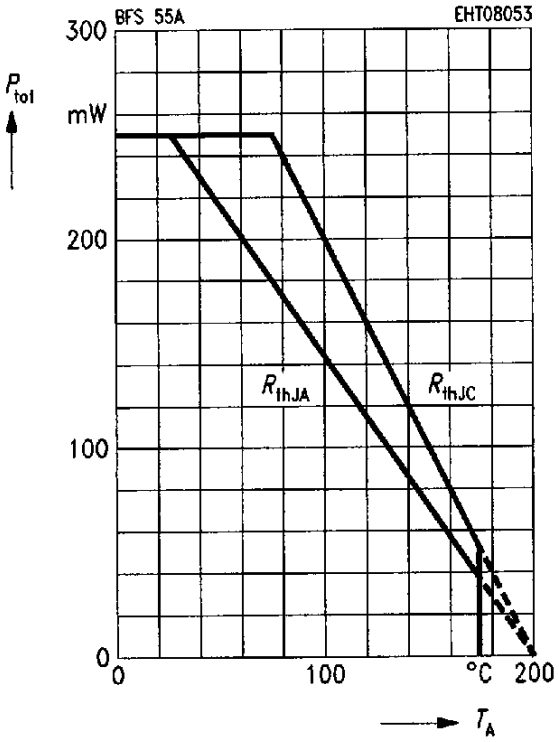

Transition frequency $f_T = f(I_C)$
V_{CE} = 8 V, f = 200 MHz

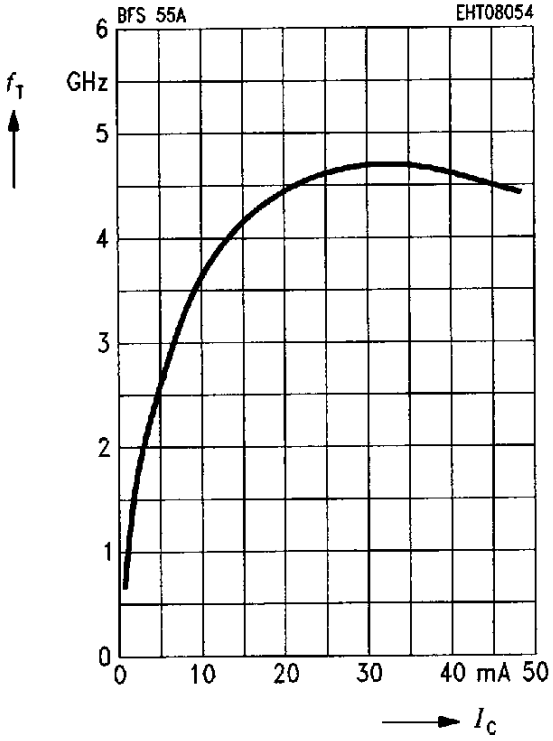

Collector-base capacitance $C_{cb} = f(V_{CB})$
$V_{BE} = v_{be} = 0$, f = 1 MHz

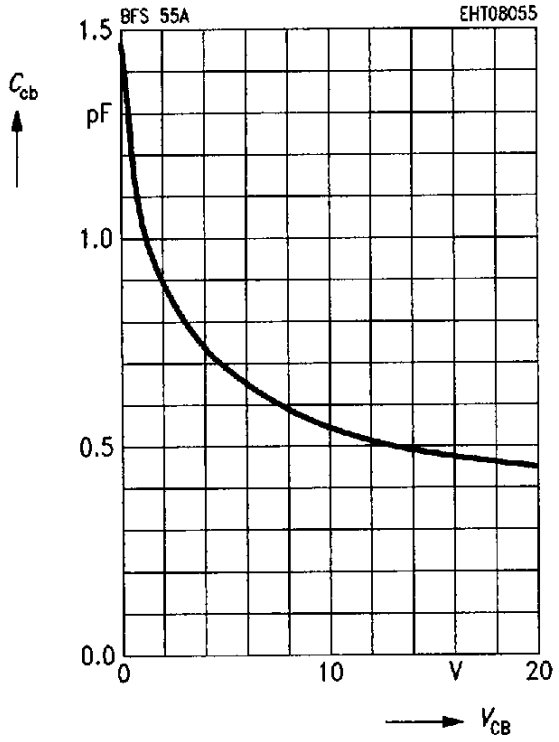

Noise figure $F = f(Z_S)$
V_{CE} = 8 V, f = 10 MHz

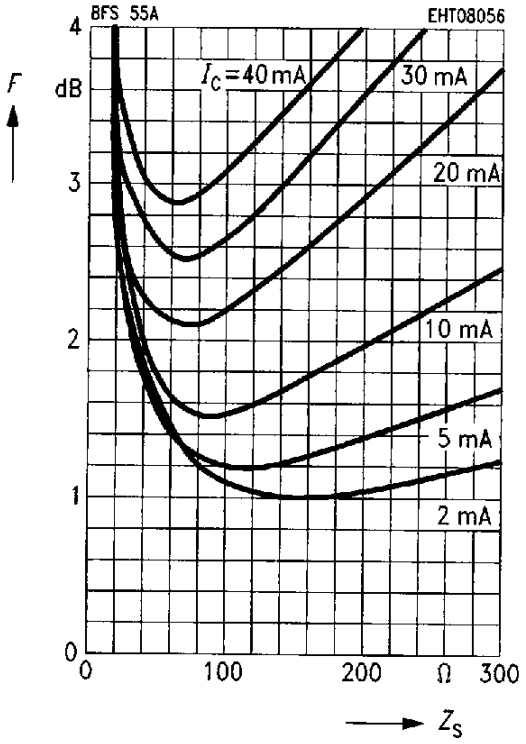

Noise figure $F = f(I_C)$
V_{CE} = 8 V, f = 800 MHz, Z_{Lopt} (G)