UHF VARIABLE CAPACITANCE DIODE

The BB515 is a silicon variable capacitance diode in a hermetically sealed glass envelope and intended intended for application in UHF tuners.

QUICK REFERENCE DATA

Continuous reverse voltage	V_R	max.	30 V
Reverse current at V_R = 30 V	I_R	max.	10 nA
Diode capacitance at f = 1 MHz at V_R = 28 V	C_d		1.85 to 2.25 pF
Capacitance ratio at f = 1 MHz	$\frac{C_d\ (V_R = 1\ V)}{C_d\ (V_R = 28\ V)}$		8 to 9.6
Series resistance at f = 470 MHz; V_R is that value at which C_d = 9 pF	r_s	typ.	0.5 Ω

MECHANICAL DATA

Fig.1 SOD123.

Dimensions in mm

Marking code

BB515 = P

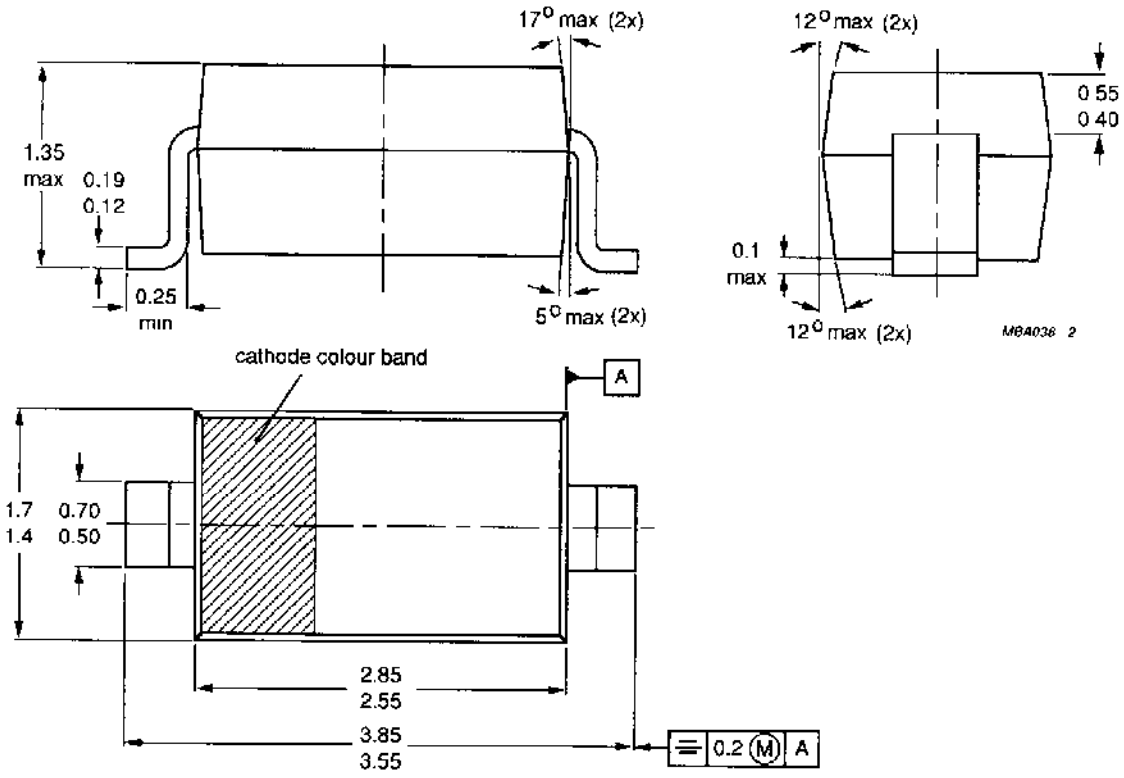

Cathode indicated by a white band.

RATINGS

Limiting values in accordance with the Absolute Maximum System (IEC 134)

Continuous reverse voltage	V_R	max.	30 V
Reverse voltage (peak value)	V_{RM}	max.	30 V
Forward current (DC)	I_F	max.	20 mA
Storage temperature range	T_{stg}		−55 to + 150 °C
Operating ambient temperature range	T_{amb}		−55 to + 125 °C

CHARACTERISTICS

T_{amb} = 25 °C unless otherwise specified

Reverse current			
V_R = 30 V	I_R	max.	10 nA
V_R = 30 V; T_{amb} = 85 °C	I_R	max.	200 nA
Reverse breakdown voltage			
I_R = 10 μA	$V_{(BR)R}$	min.	30 V
Diode capacitance at f = 1 MHz			
V_R = 1 V	C_d		16 to 19.5 pF
V_R = 28 V	C_d		1.85 to 2.25 pF
Capacitance ratio at f = 1 MHz	$\frac{C_d\ (V_R = 1\ V)}{C_d\ (V_R = 28\ V)}$		8 to 9.6
Tolerance of capacitance difference between two diodes of V_R = 0.5 V to 28 V	$\frac{\Delta C}{C}$	max.	3 %
Series resistance at f = 470 MHz and at that value of V_R at which C_d = 9 pF	r_s	typ.	0.5 Ω
Series inductance	L_s	typ.	2.8 nH