Siemens Matsushita Components

EMC Components

SMT Inductors SMD
SIMID 1812-Z

Data Book Supplement

Size 1812/4532 (inch/mm)
Rated inductance 0,22 to 1000 µH
Rated current 0,04 to 0,7 A

Construction

- Ferrite core
- Laser soldered, molded epoxy encapsulation
- Temperature index of wire enamel: 155 °C

Features

- Extended induction range
- High *Q* factor
- Suitable for reflow (IR and vapor phase) and wave soldering
- Different measuring frequencies for *L* and *Q*

Applications

- Filtering of supply voltages, coupling, decoupling
- Antenna systems
- Automotive electronics
- Telecommunications

Terminals

- Tinned
- Base material: phosphor bronze, 2–4 µm Cu, ≥ 5 µm SnPb
- Suitable for soldering and conductive adhesion
- No leaching during wave soldering

Marking

Marking on component:
L value (in µH) and tolerance of *L* value (coded),

Minimum marking on reel:
Manufacturer, part number, ordering code,
L value and tolerance of *L* value,
quantity, date of packing

Delivery mode

12-mm blister tape wound on 178-mm ∅ reel

Dimensional drawing

Size 1812/4532 (inch/mm),
approx. weight 130 mg

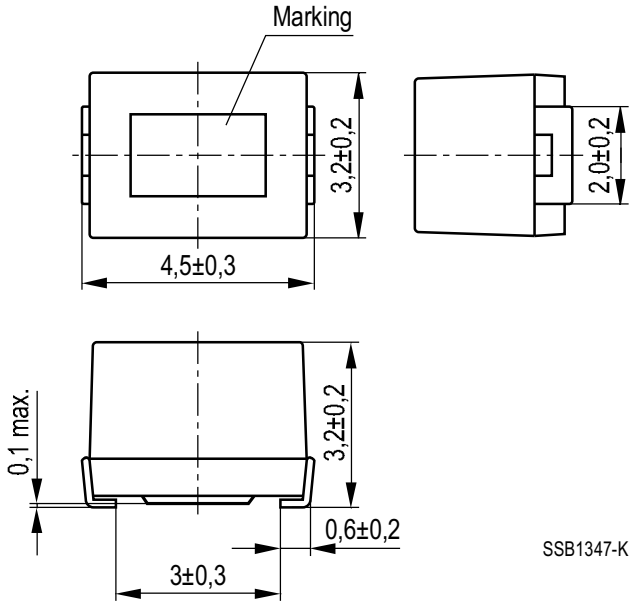

PCB layout recommendation

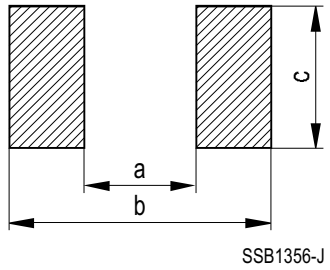

Dimensions (mm)	*a*	*b*	*c*
	2,4...2,6	5,5...6,0	2,0...3,0

Characteristics and ordering codes

For further technical data see page 8.

L_R µH	Tolerance	f_L MHz	Q_{min}	f_Q MHz	I_R mA	R_{max} Ω	$f_{res, min}$ MHz	Ordering code[1)]
0,22	± 20 % ≙ M	1	30	25,2	700	0,30	230	B82432-Z1221-M
0,27		1	30	25,2	650	0,32	200	B82432-Z1271-M
0,33		1	30	25,2	630	0,35	180	B82432-Z1331-M
0,39		1	30	25,2	620	0,37	155	B82432-Z1391-M
0,47		1	30	25,2	580	0,40	135	B82432-Z1471-M
0,56		1	30	25,2	560	0,42	120	B82432-Z1561-M
0,68		1	30	25,2	530	0,48	105	B82432-Z1681-M
0,82		1	30	25,2	500	0,50	90	B82432-Z1821-M
1,0	± 10 % ≙ K	1	30	25,2	470	0,52	80	B82432-Z1102-+
1,2		1	30	25,2	460	0,55	70	B82432-Z1122-+
1,5	± 20 % ≙ M	1	30	25,2	430	0,61	60	B82432-Z1152-+
1,8		1	30	7,96	410	0,61	50	B82432-Z1182-+
2,2	± 5 % ≙ J	1	30	7,96	410	0,61	45	B82432-Z1222-+
2,7		1	50	7,96	400	0,61	43	B82432-Z1272-+
3,3	± 10 % ≙ K	1	50	7,96	380	0,66	39	B82432-Z1332-+
3,9		1	50	7,96	360	0,74	36	B82432-Z1392-+
4,7		1	50	5,0	350	0,81	33	B82432-Z1472-+
5,6		1	50	5,0	330	0,88	30	B82432-Z1562-+
6,8		1	50	5,0	310	1,0	26	B82432-Z1682-+
8,2		1	50	5,0	250	1,6	24	B82432-Z1822-+
10		1	50	5,0	235	1,8	22	B82432-Z1103-+
12		1	50	5,0	225	1,9	20	B82432-Z1123-+
15		1	50	5,0	215	2,1	18	B82432-Z1153-+
18		1	50	2,52	205	2,3	16	B82432-Z1183-+
22		1	50	2,52	195	2,6	15	B82432-Z1223-+
27		1	50	2,52	185	2,9	13	B82432-Z1273-+
33		1	50	2,52	175	3,1	12	B82432-Z1333-+
39		1	50	2,52	165	3,6	10	B82432-Z1393-+
47		1	50	2,52	130	4,2	9,7	B82432-Z1473-+
56		0,1	40	2,52	125	4,7	9,0	B82432-Z1563-+
68		0,1	40	2,52	115	5,3	8,2	B82432-Z1683-+
82		0,1	40	2,52	110	5,9	7,5	B82432-Z1823-+
100		0,1	40	2,52	105	8,8	6,7	B82432-Z1104-+

1) Replace the + by the code letter for the inductance tolerance.

Characteristics and ordering codes

For further technical data see page 8.

L_R µH	Tolerance	f_L MHz	Q_{min}	f_Q MHz	I_R mA	R_{max} Ω	$f_{res, min}$ MHz	Ordering code[1)]
120	± 5 % ≙ J	0,1	40	1,5	100	10	6,1	B82432-Z1124-+
150		0,1	40	1,5	95	11	5,5	B82432-Z1154-+
180	± 10 % ≙ K	0,1	40	1,5	85	13	5,1	B82432-Z1184-+
220		0,1	40	0,796	85	13	4,5	B82432-Z1224-+
270		0,1	40	0,796	80	14	4,1	B82432-Z1274-+
330		0,1	40	0,796	75	16	3,7	B82432-Z1334-+
390		0,1	40	0,796	70	19	3,3	B82432-Z1394-+
470		0,1	30	0,796	55	31	3,3	B82432-Z1474-+
560		0,1	30	0,796	50	35	2,7	B82432-Z1564-+
680		0,1	30	0,796	50	39	2,5	B82432-Z1684-+
820		0,1	30	0,796	45	45	2,4	B82432-Z1824-+
1000		0,1	30	0,796	40	53	2,1	B82432-Z1105-+

1) Replace the + by the code letter for the inductance tolerance.

Taping

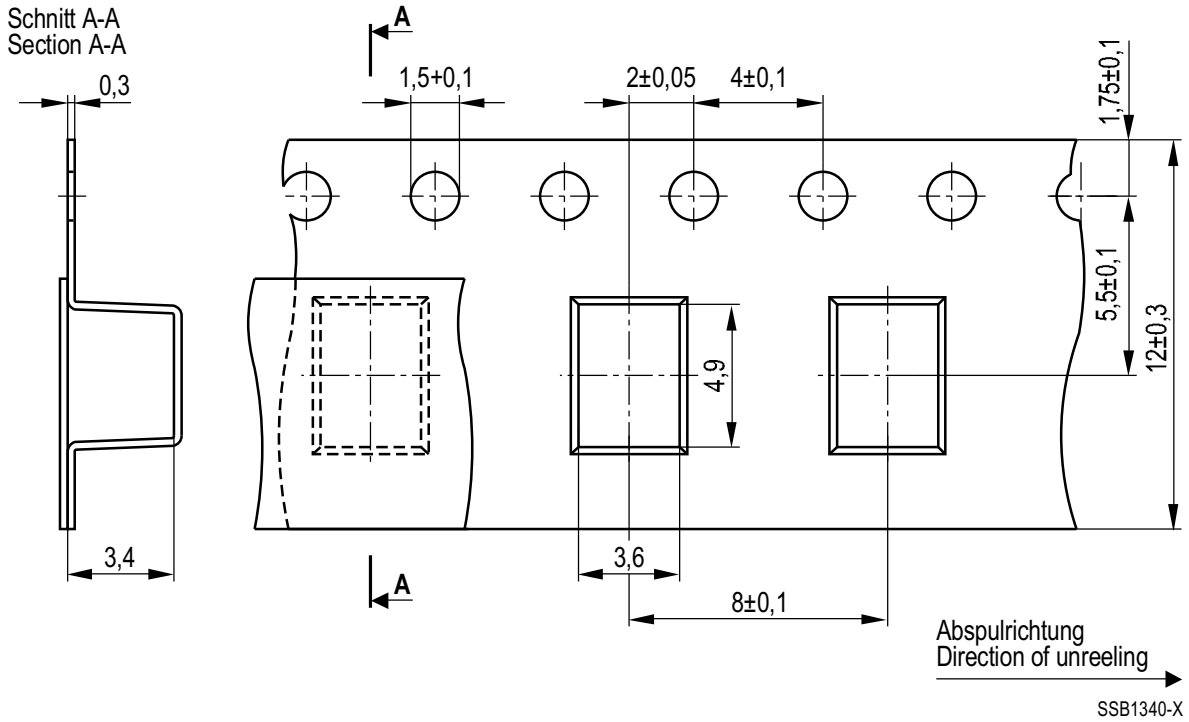

Packing

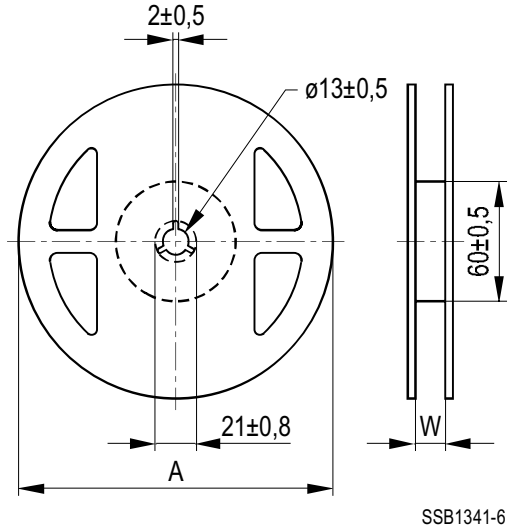

A = 178 ± 2 mm
W = 13 ± 0,3 mm

Packing unit: 500 pcs. per reel

General technical data

Rated inductance L_R	Measured at frequency f_L, with impedance analyzer HP 4194A
Q factor Q_{min}	Measured at frequency f_Q, with impedance analyzer HP 4194A
Rated current I_R	Maximum permissible dc with an inductance decrease of $\Delta L/L_0 \leq 10$ % and/or temperature increase of ≤ 20 K at rated temperature T_R = 85 °C
Self resonance frequency $f_{res,\ min}$	Measured with network analyzer HP 8753D
DC resistance R_{max}	Measured at 20 °C ambient temperature, Measuring current < I_R
Climatic category	In accordance with IEC 68-1 40/085/56 (– 40 °C/+ 85 °C/56 days damp heat test)
Solderability	(230 ± 5) °C, (3 ± 0,5) s Wetting of soldering area: ≥ 90 %
Resistance to soldering heat	In accordance with IEC 68-2-20, test Tb 260 °C, 10 s
Permissible PCB bending	2 mm (100 mm long standard PCB)

Published by Siemens Matsushita Components GmbH & Co. KG
Marketing Kommunikation, Postfach 80 17 09, D-81617 München