AN5276

5 W × 2-ch (19V, 8 Ω) power amplifier with variable audio output and volume control

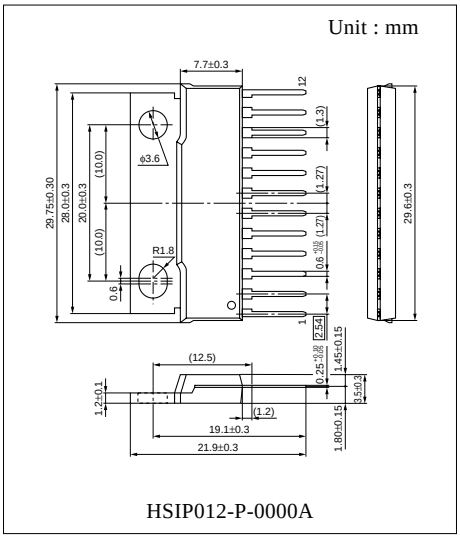

■ Overview

The AN5276 is a monolithic integrated circuit designed for 5.0 W (19 V, 8 Ω) output audio power amplifier. It is a dual channel SEPP IC suitable for stereo operation in TV application.

■ Features

- Few external components :
  - No Boucherot cells(output C, R)
  - No Bootstrap Capacitors
  - No Negative Feeback Capacitors
- Built-in muting circuit
- Built-in stand-by circuit
- Built-in various protection circuits (Load-short, thermal, over-voltage and current)
- High ripple rejection(55 dB)
- Compatible with AN5275, AN5277
- Operating voltage range 10 V to 24 V(19 V typ.)

■ Applications

- TV

■ Block Diagram

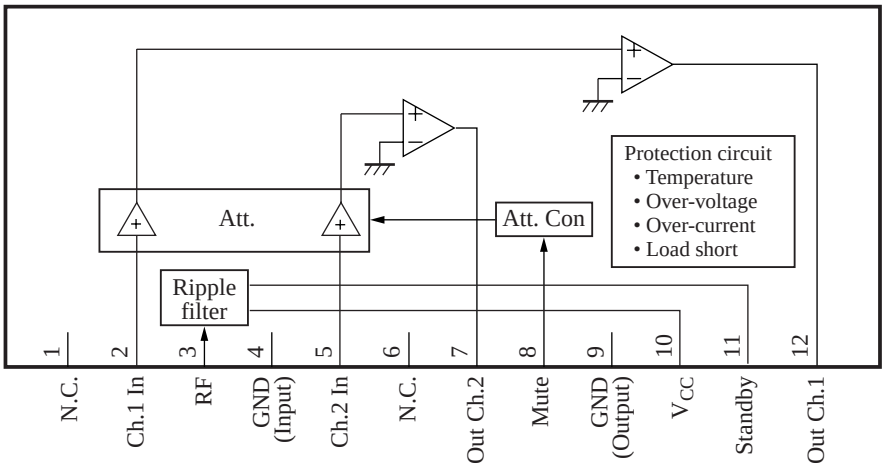

■ Pin Descriptions

Pin No.	Descriptions	Pin No.	Descriptions
1	N.C.	7	Ch.2 output
2	Ch.1 input	8	Mute
3	Ripple filter	9	Output GND
4	Input GND	10	V_{CC}
5	Ch.2 input	11	Standby
6	N.C	12	Ch.1 output

■ Absolute Maximum Ratings

Parameter	Symbol	Rating	Unit
Supply voltage	V_{CC}	26.0	V
Supply current	I_{CC}	4.0	A
Power dissipation *2	P_D	37.5	W
Operating ambient temperature *1	T_{opr}	–25 to +75	°C
Storage temperature *1	T_{stg}	–55 to +150	°C

Note) *1 : Except these items, all other measurements are taken at T_a = 25 °C.
*2 : T_a = 75 °C.

■ Recommended Operating Range

Parameter	Symbol	Range	Unit
Supply voltage	V_{CC}	10.0 to 24.0	V

■ Electrical Characteristics at V_{CC} = 19 V, f = 1 kHz, R_L = 8 Ω, T_a = 25 °C

Parameter	Symbol	Conditions	Min	Typ	Max	Unit
Quiescent current	I_{CQ}	V_{IN} = 0 mV	—	35	70	mA
Output end noise voltage *1	V_{NO}	No input, R_g = 10 kΩ	—	0.22	0.4	mV
Voltage gain	G_V	V_{IN} = 57 mV	32	34	36	dB
Total harmonic distortion	THD	V_{IN} = 57 mV	—	0.2	0.4	%
Maximum Output Power	P_O	V_{CC} = 22 V, THD = 10 %	5.6	7.0	—	W
Maximum Output power	P_O	V_{CC} = 19 V, THD = 10 %	4.0	5.0	—	W
Ripple rejection ratio *1	RR	V_r = 1 V_{rms} f_r = 120 Hz, R_g = 10 kΩ	45	55	—	dB
Channel balance	CB	V_{IN} = 57 mV	–1.0	0	1.0	dB
Muting Ratio	MR	V_{IN} = 57 mV	70	80	—	dB
Muting control voltage	V_{MUTE}	V_{IN} = 57 mV, MR ≥ 70 dB	3.0	—	—	V
Standby control voltage 'on'	$V_{STD\text{-}ON}$	No input, I_{CC} ≤ 0.1 mA	—	—	5.0	V
Standby control voltage 'off'	$V_{STD\text{-}OFF}$	No input, I_{CC} ≥ 17 mA	8.5	—	—	V
Channel crosstalk	CT	V_{IN} = 57 mV, R_g = 10 kΩ	50	60	—	dB

Note) *1 : For this measurement, use the 20 Hz to 20 kHz (12 dB/OCT) filter.

■ Terminal Equivalent Circuits

Pin No.	Equivalent circuit	Description	DC voltage (V)
1	—	Not connected	—
2	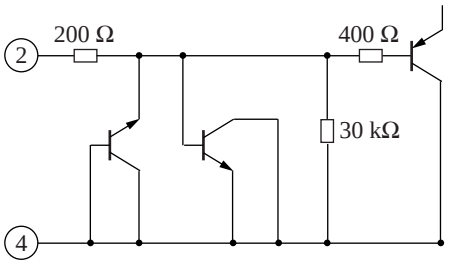	Ch.1 input This is the amplifier input pin.	0
3	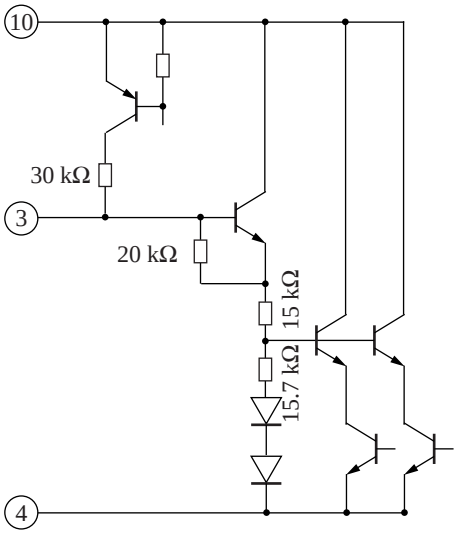	Ripple filter This is the pin to connect the positive terminal of a ripple filter capactior.	V_{CC}-1.5V_{BE}
4	—	Input GND Input ground pin	0
5	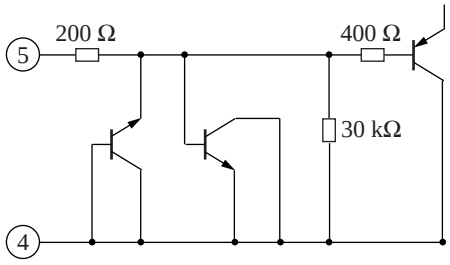	Ch.2 input This is the amplifier input pin.	—
6	—	Not connected	—

■ Terminal Equivalent Circuits (continued)

Pin No.	Equivalent circuit	Description	DC voltage (V)
7	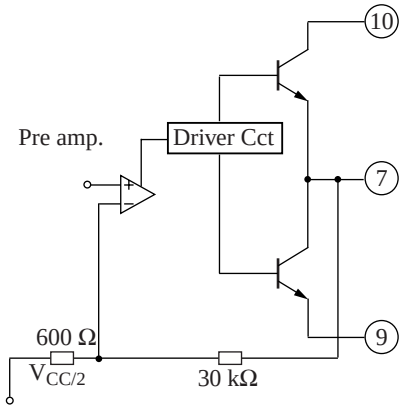	Ch.2 output Ch.2 output pin	$V_{CC}/2$
8	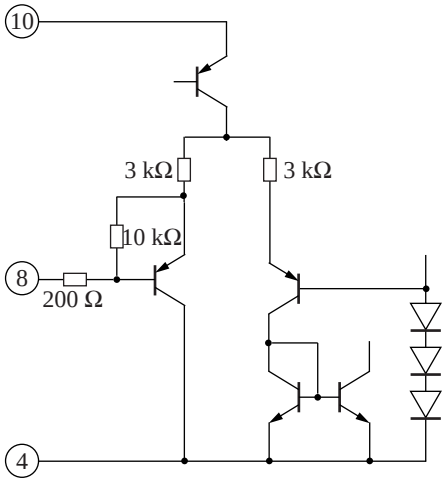	Mute Mute input pin. Mute 'on' = 5 V Mute 'off' = 0 V	—
9	—	Output GND Ch.1 & Ch.2 output ground.	0
10	—	V_{CC} This is the power supply pin.	19 V(typ.)

■ Terminal Equivalent Circuits (continued)

Pin No.	Equivalent circuit	Description	DC voltage (V)
11	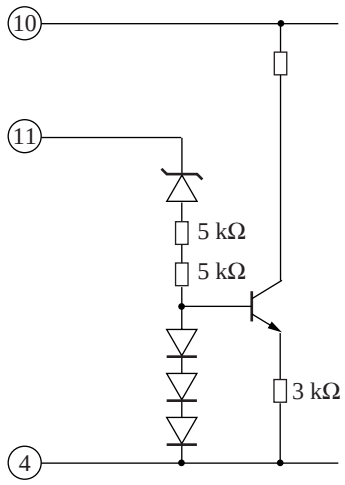	Standby This is the standby control pin.	—
12	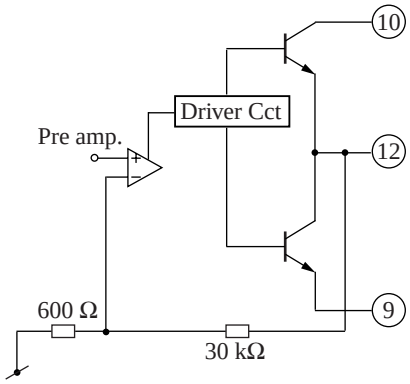	Ch.1 output Ch.1 output pin	$V_{CC}/2$

■ Application Circuit Example

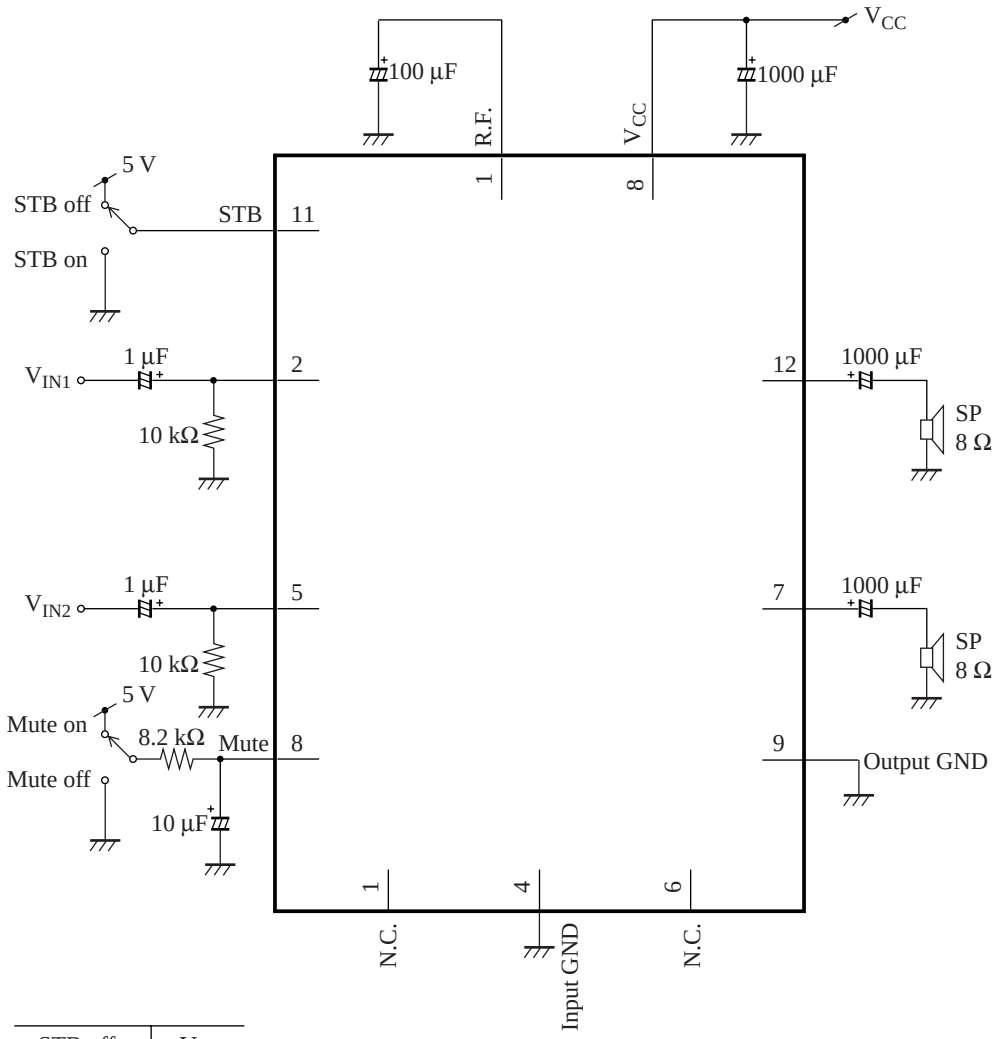

STB off	V_{CC}
STB on	0 V
Mute off	0 V
Mute on	5 V

■ Usage Notes

1) External heatsink is needed when used. External heatsink should be fixed to the chassis.
2) Fin of the IC can be connected to GND.
3) Please prevent output to V_{CC} short and output to GND short.
4) The temperature protection circuit will operate at T_j around 150 °C. However, if temperature decreass, the protection circuit would automatically be deactivated and resume normal operation.

■ Technical Information

- P_D — T_a curves of HSI P012-P-0000A