MODELS 898, 899

Dual-In-Line
Thick Film
Resistor Networks

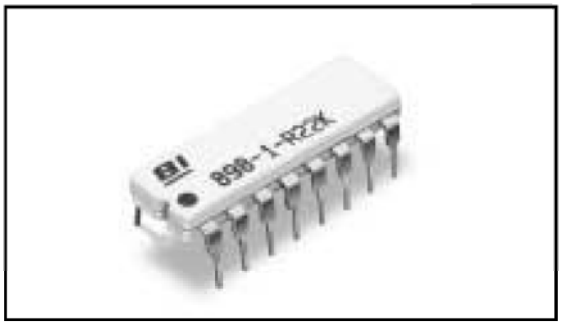

ELECTRICAL

Standard Resistance Range, Ohms *	10 to 10Meg
Standard Resistance Tolerance, at 25°C	±2% (<33 Ohms = ±2 Ohms) Optional: ±1% (F Tol.)
Operating Temperature Range	-55°C to +125°C
Temperature Coefficient of Resistance	±100ppm/°C (<100 Ohms = ±250ppm/°C)
Temperature Coefficient of Resistance Tracking	±50ppm/°C
Maximum Operating Voltage	100Vdc or √PR
Insulation Resistance	≥10,000 Megohms

4

ENVIRONMENTAL (PER MIL-R-83401)

Thermal Shock plus Power Conditioning	ΔR 0.70%
Short Time Overload	ΔR 0.50%
Terminal Strength	ΔR 0.25%
Moisture Resistance	ΔR 0.50%
Mechanical Shock	ΔR 0.25%
Vibration	ΔR 0.25%
Low Temperature Storage	ΔR 0.25%
High Temperature Exposure	ΔR 0.50%
Load Life, 1,000 Hours	ΔR 1.00%
Resistance to Solder Heat (Per MIL-STD-202, Method 210, Cond.B)	ΔR 0.25%
Dielectric Withstanding Voltage	200V rms for 1 minute
Temperature Exposure, Maximum	215°C for 3 minutes
Marking Permanency	MIL-STD-202, Method 215
Lead Solderability	MIL-STD-202, Method 208
Flammability	UL-94V-O Rated
Storage Temperature Range	-55°C to +125°C

* Plus "0 Ohm" jumper

Specifications subject to change without notice.

MECHANICAL

Lead Material	Copper Alloy, 60/40 Tin-Lead (Plating)
Substrate Material	Alumina
Resistor Material	Cermet

APPLICABLE DOCUMENTS

MIL-R-83401 — Resistor Networks, Fixed, Film, General Specifications
MIL-STD-105 — Sampling Procedures and Tables for Inspection by Attributes
MIL-STD-202 — Test Methods for Electronic and Electrical Component Parts

STANDARD RESISTANCE VALUES, OHMS

-3 Circuit (Isolated Resistors) & -1 Circuits (Bussed Resistors)			
22	390	5.6K	100K
27	470	6.8K	120K
33	510	8.2K	150K
39	560	10K	180K
47	680	12K	200K
51	820	15K	220K
56	1K	18K	270K
68	1.2K	20K	330K
82	1.5K	22K	390K
100	1.8K	27K	470K
120	2K	33K	510K
150	2.2K	39K	560K
180	2.7K	47K	680K
200	3.3K	51K	820K
220	3.9K	56K	1Meg
270	4.7K	68K	
330	5.1K	82K	
-5 Circuit (Dual Terminators)			
R1/R2	**R1/R2**	**R1/R2**	**R1/R2**
180/390	220/330	330/470	3K/6.2K
220/270	330/390	330/680	

POWER DISSIPATION, WATTS AT 70°C

		Resistor (Per Circuit)		
Model	**Package**	**-1**	**-3**	**-5**
898	2.0	.125	.250	.125
899	1.8	.125	.250	.125

OUTLINE DIMENSIONS (Inch/mm)

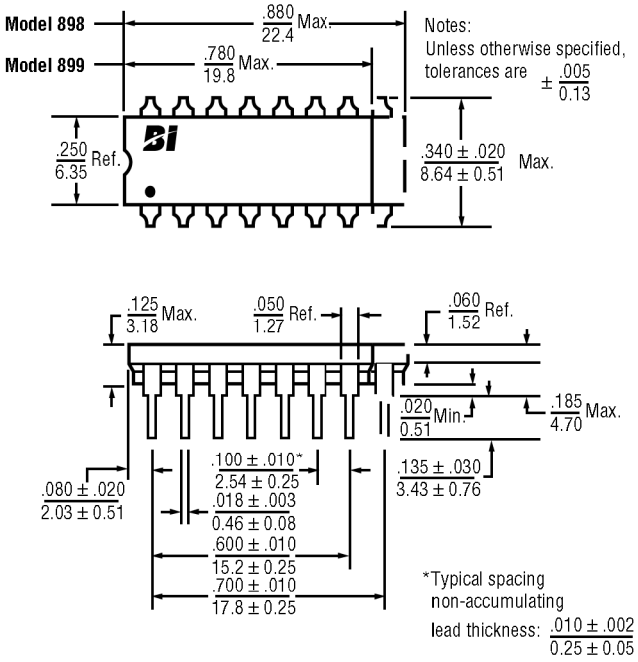

SCHEMATICS

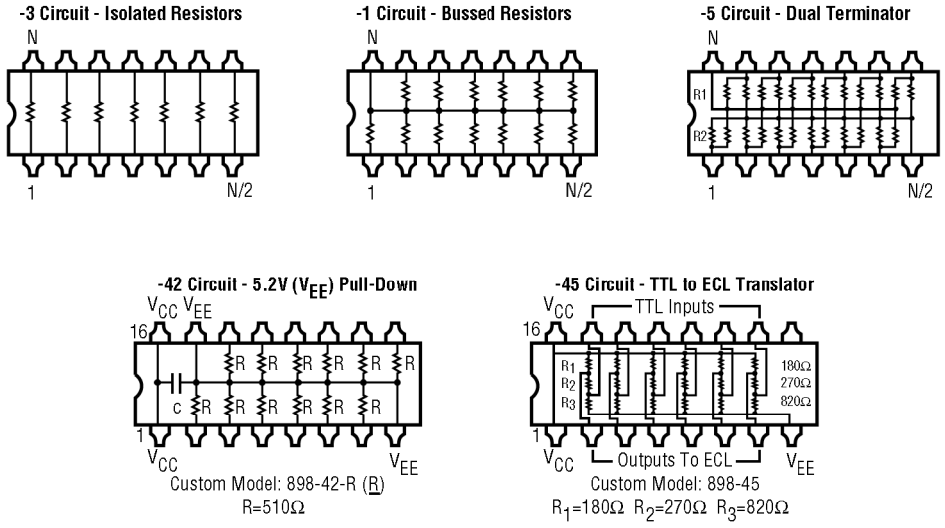

Note: Model 899: N = 114 Leads, Model 898: N = 16 Leads.
Custom circuits are available. Consult Factory.

4

TYPICAL PART MARKING

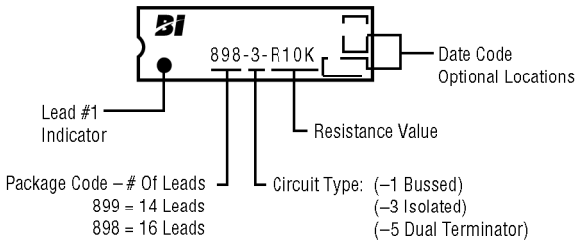

PACKAGING

Standard: Magazines

All Units oriented with lead #1 to the same side.

Magazine:	Material	=	Antistatic Plastic
	Capacity	=	25 Units
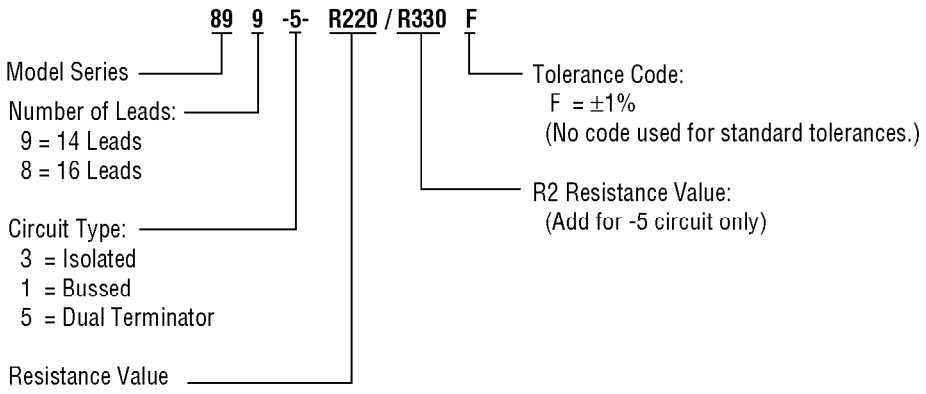
ORDERING INFORMATION