810/811/813/814 Series Circuit Board Mount Enclosed Fuse Holders

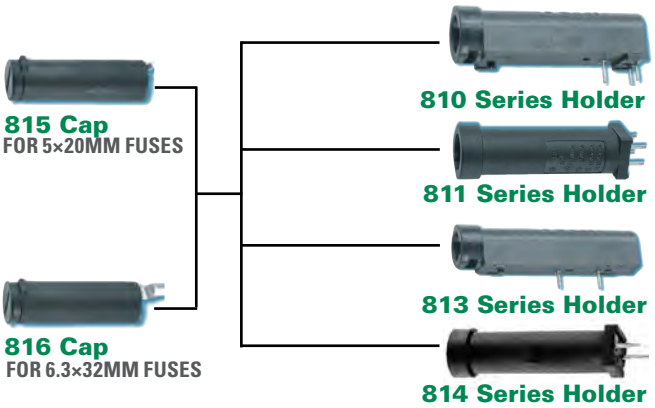

Dimensions

810 Series

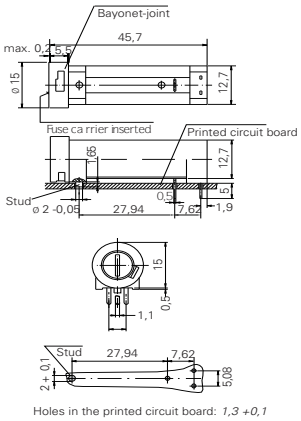

Holes in the printed circuit board: *1,3 +0,1*

811 Series

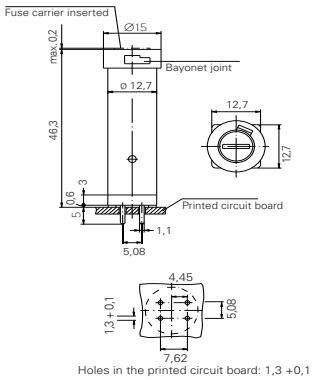

Holes in the printed circuit board: 1,3 +0,1

813 Series

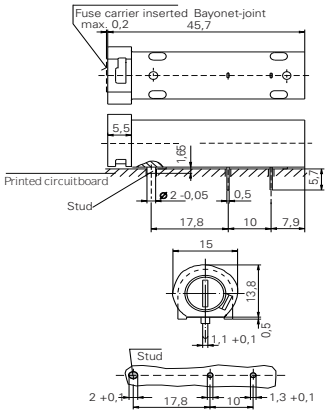

Holes in the printed circuit board: 1,3 +0,1

814 Series

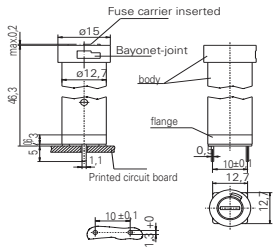

Holes in the printed circuit board: 1,3 +0,1

815/816 Cap

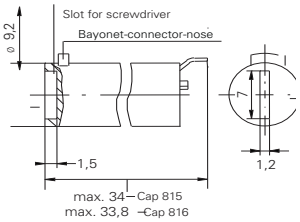

Product Characteristics

	810 Series	811 Series	813 Series	814 Series
Compatible Fuse Types	**5×20mm 6.3×32mm**	**5×20mm 6.3×32mm**	**5×20mm 6.3×32mm**	**5×20mm 6.3×32mm**
Materials	**Holder/Cap:** Black Thermoplastic, UL94 V-0			
	Metal Parts: Copper alloy, corrosion protected			
	Terminals: Solderable, tinned			
Electrical Data (23°C)	**Rated Voltage:** 250V			
	Rated Current: 6.3A (VDE) 16A (UL/CSA)			
	Rated Power: 2.5W (VDE)		**RatedPower:** 1.6W (813+815 - VDE) 2.5W (813+816 - VDE)	**Rated Power:** 2.5W (813+816 - VDE)
Mounting	(3) Solder pins 0.5mm × 1.1mm and plastic stud. The pins spaced at 5.08mm form a common connection.	(4) Solder pins 0.5mm × 1.1mm The pins spaced at 5.08mm form a common connection.	(2) Solder pins 0.5mm × 1.1mm and plastic stud	(2) Solder pins 0.5mm × 1.1mm
Protection Class & Category	IP 40 (IEC 60529) PC2 (IEC 60127-6)			
Operating Temperature	-25 °C to 70 °C			
Climatic Test	-25°C/+70°C/21 days (IEC 60068-2-1...3)			
Stock Conditions	+10°C to +60°C relative humidity ≤ 75% yearly average, without dew, maximum value for 30 days - 95%			
Vibration Resistance	24 cycles at 15 min. each (IEC 60068-2-6) 10 - 60Hz at 0.75mm amplitude 60 - 2000Hz at 10g acceleration			
Contact Resistance	≤ 5mΩ			
Dielectric Strength	> 1.5 kV			
Impulse Voltage	4 kV, 50 Hz, 1 min., dry			
Insulation Resistance	> 10^3 MΩ (500 VDC, 1 min.)			
Solderability	235°C, 3 sec. (Wave) 350°C, 1 sec. (Soldering Iron)			
Soldering Heat Resistance	260°C, 5 sec. (IEC 60068-2-20)			
Min Cross Section	Conducting path - 0.2mm²			
Marking	810, 250V, Approvals	811, 250V, Approvals	813, 250V, Approvals	814, 250V, Approvals
Unit Weight	5.4g(Holder) / 2.5g (Cap)	5.2g(Holder) / 2.5g (Cap)	5.8g (Holder) / 2.5g (Cap)	4.6g (Holder) 25g (Cap)

Agency approvals and ordering information is included on the next page.

© 2015 Littelfuse, Inc.
Specifications are subject to change without notice. Application testing is strongly recommended.

Revised: 06/15/15

Agency Approvals

Agency	Agency File Number			
	810 Series	**811 Series**	**813 Series**	**814 Series**
	118611	120642	118349	118347
	E 70164	E 70164	E70164	E70164
	47574	47574	47574	47574

Ordering Information

Description	Ordering Number	Packaging
Cap, 5×20 mm	815 0000 0005	Bulk 100
Cap, 6.3×32 mm	816 0000 0005	Bulk 100
810 Series Holder	810 0000 0005	Bulk 100
811 Series Holder	811 0000 0005	Bulk 100
813 Series Holder	813 0000 0005	Bulk 100
814 Series Holder	814 0000 0005	Bulk 100

Additional Information

Datasheet 810 Series
Datasheet 811 Series
Datasheet 813 Series
Datasheet 814 Series

Resources 810 Series
Resources 811 Series
Resources 813 Series
Resources 814 Series

Samples 810 Series
Samples 811 Series
Samples 813 Series
Samples 814 Series

© 2015 Littelfuse, Inc.
Specifications are subject to change without notice.
Revised: 06/15/15