Signetics

74LS244, S244
Buffers

Octal Buffers (3-State)
Product Specification

Logic Products

TYPE	TYPICAL PROPAGATION DELAY	TYPICAL SUPPLY CURRENT (TOTAL)
74LS244	12ns	25mA
74S244	6ns	112mA

FUNCTION TABLE

INPUTS				OUTPUTS	
$\overline{OE}_a$	I_a	$\overline{OE}_b$	I_b	Y_a	Y_b
L	L	L	L	L	L
L	H	L	H	H	H
H	X	H	X	(Z)	(Z)

H = HIGH voltage level
L = LOW voltage level
X = Don't care
(Z) = HIGH impedance (off) state

ORDERING CODE

PACKAGES	COMMERCIAL RANGE V_{CC} = 5V ±5%; T_A = 0°C to +70°C
Plastic DIP	N74LS244N, 74S244N
Plastic SOL-20	74LS244D

NOTE:
For information regarding devices processed to Military Specifications, see the Signetics Military Products Data Manual.

INPUT AND OUTPUT LOADING AND FAN-OUT TABLE

PINS	DESCRIPTION	74S	74LS
All	Inputs	1Sul	1LSul
All	Outputs	24Sul	30LSul

NOTE:
A 74S unit load (Sul) is 50μA I_{IH} and −2.0mA I_{IL}, and a 74LS unit load (LSul) is 20μA I_{IH} and −0.4mA I_{IL}.

PIN CONFIGURATION

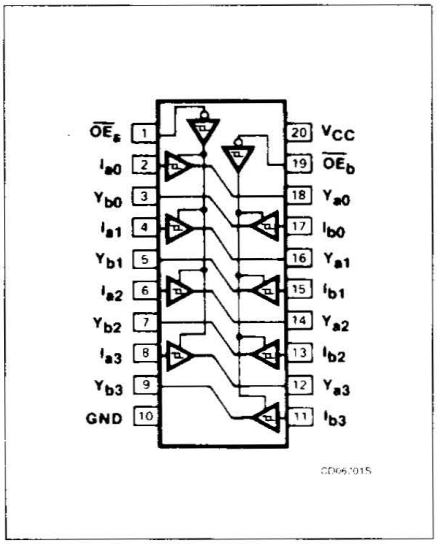

LOGIC SYMBOL

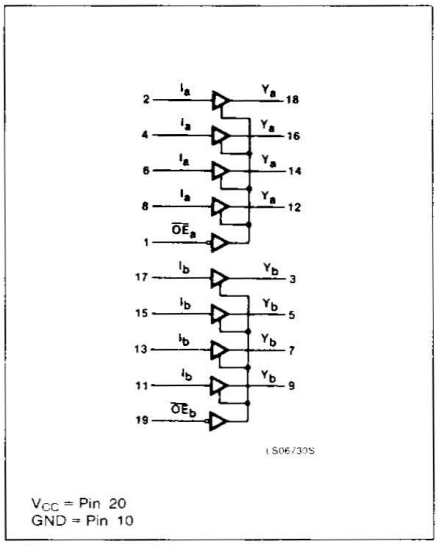

LOGIC SYMBOL (IEEE/IEC)

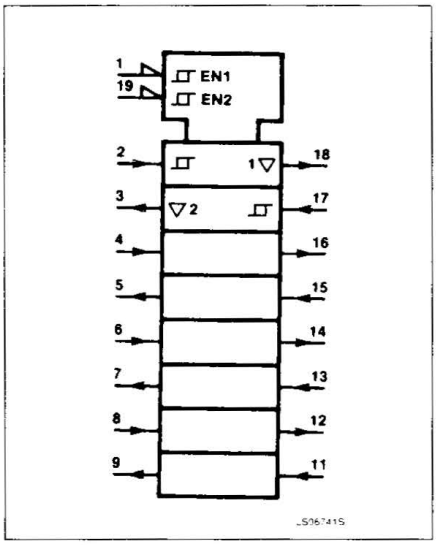

ABSOLUTE MAXIMUM RATINGS (Over operating free-air temperature range unless otherwise noted.)

PARAMETER		74LS	74S	UNIT
V_{CC}	Supply voltage	7.0	7.0	V
V_{IN}	Input voltage	−0.5 to +7.0	−0.5 to +5.5	V
I_{IN}	Input current	−30 to +1	−30 to +5	mA
V_{OUT}	Voltage applied to output in HIGH output state	−0.5 to $+V_{CC}$	−0.5 to $+V_{CC}$	V
T_A	Operating free-air temperature range	0 to 70		°C

RECOMMENDED OPERATING CONDITIONS

PARAMETER		74LS			74S			UNIT
		Min	Nom	Max	Min	Nom	Max	
V_{CC}	Supply voltage	4.75	5.0	5.25	4.75	5.0	5.25	V
V_{IH}	HIGH-level input voltage	2.0			2.0			V
V_{IL}	LOW-level input voltage			+0.8			+0.8	V
I_{IK}	Input clamp current			−18			−18	mA
I_{OH}	HIGH-level output current			−15			−15	mA
I_{OL}	LOW-level output current			24			64	mA
T_A	Operating free-air temperature	0		70	0		70	°C

5

TEST CIRCUITS AND WAVEFORMS

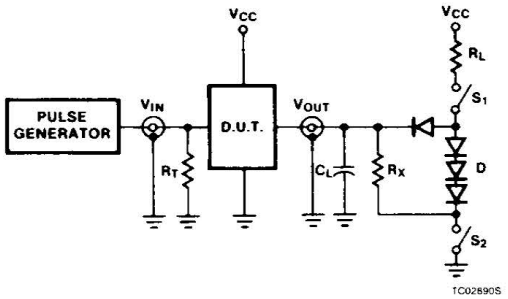

Test Circuit For 3-State Outputs

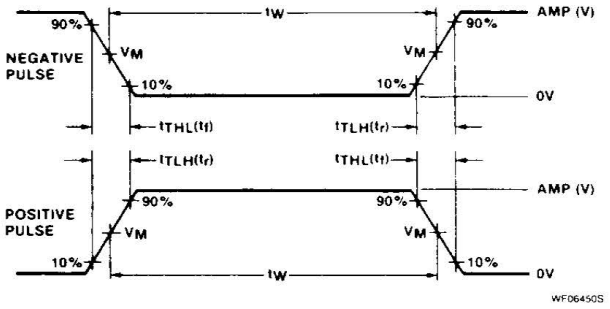

V_M = 1.3V for 74LS; V_M = 1.5V for all other TTL families.

Input Pulse Definition

SWITCH POSITION

TEST	SWITCH 1	SWITCH 2
t_{PZH}	Open	Closed
t_{PZL}	Closed	Open
t_{PHZ}	Closed	Closed
t_{PLZ}	Closed	Closed

FAMILY	INPUT PULSE REQUIREMENTS				
	Amplitude	Rep. Rate	Pulse Width	t_{TLH}	t_{THL}
74	3.0V	1MHz	500ns	7ns	7ns
74LS	3.0V	1MHz	500ns	15ns	6ns
74S	3.0V	1MHz	500ns	2.5ns	2.5ns

DEFINITIONS

R_L = Load resistor to V_{CC}; see AC CHARACTERISTICS for value.

C_L = Load capacitance includes jig and probe capacitance; see AC CHARACTERISTICS for value.

R_T = Termination resistance should be equal to Z_{OUT} of Pulse Generators.

D = Diodes are 1N916, 1N3064, or equivalent.

R_X = 1kΩ for 74, 74S, R_X = 5kΩ for 74LS.

t_{TLH}, t_{THL} Values should be less than or equal to the table entries.

DC ELECTRICAL CHARACTERISTICS (Over recommended operating free-air temperature range unless otherwise noted.)

PARAMETER		TEST CONDITIONS[1]		74LS244			74S244			UNIT
				Min	Typ[2]	Max	Min	Typ[2]	Max	
ΔV_T	Hysteresis ($V_{T+} - V_{T-}$)	V_{CC} = MIN		0.2	0.4		0.2	0.4		V
V_{OH}	HIGH-level output voltage	V_{CC} = MIN, V_{IH} = MIN, V_{IL} = 0.5V, I_{OH} = MAX		2.0			2.0			V
		V_{CC} = MIN, V_{IH} = MIN, V_{IL} = MAX, I_{OH} = MAX		2.4	3.4		2.4			V
V_{OL}	LOW-level output voltage	V_{CC} = MIN, V_{IH} = MIN, V_{IL} = MAX	I_{OL} = MAX			0.5			0.55	V
			I_{OL} = 12mA (74LS)			0.4				V
V_{IK}	Input clamp voltage	V_{CC} = MIN, $I_I = I_{IK}$				−1.5			−1.2	V
I_{OZH}	Off-state output current, HIGH-level voltage applied	V_{CC} = MAX, V_{IH} = MIN, V_{IL} = MAX	V_O = 2.7V			20				μA
			V_O = 2.4V						50	μA
I_{OZL}	Off-state output current, LOW-level voltage applied	V_{CC} = MAX, V_{IH} = MIN, V_{IL} = MAX	V_O = 0.4V			−20				μA
			V_O = 0.5V						−50	μA
I_I	Input current at maximum input voltage	V_{CC} = MAX	V_I = 5.5V						1.0	mA
			V_I = 7.0V			0.1				mA
I_{IH}	HIGH-level input current	V_{CC} = MAX, V_I = 2.7V				20			50	μA
I_{IL}	LOW-level input current	V_{CC} = MAX	V_I = 0.4V			−0.2				mA
			V_I = 0.5V, $\overline{OE}$ inputs						−2.0	mA
			V_I = 0.5V, Other inputs						−0.4	mA
I_{OS}	Short-circuit output current[3]	V_{CC} = MAX		−40		−130	−80		−180	mA
I_{CC}	Supply current[4] (total)	V_{CC} = MAX	I_{CCH} Outputs HIGH		17	27		95	160	mA
			I_{CCL} Outputs LOW		27	46		120	180	mA
			I_{CCZ} Outputs OFF		32	54		120	180	mA

NOTES:
1. For conditions shown as MIN or MAX, use the appropriate value specified under recommended operating conditions for the applicable type.
2. All typical values are at V_{CC} = 5V, T_A = 25°C.
3. I_{OS} is tested with V_{OUT} = +0.5V and V_{CC} = V_{CC} MAX + 0.5V. Not more than one output should be shorted at a time and duration of the short circuit should not exceed one second.
4. I_{CC} is measured with outputs open.

AC ELECTRICAL CHARACTERISTICS T_A = 25°C, V_{CC} = 5.0V

PARAMETER		TEST CONDITIONS	74LS		74S		UNIT
			C_L = 45pF, R_L = 667Ω		C_L = 50pF, R_L = 90Ω		
			Min	Max	Min	Max	
t_{PLH}	Propagation delay	Waveform 1		18		9	ns
t_{PHL}	Propagation delay	Waveform 1		18		9	ns
t_{PZH}	Enable to HIGH	Waveform 2		23		12	ns
t_{PZL}	Enable to LOW	Waveform 3		30		15	ns
t_{PHZ}	Disable from HIGH	Waveform 2, C_L = 5pF		18		9	ns
t_{PLZ}	Disable from LOW	Waveform 3, C_L = 5pF		25		15	ns

AC WAVEFORMS

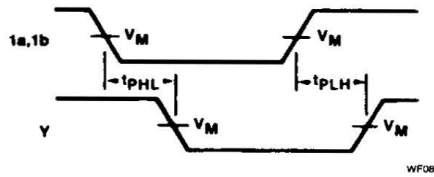

Waveform 1. Waveform For Non-Inverting Outputs

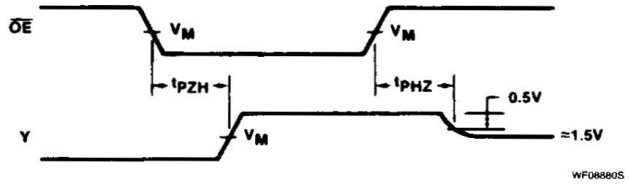

Waveform 2. 3-State Enable Time To High Level And Disable Time From High Level

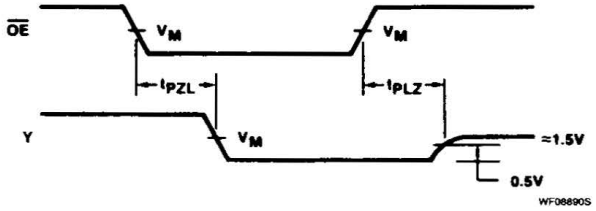

For all waveforms, V_M = 1.3V for 74LS, V_M = 1.5V for all other TTL families.

Waveform 3. 3-State Enable Time To Low Level And Disable Time From Low Level

5