FAIRCHILD SEMICONDUCTOR®

November 1988
Revised February 2005

74AC04 • 74ACT04 Hex Inverter

General Description

The AC/ACT04 contains six inverters.

Features

- I_{CC} reduced by 50% on 74AC only
- Outputs source/sink 24 mA
- ACT04 has TTL-compatible inputs

Ordering Code:

Order Number	Package Number	Package Description
74AC04SC	M14A	14-Lead Small Outline Integrated Circuit (SOIC), JEDEC MS-012, 0.150" Narrow
74AC04SCX_NL (Note 1)	M14A	Pb-Free 14-Lead Small Outline Integrated Circuit (SOIC), JEDEC MS-012, 0.150" Narrow
74AC04SJ	M14D	Pb-Free 14-Lead Small Outline Package (SOP), EIAJ TYPE II, 5.3mm Wide
74AC04MTC	MTC14	14-Lead Thin Shrink Small Outline Package (TSSOP), JEDEC MO-153, 4.4mm Wide
74AC04MTCX_NL (Note 1)	MTC14	Pb-Free 14-Lead Thin Shrink Small Outline Package (TSSOP), JEDEC MO-153, 4.4mm Wide
74AC04PC	N14A	14-Lead Plastic Dual-In-Line Package (PDIP), JEDEC MS-001, 0.300" Wide
74ACT04SC	M14A	14-Lead Small Outline Integrated Circuit (SOIC), JEDEC MS-012, 0.150" Narrow
74ACT04SCX_NL (Note 1)	M14A	Pb-Free 14-Lead Small Outline Integrated Circuit (SOIC), JEDEC MS-012, 0.150" Narrow
74ACT04MTC	MTC14	14-Lead Thin Shrink Small Outline Package (TSSOP), JEDEC MO-153, 4.4mm Wide
74ACT04MTCX_NL (Note 1)	MTC14	Pb-Free 14-Lead Thin Shrink Small Outline Package (TSSOP), JEDEC MO-153, 4.4mm Wide
74ACT04PC	N14A	14-Lead Plastic Dual-In-Line Package (PDIP), JEDEC MS-001, 0.300" Wide

Device also available in Tape and Reel. Specify by appending suffix letter "X" to the ordering code. (PC not available in Tape and Reel.)
Pb-Free package per JEDEC J-STD-020B.

Note 1: "_NL" indicates Pb-Free package (per JEDEC J-STD-020B). Device available in Tape and Reel only.

Logic Symbol

IEEE/IEC

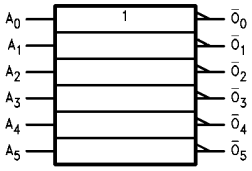

Connection Diagram

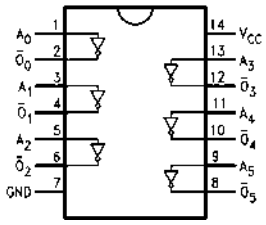

Pin Descriptions

Pin Names	Description
A_n	Inputs
$\bar{O}_n$	Outputs

FACT™ is a trademark of Fairchild Semiconductor Corporation.

Absolute Maximum Ratings (Note 2)

Supply Voltage (V_{CC})	−0.5V to +7.0V
DC Input Diode Current (I_{IK})	
$V_I = -0.5V$	−20 mA
$V_I = V_{CC} + 0.5V$	+20 mA
DC Input Voltage (V_I)	−0.5V to V_{CC} + 0.5V
DC Output Diode Current (I_{OK})	
$V_O = -0.5V$	−20 mA
$V_O = V_{CC} + 0.5V$	+20 mA
DC Output Voltage (V_O)	−0.5V to V_{CC} + 0.5V
DC Output Source or Sink Current (I_O)	±50 mA
DC V_{CC} or Ground Current per Output Pin (I_{CC} or I_{GND})	±50 mA
Storage Temperature (T_{STG})	−65°C to +150°C
Junction Temperature (T_J)	
PDIP	140°C

Recommended Operating Conditions

Supply Voltage (V_{CC})	
AC	2.0V to 6.0V
ACT	4.5V to 5.5V
Input Voltage (V_I)	0V to V_{CC}
Output Voltage (V_O)	0V to V_{CC}
Operating Temperature (T_A)	−40°C to +85°C
Minimum Input Edge Rate ($\Delta V/\Delta t$)	
AC Devices	
V_{IN} from 30% to 70% of V_{CC}	
V_{CC} @ 3.3V, 4.5V, 5.5V	125 mV/ns
Minimum Input Edge Rate ($\Delta V/\Delta t$)	
ACT Devices	
V_{IN} from 0.8V to 2.0V	
V_{CC} @ 4.5V, 5.5V	125 mV/ns

Note 2: Absolute maximum ratings are those values beyond which damage to the device may occur. The databook specifications should be met, without exception, to ensure that the system design is reliable over its power supply, temperature, and output/input loading variables. Fairchild does not recommend operation of FACT™ circuits outside databook specifications.

DC Electrical Characteristics for AC

Symbol	Parameter	V_{CC} (V)	$T_A = +25°C$ Typ	$T_A = -40°C$ to $+85°C$ Guaranteed Limits		Units	Conditions
V_{IH}	Minimum HIGH Level Input Voltage	3.0	1.5	2.1	2.1	V	$V_{OUT} = 0.1V$ or $V_{CC} - 0.1V$
		4.5	2.25	3.15	3.15		
		5.5	2.75	3.85	3.85		
V_{IL}	Maximum LOW Level Input Voltage	3.0	1.5	0.9	0.9	V	$V_{OUT} = 0.1V$ or $V_{CC} - 0.1V$
		4.5	2.25	1.35	1.35		
		5.5	2.75	1.65	1.65		
V_{OH}	Minimum HIGH Level Output Voltage	3.0	2.99	2.9	2.9	V	$I_{OUT} = -50\ \mu A$
		4.5	4.49	4.4	4.4		
		5.5	5.49	5.4	5.4		
							$V_{IN} = V_{IL}$ or V_{IH}
		3.0		2.56	2.46	V	$I_{OH} = -12$ mA
		4.5		3.86	3.76		$I_{OH} = -24$ mA
		5.5		4.86	4.76		$I_{OH} = -24$ mA (Note 3)
V_{OL}	Maximum LOW Level Output Voltage	3.0	0.002	0.1	0.1	V	$I_{OUT} = 50\ \mu A$
		4.5	0.001	0.1	0.1		
		5.5	0.001	0.1	0.1		
							$V_{IN} = V_{IL}$ or V_{IH}
		3.0		0.36	0.44	V	$I_{OL} = 12$ mA
		4.5		0.36	0.44		$I_{OL} = 24$ mA
		5.5		0.36	0.44		$I_{OL} = 24$ mA (Note 3)
I_{IN} (Note 5)	Maximum Input Leakage Current	5.5		±0.1	±1.0	μA	$V_I = V_{CC}$, GND
I_{OLD}	Minimum Dynamic Output Current (Note 4)	5.5			75	mA	$V_{OLD} = 1.65V$ Max
I_{OHD}		5.5			−75	mA	$V_{OHD} = 3.85V$ Min
I_{CC} (Note 5)	Maximum Quiescent Supply Current	5.5		2.0	20.0	μA	$V_{IN} = V_{CC}$ or GND

Note 3: All outputs loaded; thresholds on input associated with output under test.

Note 4: Maximum test duration 2.0 ms, one output loaded at a time.

Note 5: I_{IN} and I_{CC} @ 3.0V are guaranteed to be less than or equal to the respective limit @ 5.5V V_{CC}.

DC Electrical Characteristics for ACT

Symbol	Parameter	V_{CC} (V)	$T_A = +25°C$ Typ	$T_A = +25°C$ Guaranteed Limits	$T_A = -40°C$ to $+85°C$ Guaranteed Limits	Units	Conditions
V_{IH}	Minimum HIGH Level Input Voltage	4.5	1.5	2.0	2.0	V	$V_{OUT} = 0.1V$ or $V_{CC} - 0.1V$
		5.5	1.5	2.0	2.0		
V_{IL}	Maximum LOW Level Input Voltage	4.5	1.5	0.8	0.8	V	$V_{OUT} = 0.1V$ or $V_{CC} - 0.1V$
		5.5	1.5	0.8	0.8		
V_{OH}	Minimum HIGH Level Output Voltage	4.5	4.49	4.4	4.4	V	$I_{OUT} = -50\ \mu A$
		5.5	5.49	5.4	5.4		
		4.5		3.86	3.76	V	$V_{IN} = V_{IL}$ or V_{IH} $I_{OH} = -24$ mA
		5.5		4.86	4.76		$I_{OH} = -24$ mA (Note 6)
V_{OL}	Maximum LOW Level Output Voltage	4.5	0.001	0.1	0.1	V	$I_{OUT} = 50\ \mu A$
		5.5	0.001	0.1	0.1		
		4.5		0.36	0.44	V	$V_{IN} = V_{IL}$ or V_{IH} $I_{OL}0 = 24$ mA
		5.5		0.36	0.44		$I_{OL} = 24$ mA (Note 6)
I_{IN}	Maximum Input Leakage Current	5.5		±0.1	±1.0	μA	$V_I = V_{CC}$, GND
I_{CCT}	Maximum I_{CC}/Input	5.5	0.6		1.5	mA	$V_I = V_{CC} - 2.1V$
I_{OLD}	Minimum Dynamic Output Current (Note 7)	5.5			75	mA	$V_{OLD} = 1.65V$ Max
I_{OHD}		5.5			–75	mA	$V_{OHD} = 3.85V$ Min
I_{CC}	Maximum Quiescent Supply Current	5.5		4.0	40.0	μA	$V_{IN} = V_{CC}$ or GND

Note 6: All outputs loaded; thresholds on input associated with output under test.

Note 7: Maximum test duration 2.0 ms, one output loaded at a time.

AC Electrical Characteristics for AC

Symbol	Parameter	V_{CC} (V) (Note 8)	$T_A = +25°C$ $C_L = 50$ p Min	Typ	Max	$T_A = -40°C$ to $+85°C$ $C_L = 50$ pF Min	Max	Units
t_{PLH}	Propagation Delay	3.3	1.5	4.5	9.0	1.0	10.0	ns
		5.0	1.5	4.0	7.0	1.0	7.5	
t_{PHL}	Propagation Delay	3.3	1.5	4.5	8.5	1.0	9.5	ns
		5.0	1.5	3.5	6.5	1.0	7.0	

Note 8: Voltage Range 3.3 is 3.3V ± 0.3V
Voltage Range 5.0 is 5.0V ± 0.5V

AC Electrical Characteristics for ACT

Symbol	Parameter	V_{CC} (V) (Note 9)	$T_A = +25°C$ $C_L = 50$ pF Min	Typ	Max	$T_A = -40°C$ to $+85°C$ $C_L = 50$ pF Min	Max	Units
t_{PLH}	Propagation Delay	5.0	1.0	6.0	8.5	1.0	9.0	ns
t_{PHL}	Propagation Delay	5.0	1.0	5.5	8.0	1.0	8.5	ns

Note 9: Voltage Range 5.0 is 5.0V ± 0.5V

Capacitance

Symbol	Parameter	Typ	Units	Conditions
C_{IN}	Input Capacitance	4.5	pF	V_{CC} = OPEN
V_{CC}	Power Dissipation Capacitance	30.0	pF	V_{CC} = 5.0V

Physical Dimensions inches (millimeters) unless otherwise noted

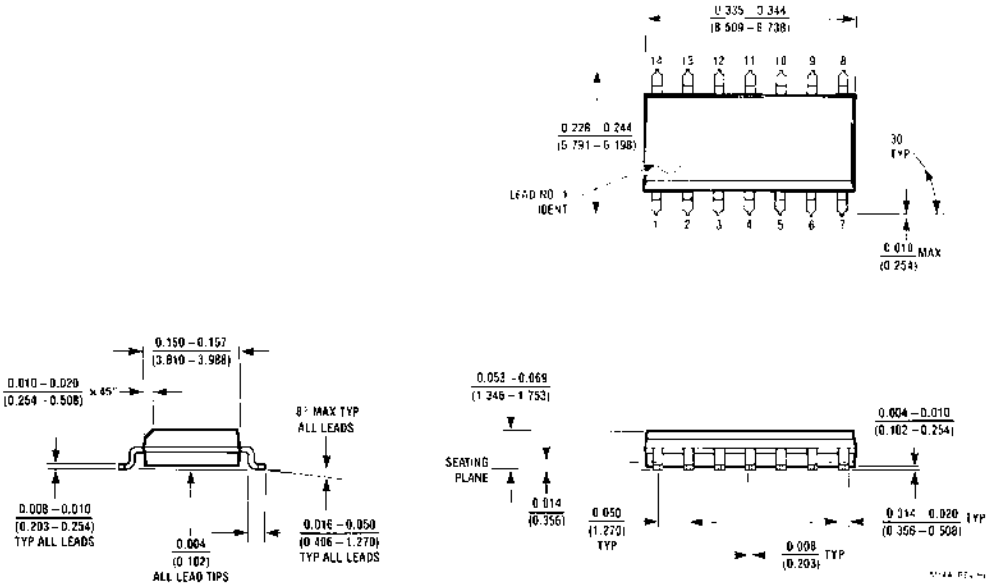

14-Lead Small Outline Integrated Circuit (SOIC), JEDEC MS-012, 0.150" Narrow
Package Number M14A

Physical Dimensions inches (millimeters) unless otherwise noted (Continued)

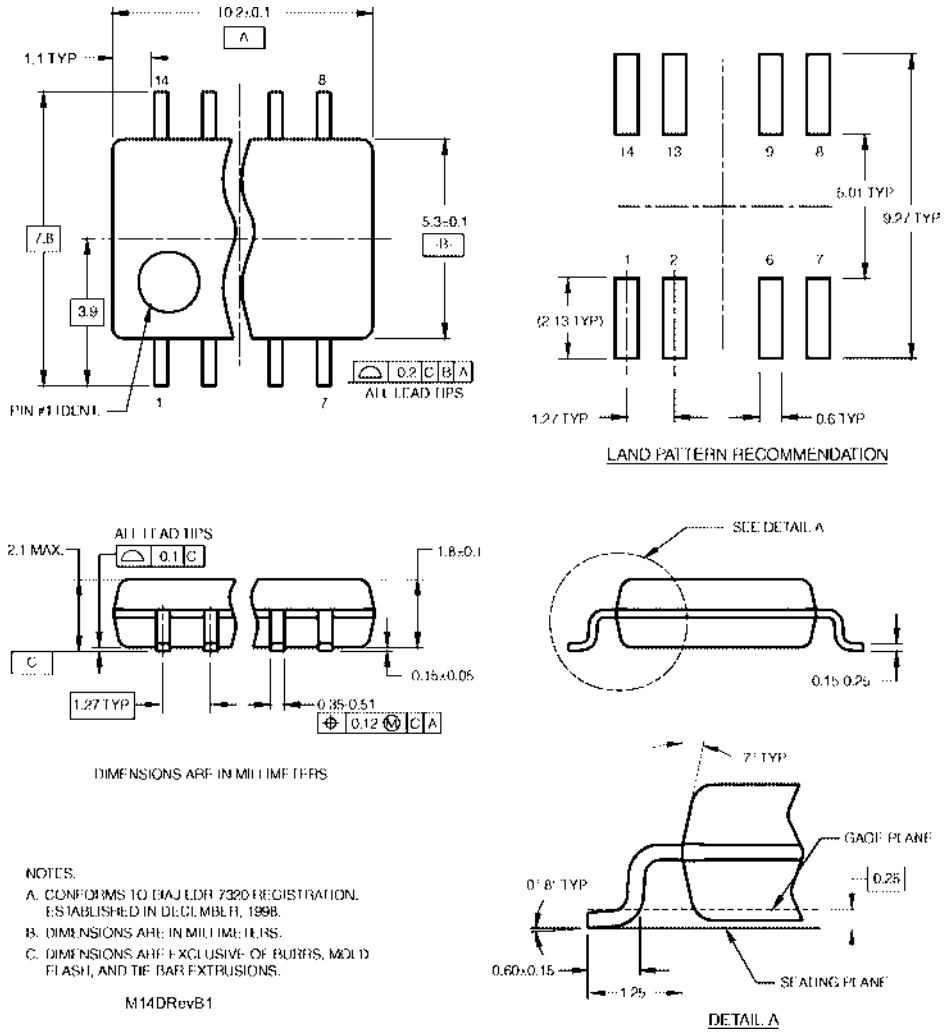

NOTES:

A. CONFORMS TO EIAJ EDR 7320 REGISTRATION, ESTABLISHED IN DECEMBER, 1998.

B. DIMENSIONS ARE IN MILLIMETERS.

C. DIMENSIONS ARE EXCLUSIVE OF BURRS, MOLD FLASH, AND TIE BAR EXTRUSIONS.

M14DRevB1

Pb-Free 14-Lead Small Outline Package (SOP), EIAJ TYPE II, 5.3mm Wide
Package Number M14D

Physical Dimensions inches (millimeters) unless otherwise noted (Continued)

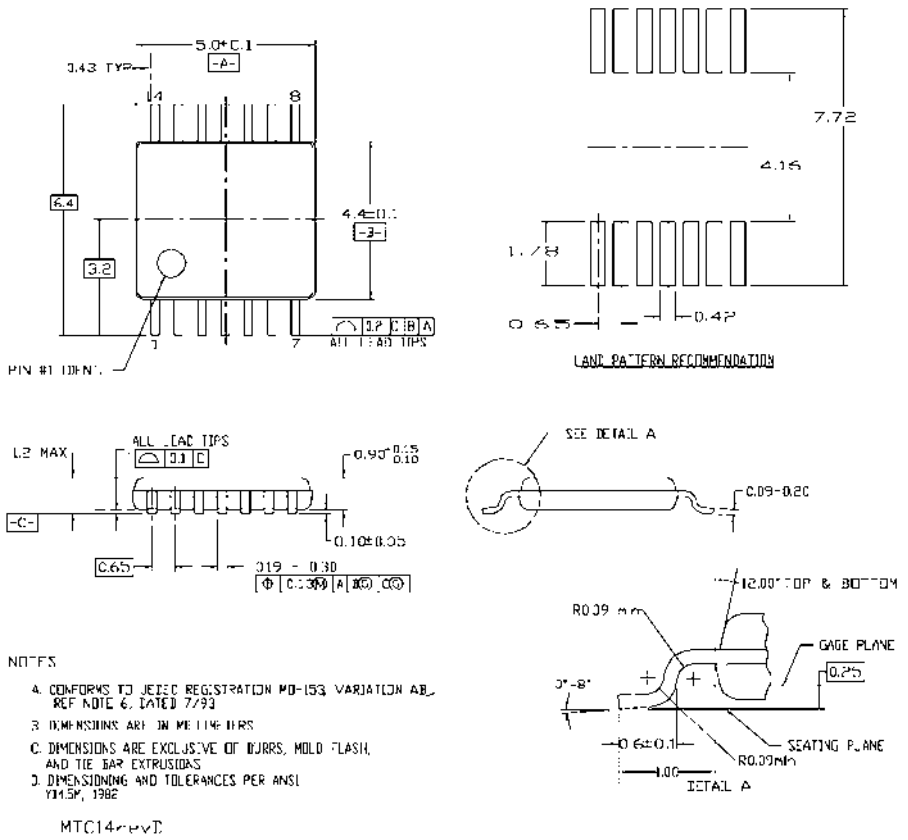

14-Lead Thin Shrink Small Outline Package (TSSOP), JEDEC MO-153, 4.4mm Wide
Package Number MTC14

Physical Dimensions inches (millimeters) unless otherwise noted (Continued)

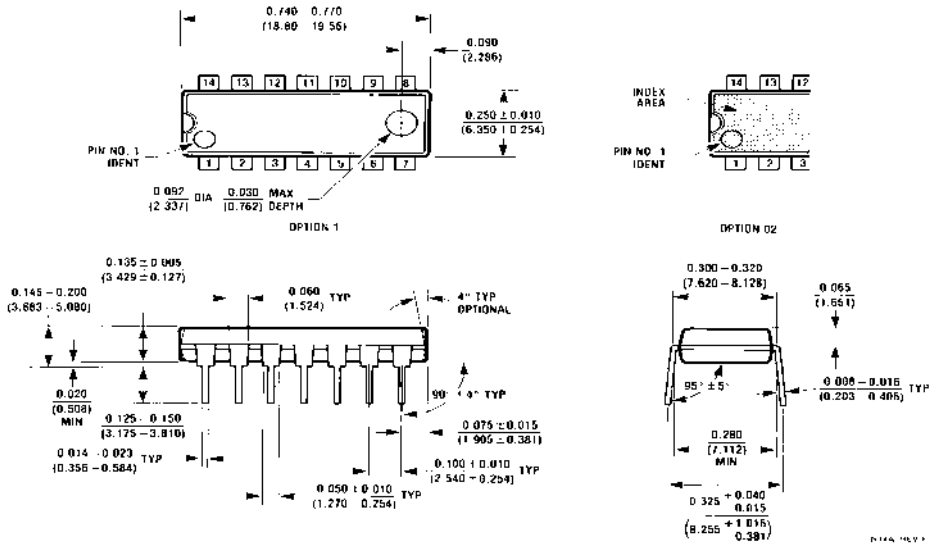

14-Lead Plastic Dual-In-Line Package (PDIP), JEDEC MS-001, 0.300" Wide
Package Number N14A