FAIRCHILD SEMICONDUCTOR™

April 1988
Revised September 2000

74F240 • 74F241 • 74F244
Octal Buffers/Line Drivers with 3-STATE Outputs

General Description

The 74F240, 74F241 and 74F244 are octal buffers and line drivers designed to be employed as memory and address drivers, clock drivers and bus-oriented transmitters/receivers which provide improved PC and board density.

Features

- 3-STATE outputs drive bus lines or buffer memory address registers
- Outputs sink 64 mA (48 mA mil)
- 12 mA source current
- Input clamp diodes limit high-speed termination effects

Ordering Code:

Order Code	Package Number	Package Description
74F240SC	M20B	20-Lead Small Outline Integrated Circuit (SOIC), JEDEC MS-013, 0.300 Wide
74F240SJ	M20D	20-Lead Small Outline Package (SOP), EIAJ TYPE II, 5.3mm Wide
74F240PC	N20A	20-Lead Plastic Dual-In-Line Package (PDIP), JEDEC MS-001, 0.300 Wide
74F241SC	M20B	20-Lead Small Outline Integrated Circuit (SOIC), JEDEC MS-013, 0.300 Wide
74F241SJ	M20D	20-Lead Small Outline Package (SOP), EIAJ TYPE II, 5.3mm Wide
74F241PC	N20A	20-Lead Plastic Dual-In-Line Package (PDIP), JEDEC MS-001, 0.300 Wide
74F244SC	M20B	20-Lead Small Outline Integrated Circuit (SOIC), JEDEC MS-013, 0.300 Wide
74F244SJ	M20D	20-Lead Small Outline Package (SOP), EIAJ TYPE II, 5.3mm Wide
74F244MSA	MSA20	20-Lead Shrink Small Outline Package (SSOP), EIAJ TYPE II, 5.3mm Wide
74F244PC	N20A	20-Lead Plastic Dual-In-Line Package (PDIP), JEDEC MS-001, 0.300 Wide

Devices also available in Tape and Reel. Specify by appending the suffix letter "X" to the ordering code.

Connection Diagrams

74F240

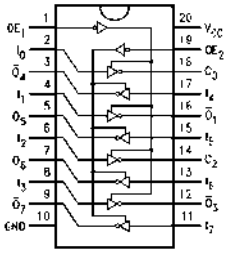

74F241

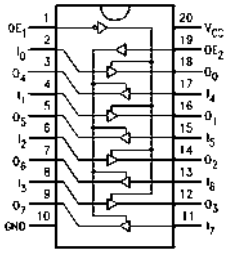

74F244

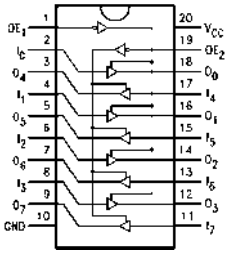

Logic Symbols

IEEE/IEC
74F240

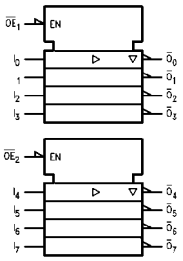

IEEE/IEC
74F241

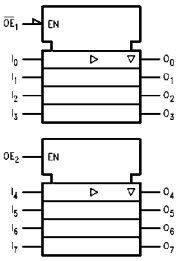

IEEE/IEC
74F244

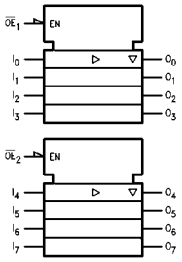

Unit Loading/Fan Out

Pin Names	Description	U.L. HIGH/LOW	Input I_{IH}/I_{IL} Output I_{OH}/I_{OL}
$\overline{OE}_1$, $\overline{OE}_2$	3-STATE Output Enable Input (Active LOW)	1.0/1.667	20 μA/–1 mA
OE_2	3-STATE Output Enable Input (Active HIGH)	1.0/1.667	20 μA/–1 mA
I_0–I_7	Inputs (74F240)	1.0/1.667 (Note 1)	20 μA/–1 mA
I_0–I_7	Inputs (74F241, 74F244)	1.0/2.667 (Note 1)	20 μA/–1.6 mA
$\overline{O}_0$–$\overline{O}_7$, O_0–O_7	Outputs	600/106.6 (80)	–12 mA/64 mA (48 mA)

Note 1: Worst-case 74F240 enabled; 74F241, 74F244 disabled

Truth Tables

74F240

$\overline{OE}_1$	D_{1n}	O_{1n}	$\overline{OE}_2$	D_{2n}	O_{2n}
H	X	Z	H	X	Z
L	H	L	L	H	L
L	L	H	L	L	H

74F241

$\overline{OE}_1$	D_{1n}	O_{1n}	OE_2	D_{2n}	O_{2n}
H	X	Z	L	X	Z
L	H	H	H	H	H
L	L	L	H	L	L

74F244

$\overline{OE}_1$	D_{1n}	O_{1n}	$\overline{OE}_2$	D_{2n}	O_{2n}
H	X	Z	H	X	Z
L	H	H	L	H	H
L	L	L	L	L	L

H = HIGH Voltage Level
L = LOW Voltage Level
X = Immaterial
Z = High Impedance

Absolute Maximum Ratings (Note 2)

Storage Temperature	–65°C to +150°C
Ambient Temperature under Bias	–55°C to +125°C
Junction Temperature under Bias	–55°C to +150°C
V_{CC} Pin Potential to Ground Pin	–0.5V to +7.0V
Input Voltage (Note 3)	–0.5V to +7.0V
Input Current (Note 3)	–30 mA to +5.0 mA
Voltage Applied to Output	
in HIGH State (with V_{CC} = 0V)	
Standard Output	–0.5V to V_{CC}
3-STATE Output	–0.5V to +5.5V
Current Applied to Output	
in LOW State (Max)	twice the rated I_{OL} (mA)
ESD Last Passing Voltage (Min)	4000V

Recommended Operating Conditions

Free Air Ambient Temperature	0°C to +70°C
Supply Voltage	+4.5V to +5.5V

Note 2: Absolute maximum ratings are values beyond which the device may be damaged or have its useful life impaired. Functional operation under these conditions is not implied.

Note 3: Either voltage limit or current limit is sufficient to protect inputs.

DC Electrical Characteristics

Symbol	Parameter		Min	Typ	Max	Units	V_{CC}	Conditions
V_{IH}	Input HIGH Voltage		2.0			V		Recognized as a HIGH Signal
V_{IL}	Input LOW Voltage				0.8	V		Recognized as a LOW Signal
V_{CD}	Input Clamp Diode Voltage				–1.2	V	Min	I_{IN} = –18 mA
V_{OH}	Output HIGH Voltage	10% V_{CC}	2.4			V	Min	I_{OH} = –3 mA
		10% V_{CC}	2.0					I_{OH} = –15 mA
		5% V_{CC}	2.7					I_{OH} = –3 mA
V_{OL}	Output LOW Voltage	10% V_{CC}			0.55	V	Min	I_{OL} = 64 mA
I_{IH}	Input HIGH Current				5.0	µA	Max	V_{IN} = 2.7V
I_{BVI}	Input HIGH Current Breakdown Test				7.0	µA	Max	V_{IN} = 7.0V
I_{CEX}	Output HIGH Leakage Current				50	µA	Max	V_{OUT} = V_{CC}
V_{ID}	Input Leakage Test		4.75			V	0.0	I_{ID} = 1.9 µA All Other Pins Grounded
I_{OD}	Output Leakage Circuit Current				3.75	µA	0.0	V_{IOD} = 150 mV All Other Pins Grounded
I_{IL}	Input LOW Current				–1.0 –1.6	mA	Max	V_{IN} = 0.5V ($\overline{OE}_1$, $\overline{OE}_2$, OE_2, D_n 74F240)) V_{IN} = 0.5V (D_n (74F241, 74F244))
I_{OZH}	Output Leakage Current				50	µA	Max	V_{OUT} = 2.7V
I_{OZL}	Output Leakage Current				–50	µA	Max	V_{OUT} = 0.5V
I_{OS}	Output Short-Circuit Current		–100		–225	mA	Max	V_{OUT} = 0V
I_{ZZ}	Bus Drainage Test				500	µA	0.0V	V_{OUT} = 5.25V
I_{CCH}	Power Supply Current (74F240)			19	29	mA	Max	V_O = HIGH
I_{CCL}	Power Supply Current (74F240)			50	75	mA	Max	V_O = LOW
I_{CCZ}	Power Supply Current (74F240)			42	63	mA	Max	V_O = HIGH Z
I_{CCH}	Power Supply Current (74F241, 74F244)			40	60	mA	Max	V_O = HIGH
I_{CCL}	Power Supply Current (74F241, 74F244)			60	90	mA	Max	V_O = LOW
I_{CCZ}	Power Supply Current (74F241, 74F244)			60	90	mA	Max	V_O = HIGH Z

AC Electrical Characteristics

Symbol	Parameter	$T_A = +25°C$ $V_{CC} = +5.0V$ $C_L = 50$ pF			$T_A = -55°C$ to $+125°C$ $V_{CC} = 5.0V$ $C_L = 50$ pF		$T_A = 0°C$ to $+70°C$ $V_{CC} = 5.0V$ $C_L = 50$ pF		Units
		Min	Typ	Max	Min	Max	Min	Max	
t_{PLH}	Propagation Delay	3.0	5.1	7.0	3.0	9.0	3.0	8.0	ns
t_{PHL}	Data to Output (74F240)	2.0	3.5	4.7	2.0	6.0	2.0	5.7	
t_{PZH}	Output Enable Time (74F240)	2.0	3.5	4.7	2.0	6.5	2.0	5.7	ns
t_{PZL}		4.0	6.9	9.0	4.0	10.5	4.0	10.0	
t_{PHZ}	Output Disable Time (74F240)	2.0	4.0	5.3	2.0	6.5	2.0	6.3	
t_{PLZ}		2.0	6.0	8.0	2.0	12.5	2.0	9.5	
t_{PLH}	Propagation Delay	2.5	4.0	5.2	2.0	6.5	2.5	6.2	ns
t_{PHL}	Data to Output (74F241, 74F244)	2.5	4.0	5.2	2.0	7.0	2.5	6.5	
t_{PZH}	Output Enable Time	2.0	4.3	5.7	2.0	7.0	2.0	6.7	ns
t_{PZL}	(74F241, 74F244)	2.0	5.4	7.0	2.0	8.5	2.0	8.0	
t_{PHZ}	Output Disable Time	2.0	4.5	6.0	2.0	7.0	2.0	7.0	
t_{PLZ}	(74F241, 74F244)	2.0	4.5	6.0	2.0	7.5	2.0	7.0	

Physical Dimensions inches (millimeters) unless otherwise noted

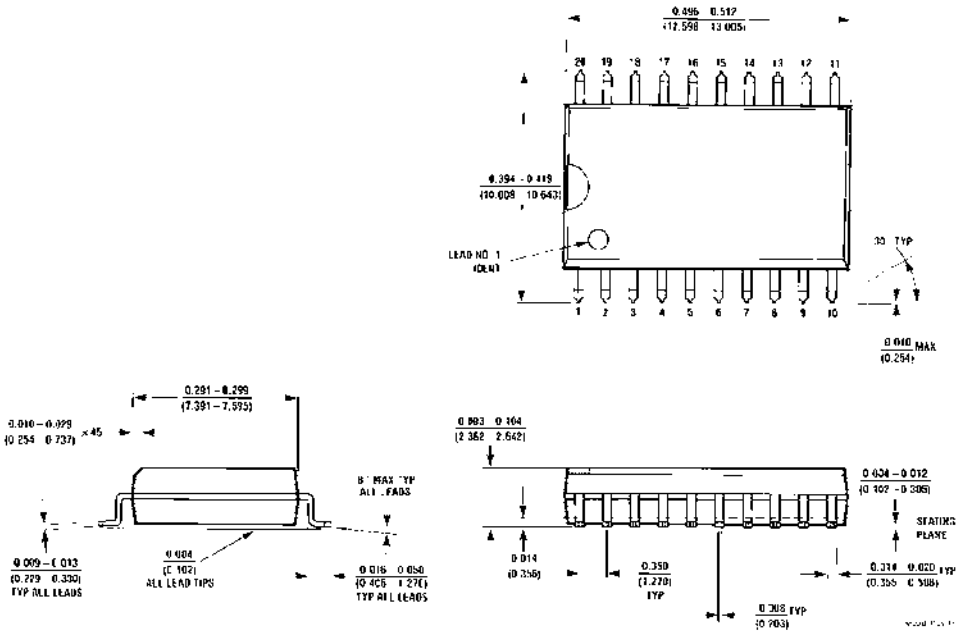

20-Lead Small Outline Integrated Circuit (SOIC), JEDEC MS-013, 0.300 Wide
Package Number M20B

Physical Dimensions inches (millimeters) unless otherwise noted (Continued)

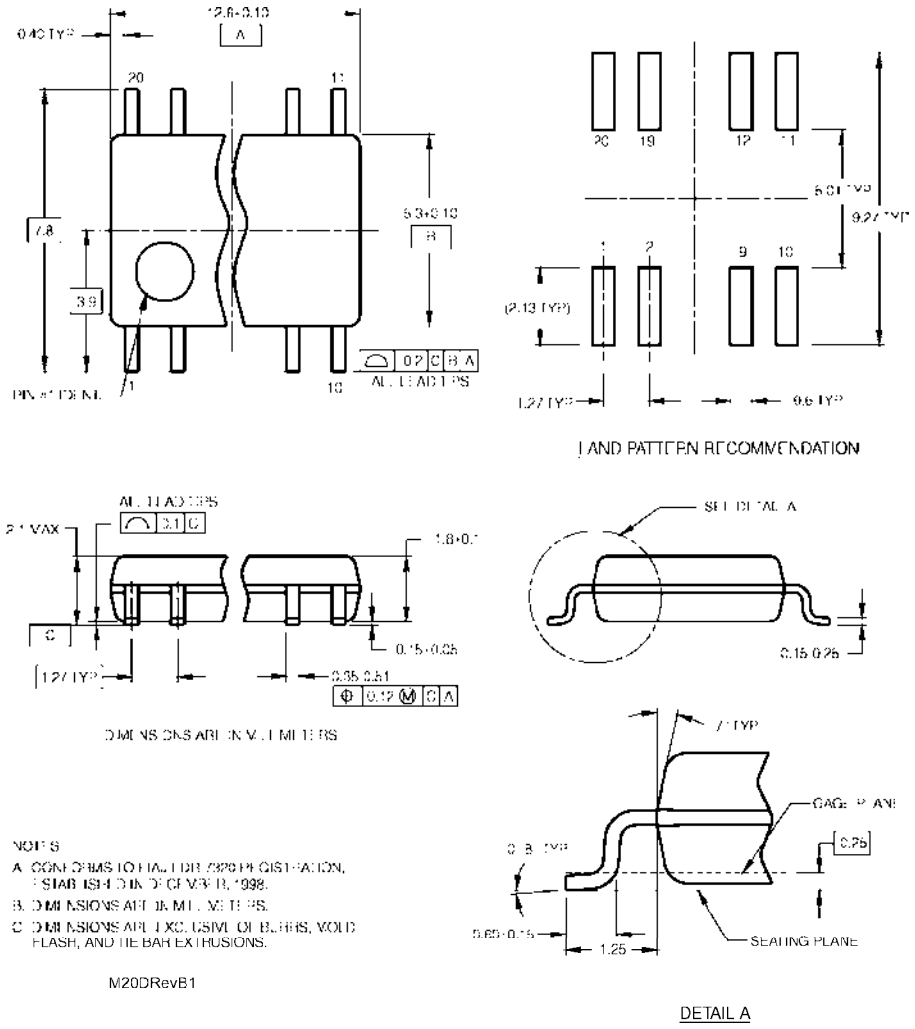

20-Lead Small Outline Package (SOP), EIAJ TYPE II, 5.3mm Wide
Package Number M20D

Physical Dimensions inches (millimeters) unless otherwise noted (Continued)

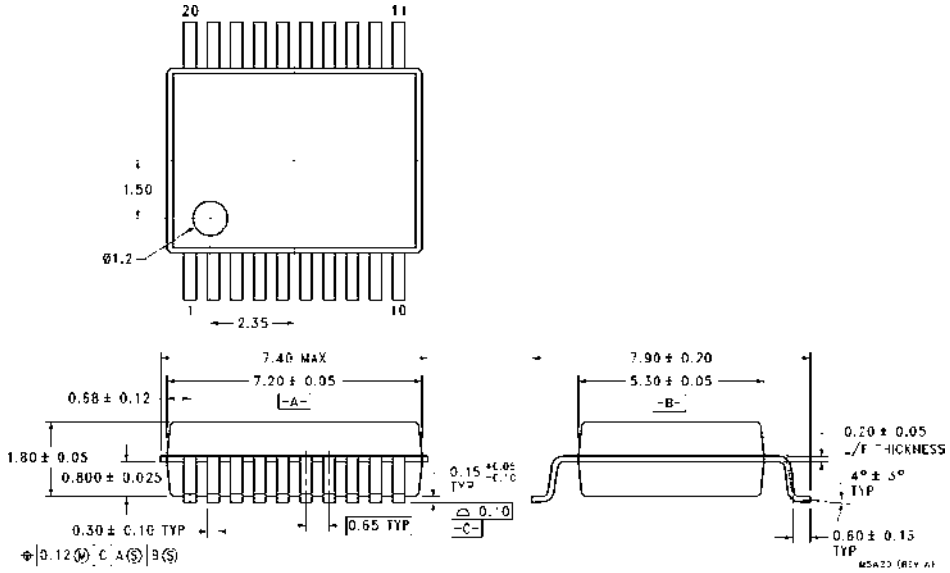

20-Lead Shrink Small Outline Package (SSOP), EIAJ TYPE II, 5.3mm Wide
Package Number MSA20

Physical Dimensions inches (millimeters) unless otherwise noted (Continued)

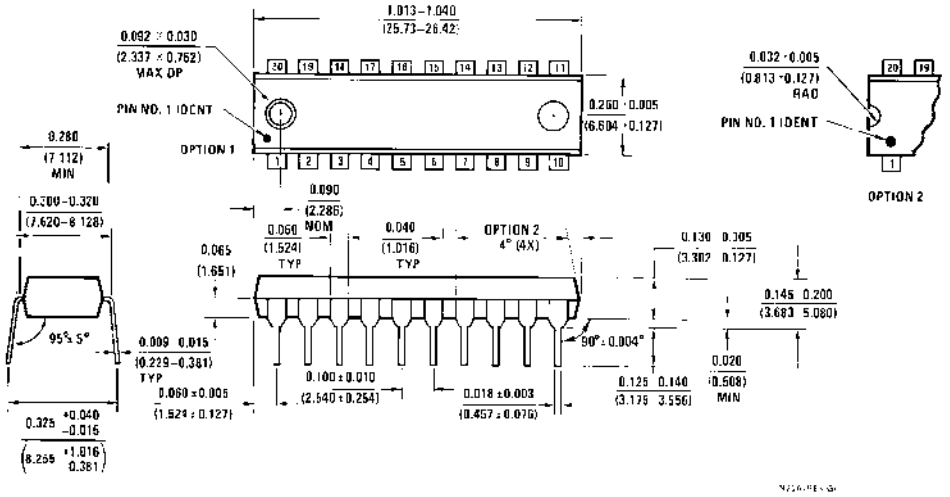

20-Lead Plastic Dual-In-Line Package (PDIP), JEDEC MS-001, 0.300 Wide
Package Number N20A