FAIRCHILD SEMICONDUCTOR™

November 1988
Revised November 1999

74AC245 • 74ACT245
Octal Bidirectional Transceiver with 3-STATE Inputs/Outputs

General Description

The AC/ACT245 contains eight non-inverting bidirectional buffers with 3-STATE outputs and is intended for bus-oriented applications. Current sinking capability is 24 mA at both the A and B ports. The Transmit/Receive (T/$\overline{R}$) input determines the direction of data flow through the bidirectional transceiver. Transmit (active-HIGH) enables data from A ports to B ports; Receive (active-LOW) enables data from B ports to A ports. The Output Enable input, when HIGH, disables both A and B ports by placing them in a HIGH Z condition.

Features

- I_{CC} and I_{OZ} reduced by 50%
- Noninverting buffers
- Bidirectional data path
- A and B outputs source/sink 24 mA
- ACT245 has TTL-compatible inputs

Ordering Code:

Order Number	Package Number	Package Description
74AC245SC	M20B	20-Lead Small Outline Integrated Circuit (SOIC), JEDEC MS-013, 0.300” Wide Body
74AC245SJ	M20D	20-Lead Small Outline Package (SOP), EIAJ TYPE II, 5.3mm Wide
74AC245MTC	MTC20	20-Lead Thin Shrink Small Outline Package (TSSOP), JEDEC MO-153, 4.4mm Wide
74AC245PC	N20A	20-Lead Plastic Dual-In-Line Package (PDIP), JEDEC MS-001, 0.300” Wide
74ACT245SC	M20B	20-Lead Small Outline Integrated Circuit (SOIC), JEDEC MS-013, 0.300” Wide Body
74ACT245SJ	M20D	20-Lead Small Outline Package (SOP), EIAJ TYPE II, 5.3mm Wide
74ACT245MSA	MSA20	20-Lead Shrink Small Outline Package (SSOP), EIAJ TYPE II, 5.3mm Wide
74ACT245MTC	MTC20	20-Lead Thin Shrink Small Outline Package (TSSOP), JEDEC MO-153, 4.4mm Wide
74ACT245PC	N20A	20-Lead Plastic Dual-In-Line Package (PDIP), JEDEC MS-001, 0.300” Wide

Device also available in Tape and Reel. Specify by appending suffix letter “X” to the ordering code.

Connection Diagram

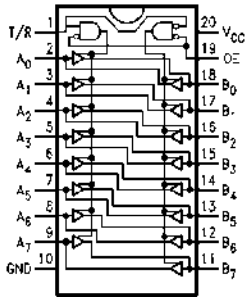

Logic Symbols

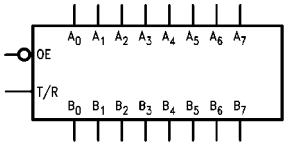

IEEE/IEC

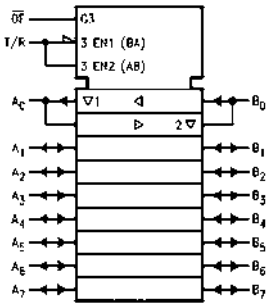

Pin Descriptions

Pin Names	Description
$\overline{OE}$	Output Enable Input
T/$\overline{R}$	Transmit/Receive Input
A_0–A_7	Side A 3-STATE Inputs or 3-STATE Outputs
B_0–B_7	Side B 3-STATE Inputs or 3-STATE Outputs

Truth Table

Inputs		Outputs
$\overline{OE}$	T/$\overline{R}$	
L	L	Bus B Data to Bus A
L	H	Bus A Data to Bus B
H	X	HIGH-Z State

H = HIGH Voltage Level
L = LOW Voltage Level
X = Immaterial

Absolute Maximum Ratings (Note 1)

Supply Voltage (V_{CC})	–0.5V to +7.0V
DC Input Diode Current (I_{IK})	
$V_I = -0.5V$	–20 mA
$V_I = V_{CC} + 0.5V$	+20 mA
DC Input Voltage (V_I)	–0.5V to $V_{CC} + 0.5V$
DC Output Diode Current (I_{OK})	
$V_O = -0.5V$	–20 mA
$V_O = V_{CC} + 0.5V$	+20 mA
DC Output Voltage (V_O)	–0.5V to $V_{CC} + 0.5V$
DC Output Source or Sink Current (I_O)	±50 mA
DC V_{CC} or Ground Current per Output Pin (I_{CC} or I_{GND})	±50 mA
Storage Temperature (T_{STG})	–65°C to +150°C
Junction Temperature (T_J)	
PDIP	140°C

Recommended Operating Conditions

Supply Voltage (V_{CC})	
AC	2.0V to 6.0V
ACT	4.5V to 5.5V
Input Voltage (V_I)	0V to V_{CC}
Output Voltage (V_O)	0V to V_{CC}
Operating Temperature (T_A)	–40°C to +85°C
Minimum Input Edge Rate ($\Delta V/\Delta t$)	
AC Devices	
V_{IN} from 30% to 70% of V_{CC}	
V_{CC} @ 3.3V, 4.5V, 5.5V	125 mV/ns
Minimum Input Edge Rate ($\Delta V/\Delta t$)	
ACT Devices	
V_{IN} from 0.8V to 2.0V	
V_{CC} @ 4.5V, 5.5V	125 mV/ns

Note 1: Absolute maximum ratings are those values beyond which damage to the device may occur. The databook specifications should be met, without exception, to ensure that the system design is reliable over its power supply, temperature, and output/input loading variables. Fairchild does not recommend operation of FACT™ circuits outside databook specifications.

DC Electrical Characteristics for AC

Symbol	Parameter	V_{CC} (V)	$T_A = +25°C$ Typ	$T_A = +25°C$ Guaranteed Limits	$T_A = -40°C$ to $+85°C$ Guaranteed Limits	Units	Conditions
V_{IH}	Minimum HIGH Level Input Voltage	3.0	1.5	2.1	2.1	V	$V_{OUT} = 0.1V$ or $V_{CC} - 0.1V$
		4.5	2.25	3.15	3.15		
		5.5	2.75	3.85	3.85		
V_{IL}	Maximum LOW Level Input Voltage	3.0	1.5	0.9	0.9	V	$V_{OUT} = 0.1V$ or $V_{CC} - 0.1V$
		4.5	2.25	1.35	1.35		
		5.5	2.75	1.65	1.65		
V_{OH}	Minimum HIGH Level Output Voltage	3.0	2.99	2.9	2.9	V	$I_{OUT} = -50\ \mu A$
		4.5	4.49	4.4	4.4		
		5.5	5.49	5.4	5.4		
							$V_{IN} = V_{IL}$ or V_{IH}
		3.0		2.56	2.46	V	$I_{OH} = -12$ mA
		4.5		3.86	3.76		$I_{OH} = -24$ mA
		5.5		4.86	4.76		$I_{OH} = -24$ mA (Note 2)
V_{OL}	Maximum LOW Level Output Voltage	3.0	0.002	0.1	0.1	V	$I_{OUT} = 50\ \mu A$
		4.5	0.001	0.1	0.1		
		5.5	0.001	0.1	0.1		
							$V_{IN} = V_{IL}$ or V_{IH}
		3.0		0.36	0.44	V	$I_{OL} = 12$ mA
		4.5		0.36	0.44		$I_{OL} = 24$ mA
		5.5		0.36	0.44		$I_{OL} = 24$ mA (Note 2)
I_{IN} (Note 4)	Maximum Input Leakage Current	5.5		±0.1	±1.0	μA	$V_I = V_{CC}$, GND
I_{OLD}	Dynamic Output Current Minimum (Note 3)	5.5			75	mA	$V_{OLD} = 1.65V$ Max
I_{OHD}		5.5			–75	mA	$V_{OHD} = 3.85V$ Min
I_{CC} (Note 4)	Maximum Quiescent Supply Current	5.5		4.0	40.0	μA	$V_{IN} = V_{CC}$ or GND
I_{OZT}	Maximum I/O Leakage Current	5.5		±0.3	±3.0	μA	V_I (OE) $= V_{IL}$, V_{IH}; $V_I = V_{CC}$, GND; $V_O = V_{CC}$, GND

Note 2: All outputs loaded; thresholds on input associated with output under test.

Note 3: Maximum test duration 2.0 ms, one output loaded at a time.

Note 4: I_{IN} and I_{CC} @ 3.0V are guaranteed to be less than or equal to the respective limit @ 5.5V V_{CC}.

DC Characteristics for ACT

Symbol	Parameter	V_{CC} (V)	$T_A = +25°C$ Typ	$T_A = -40°C$ to $+85°C$ Guaranteed Limits		Units	Conditions
V_{IH}	Minimum HIGH Level Input Voltage	4.5	1.5	2.0	2.0	V	$V_{OUT} = 0.1V$ or $V_{CC} - 0.1V$
		5.5	1.5	2.0	2.0		
V_{IL}	Maximum LOW Level Input Voltage	4.5	1.5	0.8	0.8	V	$V_{OUT} = 0.1V$ or $V_{CC} - 0.1V$
		5.5	1.5	0.8	0.8		
V_{OH}	Minimum HIGH Level Output Voltage	4.5	4.49	4.4	4.4	V	$I_{OUT} = -50\ \mu A$
		5.5	5.49	5.4	5.4		
		4.5		3.86	3.76	V	$V_{IN} = V_{IL}$ or V_{IH} $I_{OH} = -24$ mA
		5.5		4.86	4.76		$I_{OH} = -24$ mA (Note 5)
V_{OL}	Maximum LOW Level Output Voltage	4.5	0.001	0.1	0.1	V	$I_{OUT} = 50\ \mu A$
		5.5	0.001	0.1	0.1		
		4.5		0.36	0.44	V	$V_{IN} = V_{IL}$ or V_{IH} $I_{OL} = 24$ mA
		5.5		0.36	0.44		$I_{OL} = 24$ mA (Note 5)
I_{IN}	Maximum Input Leakage Current	5.5		±0.1	±1.0	μA	$V_I = V_{CC}$, GND
I_{CCT}	Maximum I_{CC}/Input	5.5	0.6		1.5	mA	$V_I = V_{CC} - 2.1V$
I_{OLD}	Dynamic Output	5.5			75	mA	$V_{OLD} = 1.65V$ Max
I_{OHD}	Current Minimum (Note 6)	5.5			–75	mA	$V_{OHD} = 3.85V$ Min
I_{CC}	Maximum Quiescent Supply Current	5.5		4.0	40.0	μA	$V_{IN} = V_{CC}$ or GND
I_{OZT}	Maximum I/O Leakage Current	5.5		±0.3	±3.0	μA	V_I (OE) $= V_{IL}$, V_{IH} $V_I = V_{CC}$, GND $V_O = V_{CC}$, GND

Note 5: All outputs loaded; thresholds on input associated with output under test.

Note 6: Maximum test duration 2.0 ms, one output loaded at a time.

AC Electrical Characteristics for AC

Symbol	Parameter	V_{CC} (V) (Note 7)	$T_A = +25°C$, $C_L = 50$ pF Min	Typ	Max	$T_A = -40°C$ to $+85°C$, $C_L = 50$ pF Min	Max	Units
t_{PLH}	Propagation Delay A_n to B_n or B_n to A_n	3.3	1.5	5.0	8.5	1.0	9.0	ns
		5.0	1.5	3.5	6.5	1.0	7.0	
t_{PHL}	Propagation Delay A_n to B_n or B_n to A_n	3.3	1.5	5.0	8.5	1.0	9.0	ns
		5.0	1.5	3.5	6.0	1.0	7.0	
t_{PZH}	Output Enable Time	3.3	2.5	7.0	11.5	2.0	12.5	ns
		5.0	1.5	5.0	8.5	1.0	9.0	
t_{PZL}	Output Enable Time	3.3	2.5	7.5	12.0	2.0	13.5	ns
		5.0	1.5	5.5	9.0	1.0	9.5	
t_{PHZ}	Output Disable Time	3.3	2.0	6.5	12.0	1.0	12.5	ns
		5.0	1.5	5.5	9.0	1.0	10.0	
t_{PLZ}	Output Disable Time	3.3	2.0	7.0	11.5	1.5	13.0	ns
		5.0	1.5	5.5	9.0	1.0	10.0	

Note 7: Voltage Range 3.3 is 3.3V ±0.3V
Voltage Range 5.0 is 5.0V ±0.5V

AC Electrical Characteristics for ACT

Symbol	Parameter	V_{CC} (V) (Note 8)	$T_A = +25°C$ $C_L = 50$ pF			$T_A = -40°C$ to $+85°C$ $C_L = 50$ pF		Units
			Min	Typ	Max	Min	Max	
t_{PLH}	Propagation Delay A_n to B_n or B_n to A_n	5.0	1.5	4.0	7.5	1.5	8.0	ns
t_{PHL}	Propagation Delay A_n to B_n or B_n to A_n	5.0	1.5	4.0	8.0	1.0	9.0	ns
t_{PZH}	Output Enable Time	5.0	1.5	5.0	10.0	1.5	11.0	ns
t_{PZL}	Output Enable Time	5.0	1.5	5.5	10.0	1.5	12.0	ns
t_{PHZ}	Output Disable Time	5.0	1.5	5.5	10.0	1.0	11.0	ns
t_{PLZ}	Output Disable Time	5.0	2.0	5.0	10.0	1.5	11.0	ns

Note 8: Voltage Range 5.0 is 5.0V ± 0.5V

Capacitance

Symbol	Parameter	Typ	Units	Conditions
C_{IN}	Input Capacitance	4.5	pF	V_{CC} = OPEN
$C_{I/O}$	Input/Output Capacitance	15.0	pF	$V_{CC} = 5.0V$
C_{PD}	Power Dissipation Capacitance	45.0	pF	$V_{CC} = 5.0V$

Physical Dimensions inches (millimeters) unless otherwise noted

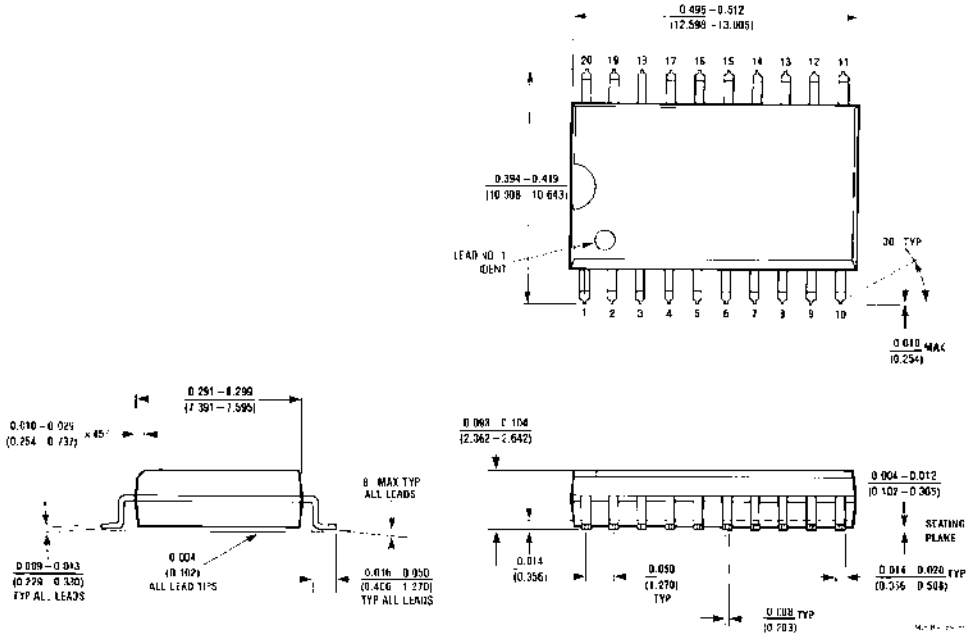

20-Lead Small Outline Integrated Circuit (SOIC), JEDEC MS-013, 0.300" Wide Body
Package Number M20B

Physical Dimensions inches (millimeters) unless otherwise noted (Continued)

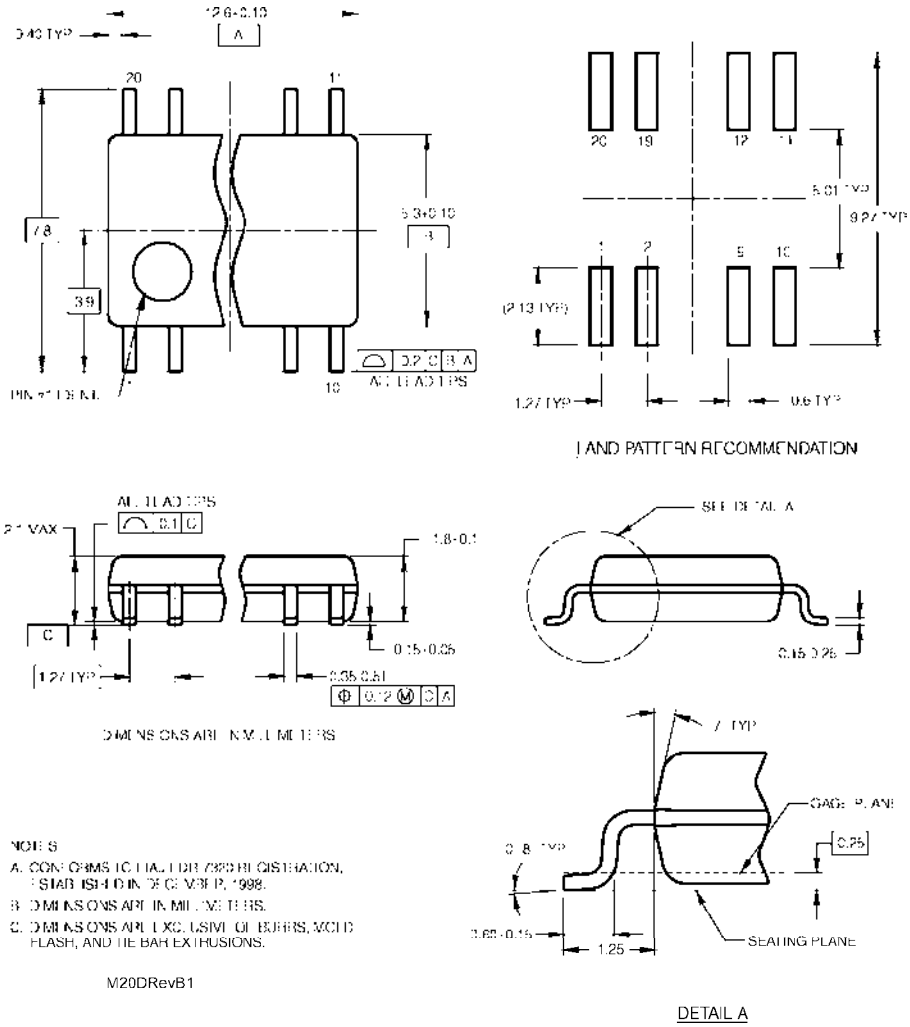

20-Lead Small Outline Package (SOP), EIAJ TYPE II, 5.3mm Wide
Package Number M20D

Physical Dimensions inches (millimeters) unless otherwise noted (Continued)

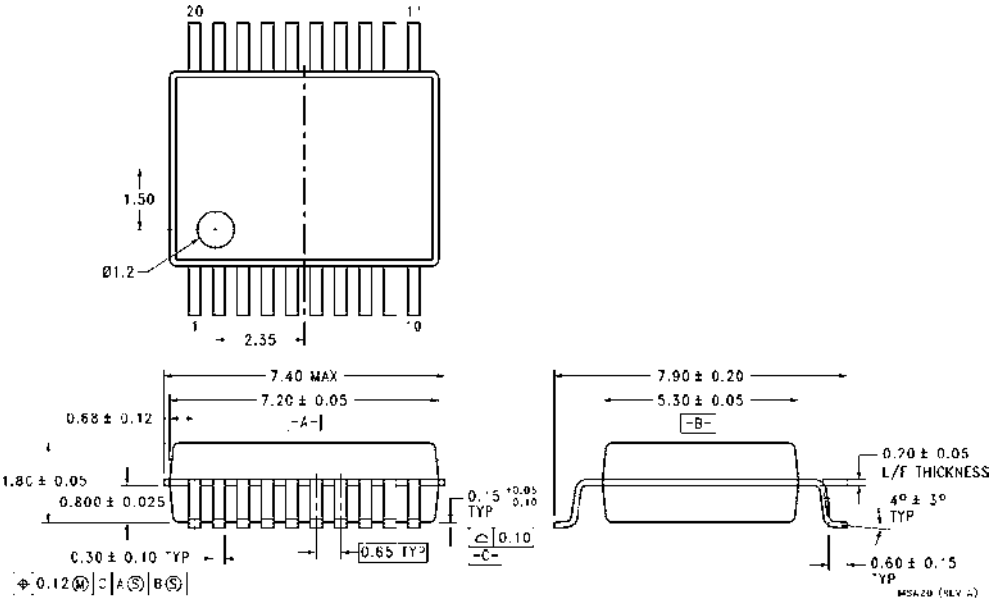

20-Lead Shrink Small Outline Package (SSOP), EIAJ TYPE II, 5.3mm Wide
Package Number MSA20

Physical Dimensions inches (millimeters) unless otherwise noted (Continued)

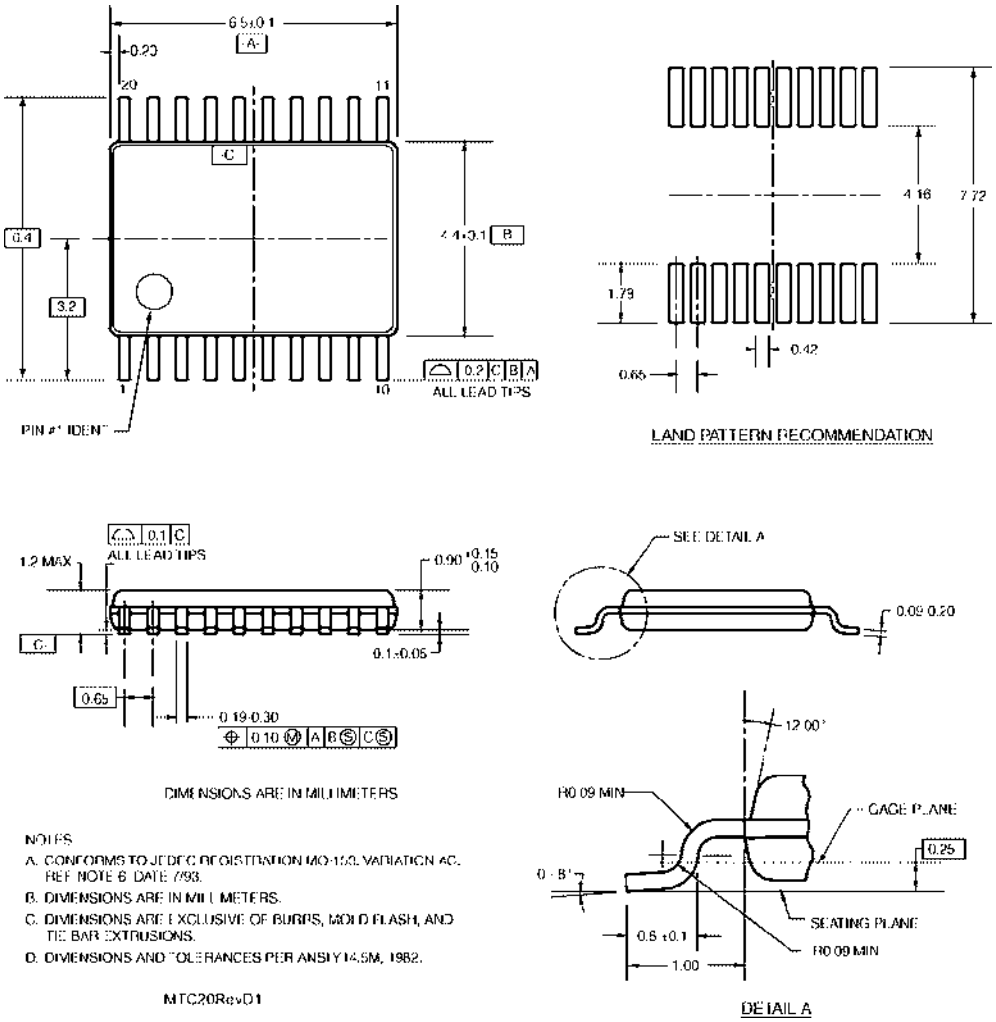

20-Lead Thin Shrink Small Outline Package, (TSSOP) JEDEC
Package Number MTC20

Physical Dimensions inches (millimeters) unless otherwise noted (Continued)

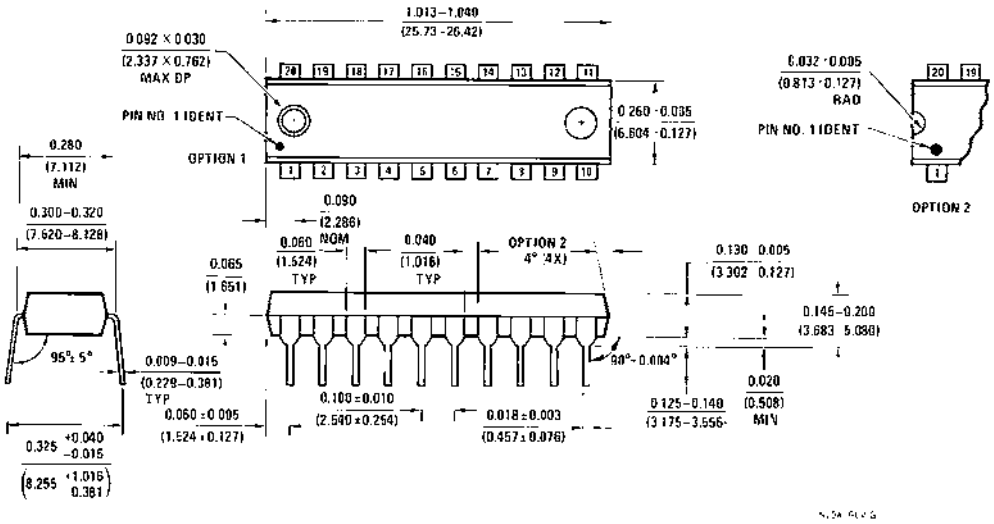

20-Lead Plastic Dual-In-Line (PDIP), JEDEC MS-001, 0.300" Wide
Package Number N20A