National Semiconductor

February 1993

54AC/74AC244 • 54ACT/74ACT244 Octal Buffer/Line Driver with TRI-STATE® Outputs

General Description

The 'AC/'ACT244 is an octal buffer and line driver designed to be employed as a memory address driver, clock driver and bus-oriented transmitter/receiver which provides improved PC board density.

Features

- I_{CC} and I_{OZ} reduced by 50%
- TRI-STATE outputs drive bus lines or buffer memory address registers
- Outputs source/sink 24 mA
- 'ACT244 has TTL-compatible inputs
- Standard Military Drawing (SMD)
  — 'AC244: 5962-87552
  — 'ACT244: 5962-87760

Logic Symbol

IEEE/IEC

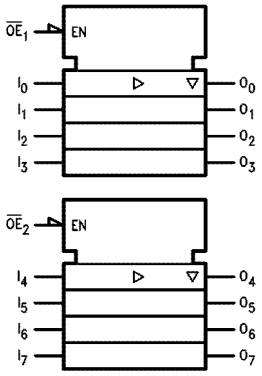

TL/F/9943–1

Connection Diagrams

Pin Assignment for DIP, Flatpak, SSOP and SOIC

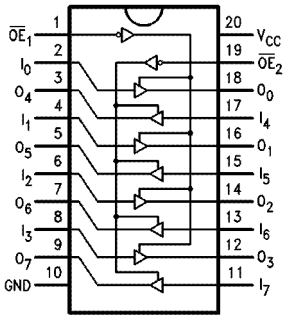

TL/F/9943–2

Pin Assignment for LCC and PCC

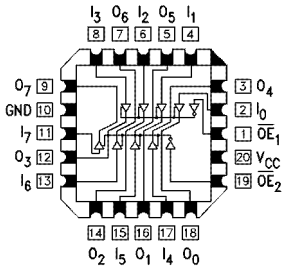

TL/F/9943–3

Pin Names	Description
$\overline{OE}_1$, $\overline{OE}_2$	TRI-STATE Output Enable Inputs
I_0–I_7	Inputs
O_0–O_7	Outputs

Truth Tables

Inputs		Outputs (Pins 12, 14, 16, 18)
$\overline{OE}_1$	I_n	
L	L	L
L	H	H
H	X	Z

Inputs		Outputs (Pins 3, 5, 7, 9)
$\overline{OE}_2$	I_n	
L	L	L
L	H	H
H	X	Z

H = HIGH Voltage Level
L = LOW Voltage Level
X = Immaterial
Z = High Impedance

RRD-B30M75/Printed in U. S. A.

Absolute Maximum Ratings (Note 1)

If Military/Aerospace specified devices are required, please contact the National Semiconductor Sales Office/Distributors for availability and specifications.

Supply Voltage (V_{CC})	−0.5V to +7.0V
DC Input Diode Current (I_{IK})	
$V_I = -0.5V$	−20 mA
$V_I = V_{CC} + 0.5V$	+20 mA
DC Input Voltage (V_I)	−0.5V to V_{CC} + 0.5V
DC Output Diode Current (I_{OK})	
$V_O = -0.5V$	−20 mA
$V_O = V_{CC} + 0.5V$	+20 mA
DC Output Voltage (V_O)	−0.5V to V_{CC} + 0.5V
DC Output Source or Sink Current (I_O)	±50 mA
DC V_{CC} or Ground Current per Output Pin (I_{CC} or I_{GND})	±50 mA
Storage Temperature (T_{STG})	−65°C to +150°C
Junction Temperature (T_J)	
CDIP	175°C
PDIP	140°C

Note 1: Absolute maximum ratings are those values beyond which damage to the device may occur. The databook specifications should be met, without exception, to ensure that the system design is reliable over its power supply, temperature, and output/input loading variables. National does not recommend operation of FACT™ circuits outside databook specifications.

Recommended Operating Conditions

Supply Voltage (V_{CC})	
'AC	2.0V to 6.0V
'ACT	4.5V to 5.5V
Input Voltage (V_I)	0V to V_{CC}
Output Voltage (V_O)	0V to V_{CC}
Operating Temperature (T_A)	
74AC/ACT	−40°C to +85°C
54AC/ACT	−55°C to +125°C
Minimum Input Edge Rate (ΔV/Δt) 'AC Devices V_{IN} from 30% to 70% of V_{CC} V_{CC} @ 3.3V, 4.5V, 5.5V	125 mV/ns
Minimum Input Edge Rate (ΔV/Δt) 'ACT Devices V_{IN} from 0.8V to 2.0V V_{CC} @ 4.5V, 5.5V	125 mV/ns

DC Characteristics for 'AC Family Devices

Symbol	Parameter	V_{CC} (V)	74AC $T_A = +25°C$ Typ	74AC $T_A = +25°C$ Guaranteed Limits	54AC $T_A = -55°C$ to $+125°C$ Guaranteed Limits	74AC $T_A = -40°C$ to $+85°C$ Guaranteed Limits	Units	Conditions
V_{IH}	Minimum High Level Input Voltage	3.0	1.5	2.1	2.1	2.1	V	$V_{OUT} = 0.1V$ or $V_{CC} - 0.1V$
		4.5	2.25	3.15	3.15	3.15		
		5.5	2.75	3.85	3.85	3.85		
V_{IL}	Maximum Low Level Input Voltage	3.0	1.5	0.9	0.9	0.9	V	$V_{OUT} = 0.1V$ or $V_{CC} - 0.1V$
		4.5	2.25	1.35	1.35	1.35		
		5.5	2.75	1.65	1.65	1.65		
V_{OH}	Minimum High Level Output Voltage	3.0	2.99	2.9	2.9	2.9	V	$I_{OUT} = -50\ \mu A$
		4.5	4.49	4.4	4.4	4.4		
		5.5	5.49	5.4	5.4	5.4		
		3.0		2.56	2.4	2.46	V	*$V_{IN} = V_{IL}$ or V_{IH} I_{OH} −12 mA
		4.5		3.86	3.7	3.76		−24 mA
		5.5		4.86	4.7	4.76		−24 mA
V_{OL}	Maximum Low Level Output Voltage	3.0	0.002	0.1	0.1	0.1	V	$I_{OUT} = 50\ \mu A$
		4.5	0.001	0.1	0.1	0.1		
		5.5	0.001	0.1	0.1	0.1		
		3.0		0.36	0.50	0.44	V	*$V_{IN} = V_{IL}$ or V_{IH} I_{OL} 12 mA
		4.5		0.36	0.50	0.44		24 mA
		5.5		0.36	0.50	0.44		24 mA
I_{IN}	Maximum Input Leakage Current	5.5		±0.1	±1.0	±1.0	μA	$V_I = V_{CC}$, GND

*All outputs loaded; thresholds on input associated with output under test.

DC Characteristics for ’AC Family Devices (Continued)

Symbol	Parameter	V_{CC} (V)	74AC $T_A = +25°C$ Typ	74AC Guaranteed Limits	54AC $T_A = -55°C$ to $+125°C$ Guaranteed Limits	74AC $T_A = -40°C$ to $+85°C$ Guaranteed Limits	Units	Conditions
I_{OZ}	Maximum TRI-STATE® Current	5.5		±0.25	±5.0	±2.5	μA	V_I (OE) = V_{IL}, V_{IH} $V_I = V_{CC}$, V_{GND} $V_O = V_{CC}$, GND
I_{OLD}	†Minimum Dynamic Output Current	5.5			50	75	mA	V_{OLD} = 1.65V Max
I_{OHD}		5.5			−50	−75	mA	V_{OHD} = 3.85V Min
I_{CC}	Maximum Quiescent Supply Current	5.5		4.0	80.0	40.0	μA	$V_{IN} = V_{CC}$ or GND

†Maximum test duration 2.0 ms, one output loaded at a time.

Note: I_{IN} and I_{CC} @ 3.0V are guaranteed to be less than or equal to the respective limit @ 5.5V V_{CC}.
I_{CC} for 54AC @ 25°C is identical to 74AC @ 25°C.

DC Characteristics for ’ACT Family Devices

Symbol	Parameter	V_{CC} (V)	74ACT $T_A = +25°C$ Typ	74ACT Guaranteed Limits	54ACT $T_A = -55°C$ to $+125°C$ Guaranteed Limits	74ACT $T_A = -40°C$ to $+85°C$ Guaranteed Limits	Units	Conditions
V_{IH}	Minimum High Level Input Voltage	4.5 5.5	1.5 1.5	2.0 2.0	2.0 2.0	2.0 2.0	V	V_{OUT} = 0.1V or V_{CC} − 0.1V
V_{IL}	Maximum Low Level Input Voltage	4.5 5.5	1.5 1.5	0.8 0.8	0.8 0.8	0.8 0.8	V	V_{OUT} = 0.1V or V_{CC} − 0.1V
V_{OH}	Minimum High Level Output Voltage	4.5 5.5	4.49 5.49	4.4 5.4	4.4 5.4	4.4 5.4	V	I_{OUT} = −50 μA
		4.5 5.5		3.86 4.86	3.70 4.70	3.76 4.76	V	*V_{IN} = V_{IL} or V_{IH} I_{OH} −24 mA −24 mA
V_{OL}	Maximum Low Level Output Voltage	4.5 5.5	0.001 0.001	0.1 0.1	0.1 0.1	0.1 0.1	V	I_{OUT} = 50 μA
		4.5 5.5		0.36 0.36	0.50 0.50	0.44 0.44	V	*V_{IN} = V_{IL} or V_{IH} I_{OL} 24 mA 24 mA
I_{IN}	Maximum Input Leakage Current	5.5		±0.1	±1.0	±1.0	μA	$V_I = V_{CC}$, GND
I_{OZ}	Maximum TRI-STATE® Current	5.5		±0.25	±5.0	±2.5	μA	$V_I = V_{IL}$, V_{IH} $V_O = V_{CC}$, GND
I_{CCT}	Maximum I_{CC}/Input	5.5	0.6		1.6	1.5	mA	$V_I = V_{CC}$ − 2.1V
I_{OLD}	†Minimum Dynamic Output Current	5.5			50	75	mA	V_{OLD} = 1.65V Max
I_{OHD}		5.5			−50	−75	mA	V_{OHD} = 3.85V Min
I_{CC}	Maximum Quiescent Supply Current	5.5		4.0	80.0	40.0	μA	$V_{IN} = V_{CC}$ or GND

*All outputs loaded; thresholds on input associated with output under test.

†Maximum test duration 2.0 ms, one output loaded at a time.

Note: I_{CC} for 54ACT @ 25°C is identical to 74ACT @ 25°C.

AC Electrical Characteristics

Symbol	Parameter	V_{CC}* (V)	74AC $T_A = +25°C$ $C_L = 50$ pF			54AC $T_A = -55°C$ to $+125°C$ $C_L = 50$ pF		74AC $T_A = -40°C$ to $+85°C$ $C_L = 50$ pF		Units
			Min	Typ	Max	Min	Max	Min	Max	
t_{PLH}	Propagation Delay Data to Output	3.3 5.0	2.0 1.5	6.5 5.0	9.0 7.0	1.0 1.0	12.5 9.5	1.5 1.0	10.0 7.5	ns
t_{PHL}	Propagation Delay Data to Output	3.3 5.0	2.0 1.5	6.5 5.0	9.0 7.0	1.0 1.0	12.0 9.0	2.0 1.0	10.0 7.5	ns
t_{PZH}	Output Enable Time	3.3 5.0	2.0 1.5	6.0 5.0	10.5 7.0	1.0 1.0	11.5 9.0	1.5 1.5	11.0 8.0	ns
t_{PZL}	Output Enable Time	3.3 5.0	2.5 1.5	7.5 5.5	10.0 8.0	1.0 1.0	13.0 10.5	2.0 1.5	11.0 8.5	ns
t_{PHZ}	Output Disable Time	3.3 5.0	3.0 2.5	7.0 6.5	10.0 9.0	1.0 1.0	12.5 10.5	1.5 1.0	10.5 9.5	ns
t_{PLZ}	Output Disable Time	3.3 5.0	2.5 2.0	7.5 6.5	10.5 9.0	1.0 1.0	13.0 11.0	2.5 2.0	11.5 9.5	ns

*Voltage Range 3.3 is 3.3V ±0.3V
Voltage Range 5.0 is 5.0V ±0.5V

AC Electrical Characteristics

Symbol	Parameter	V_{CC}* (V)	74ACT $T_A = +25°C$ $C_L = 50$ pF			54ACT $T_A = -55°C$ to $+125°C$ $C_L = 50$ pF		74ACT $T_A = -40°C$ to $+85°C$ $C_L = 50$ pF		Units
			Min	Typ	Max	Min	Max	Min	Max	
t_{PLH}	Propagation Delay Data to Output	5.0	2.0	6.5	9.0	1.0	10.0	1.5	10.0	ns
t_{PHL}	Propagation Delay Data to Output	5.0	2.0	7.0	9.0	1.0	10.0	1.5	10.0	ns
t_{PZH}	Output Enable Time	5.0	1.5	6.0	8.5	1.0	9.5	1.0	9.5	ns
t_{PZL}	Output Enable Time	5.0	2.0	7.0	9.5	1.0	11.0	1.5	10.5	ns
t_{PHZ}	Output Disable Time	5.0	2.0	7.0	9.5	1.0	11.0	1.5	10.5	ns
t_{PLZ}	Output Disable Time	5.0	2.5	7.5	10.0	1.0	11.5	2.0	10.5	ns

*Voltage Range 5.0 is 5.0V ±0.5V

Capacitance

Symbol	Parameter	Typ	Units	Conditions
C_{IN}	Input Capacitance	4.5	pF	V_{CC} = OPEN
C_{PD}	Power Dissipation Capacitance	45.0	pF	V_{CC} = 5.0V

Ordering Information

The device number is used to form part of a simplified purchasing code where the package type and temperature range are defined as follows:

74ACT 244 P C QR

Temperature Range Family
- 74AC = Commercial
- 54AC = Military
- 74ACT = Commercial TTL-Compatible
- 54ACT = Military TTL-Compatible

Device Type

Package Code
- P = Plastic DIP
- D = Ceramic DIP
- F = Flatpak
- L = Leadless Ceramic Chip Carrier (LCC)
- Q = Plastic Leadless Chip Carrier (PCC)
- S = Small Outline (SOIC)
- MSA = Shrink Small Outline (EIAJ SSOP)

Temperature Range
- C = Commercial (−40°C to +85°C)
- M = Military (−55°C to +125°C)

Special Variations
- X = Devices shipped in 13″ reels
- QR = Commercial grade device with burn-in
- QB = Military grade device with environmental and burn-in processing shipped in tubes

NOTE: NOT REQUIRED FOR MSA PACKAGE CODE

Physical Dimensions inches (millimeters)

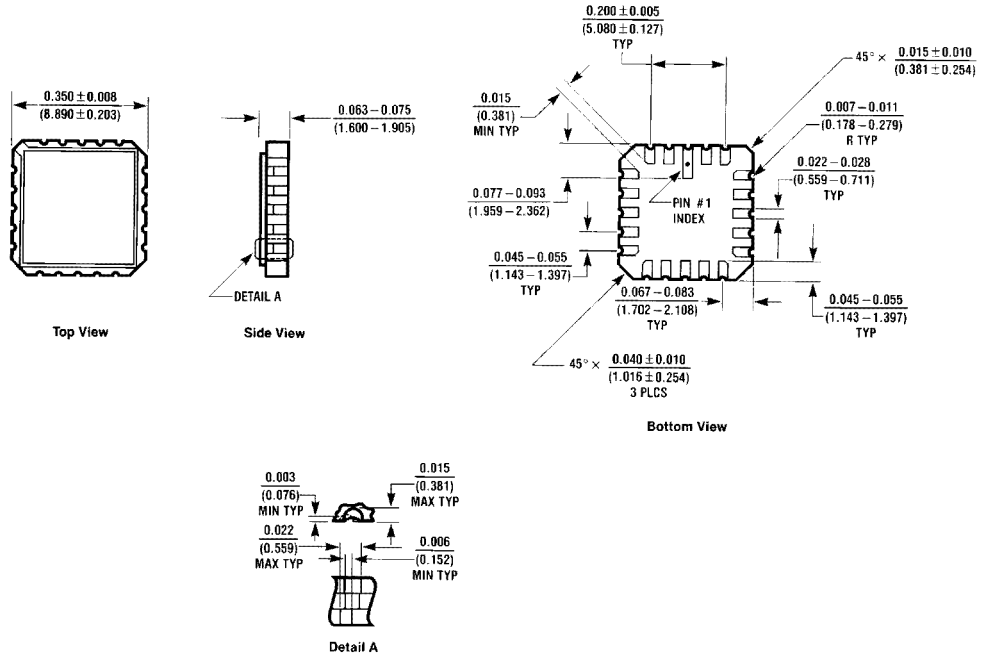

20 Terminal Ceramic Leadless Chip Carrier (L)
NS Package Number E20A

Physical Dimensions inches (millimeters) (Continued)

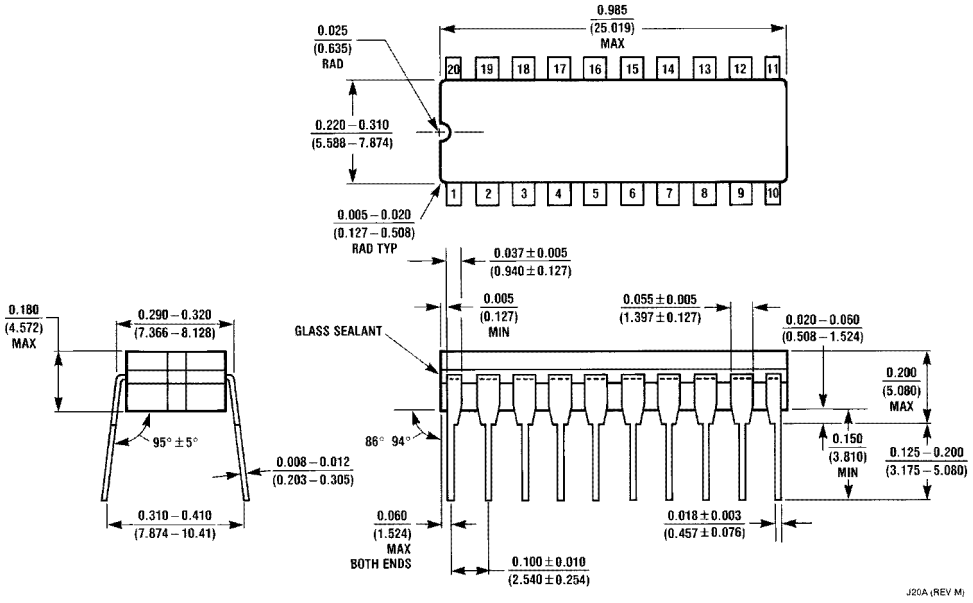

20 Lead Ceramic Dual-In-Line Package (D)
NS Package Number J20A

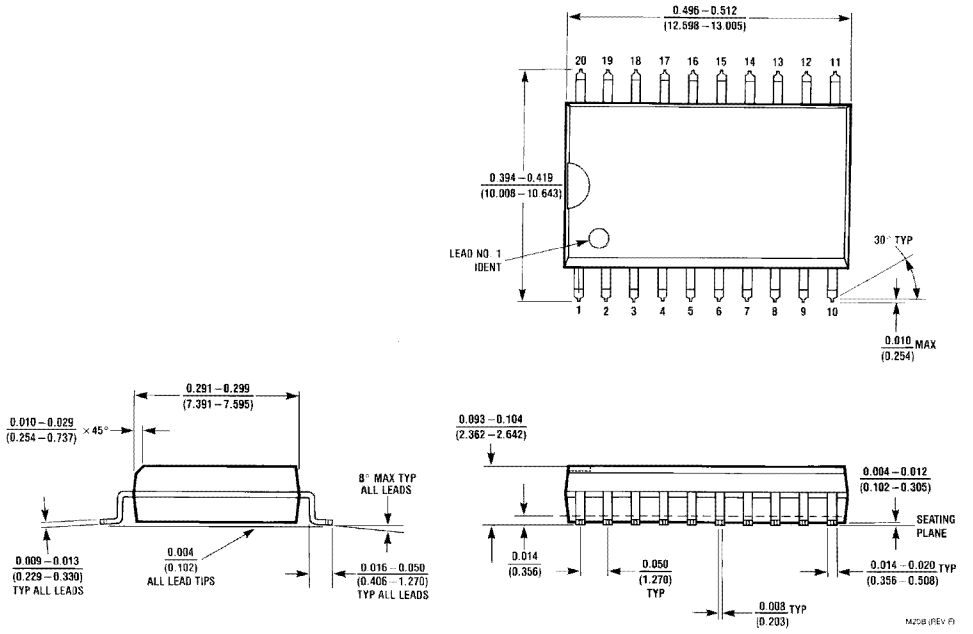

20 Lead Small Outline Integrated Circuit (S)
NS Package Number M20B

Physical Dimensions inches (millimeters) (Continued)

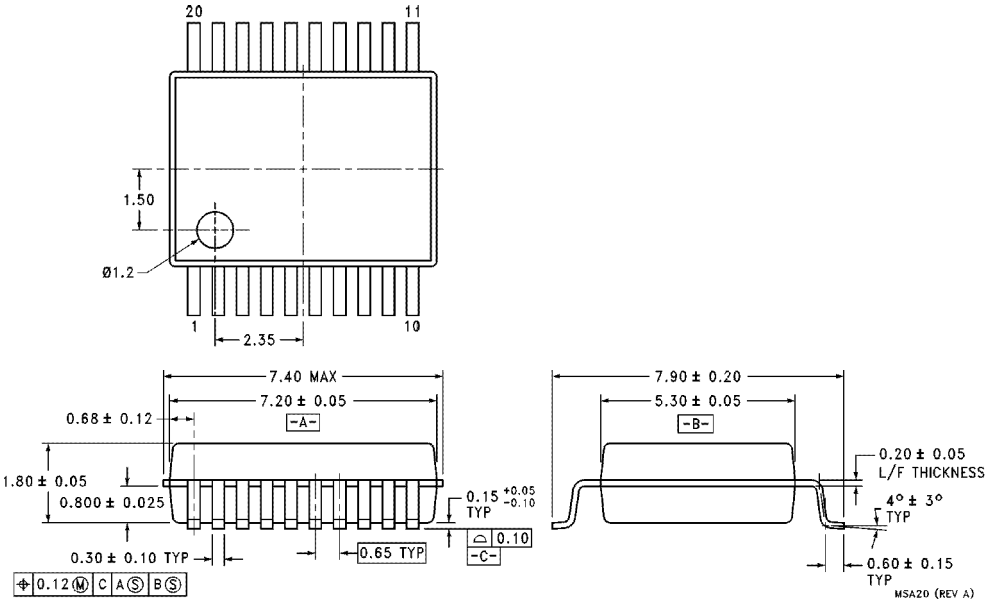

20 Lead Plastic EIAJ SSOP (MSA)
NS Package Number MSA20

Physical Dimensions inches (millimeters) (Continued)

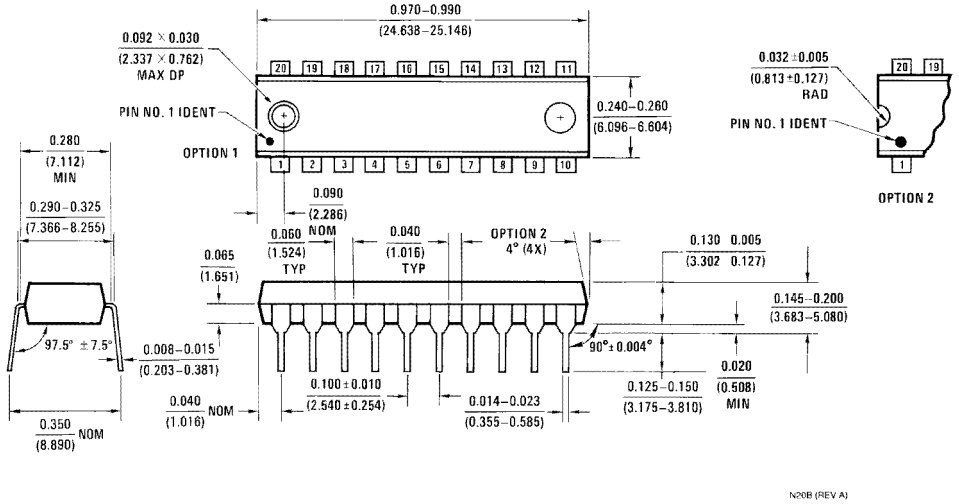

20 Lead Plastic Dual-In-Line Package (P)
NS Package Number N20B

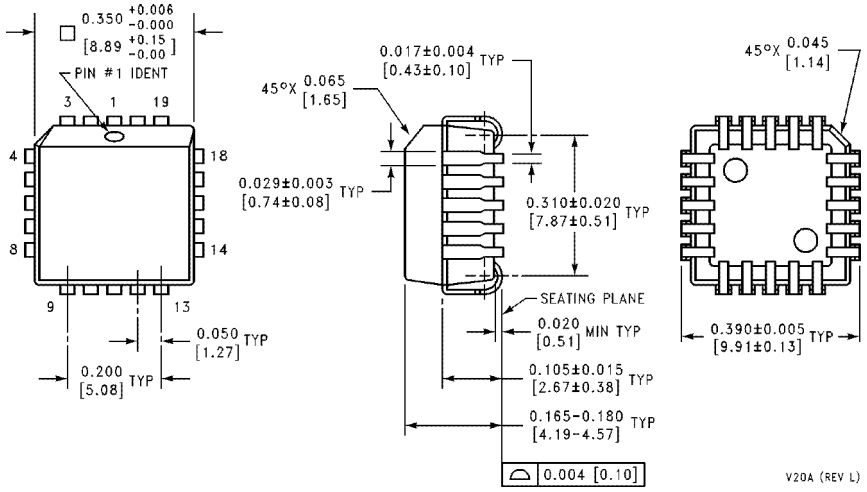

20 Lead Plastic Chip Carrier (Q)
NS Package Number V20A

Physical Dimensions inches (millimeters) (Continued)

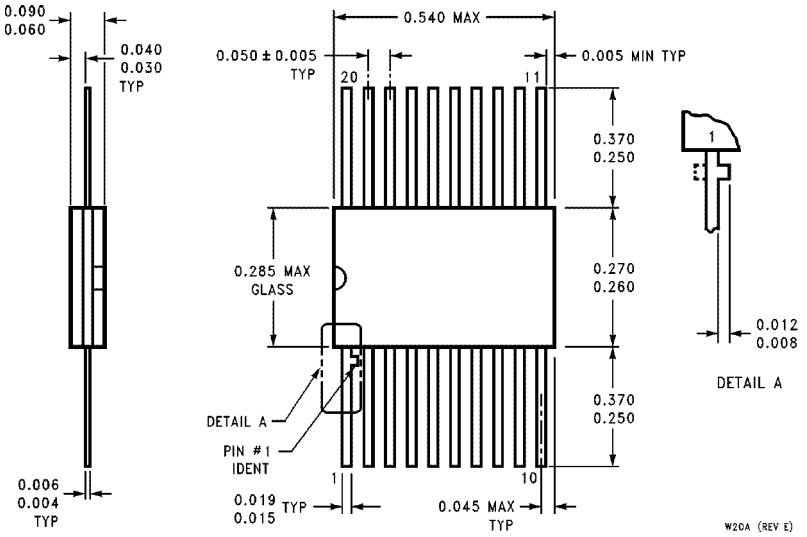

20 Lead Ceramic Flatpak (F)
NS Package Number W20A

LIFE SUPPORT POLICY

NATIONAL'S PRODUCTS ARE NOT AUTHORIZED FOR USE AS CRITICAL COMPONENTS IN LIFE SUPPORT DEVICES OR SYSTEMS WITHOUT THE EXPRESS WRITTEN APPROVAL OF THE PRESIDENT OF NATIONAL SEMICONDUCTOR CORPORATION. As used herein:

1. Life support devices or systems are devices or systems which, (a) are intended for surgical implant into the body, or (b) support or sustain life, and whose failure to perform, when properly used in accordance with instructions for use provided in the labeling, can be reasonably expected to result in a significant injury to the user.
2. A critical component is any component of a life support device or system whose failure to perform can be reasonably expected to cause the failure of the life support device or system, or to affect its safety or effectiveness.

National Semiconductor Corporation
2900 Semiconductor Drive
P.O. Box 58090
Santa Clara, CA 95052-8090
Tel: 1(800) 272-9959
TWX: (910) 339-9240

National Semiconductor GmbH
Livry-Gargan-Str. 10
D-82256 Furstenfeldbruck
Germany
Tel: (81-41) 35-0
Telex: 527649
Fax: (81-41) 35-1

National Semiconductor Japan Ltd.
Sumitomo Chemical
Engineering Center
Bldg. 7F
1-7-1, Nakase, Mihama-Ku
Chiba-City,
Ciba Prefecture 261
Tel: (043) 299-2300
Fax: (043) 299-2500

National Semiconductor Hong Kong Ltd.
13th Floor, Straight Block,
Ocean Centre, 5 Canton Rd.
Tsimshatsui, Kowloon
Hong Kong
Tel: (852) 2737-1600
Fax: (852) 2736-9960

National Semiconductores Do Brazil Ltda.
Rue Deputado Lacorda Franco
120-3A
Sao Paulo-SP
Brazil 05418-000
Tel: (55-11) 212-5066
Telex: 391-1131931 NSBR BR
Fax: (55-11) 212-1181

National Semiconductor (Australia) Pty, Ltd.
Building 16
Business Park Drive
Monash Business Park
Nottinghill, Melbourne
Victoria 3168 Australia
Tel: (3) 558-9999
Fax: (3) 558-9998