A Dimensions: [mm]

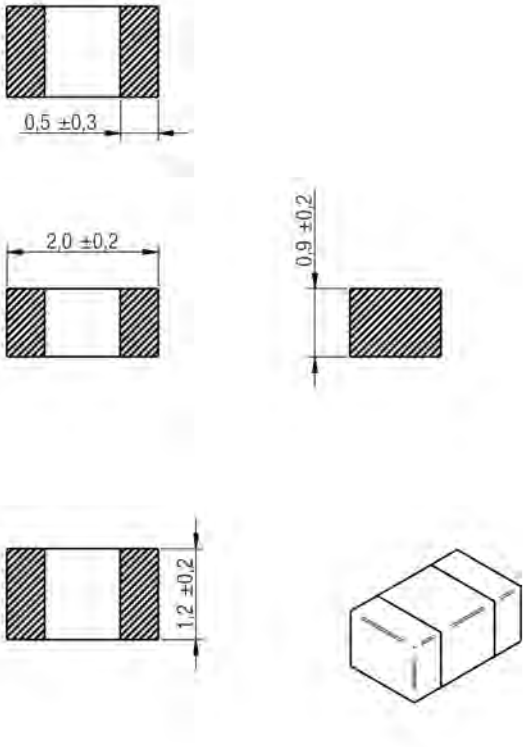

Scale - 10:1

B Land Pattern: [mm]

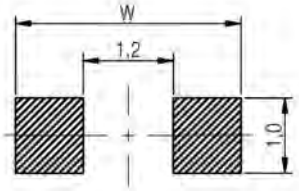

WIDE BAND / HIGH SPEED: W = 3,0
HIGH CURRENT: W = 4,0

Scale - 10:1

C Schematic:

D Electrical Properties:

Properties	Test conditions		Value	Unit	Tol.
Impedance @ 100 MHz	100 MHz	Z	600	Ω	±25%
Maximum Impedance	150 MHz	Z	700	Ω	typ.
Rated Current	ΔT = 20K	I_R	200	mA	max.
DC Resistance		R_{DC}	0.35	Ω	max.
Type			Wide Band		

E General information:

Do not use this part beyond the Rated Current, as this will create excessive heat and can harm the component
Storage Temperature (on Tape & Reel): -20°C to 60°C
Operating Temperature: -55°C to 125°C
Test conditions of Electrical Properties: 20°C, 33% RH if not specified differently

REV	DATE	BY	CHECKED
5.0	2012-03-29	SSt	SMu
4.0	2005-12-16	SSt	-

Projection

Würth Elektronik eiSos GmbH & Co. KG
EMC & Inductive Solutions
Max-Eyth-Str. 1
74638 Waldenburg
Germany
Tel. +49 (0) 79 42 945 - 0
www.we-online.com
eiSos@we-online.com

DESCRIPTION

WE-CBF SMD EMI Suppression Ferrite Bead

Order.- No.

74279204

COMPLIANT RoHS&REACh WÜRTH ELEKTRONIK

SIZE

A4

Size: 0805

This electronic component has been designed and developed for usage in general electronic equipment. Before incorporating this component into any equipment where higher safety and reliability is especially required or if there is the possibility of direct damage or injury to human body, for example in the range of aerospace, aviation, nuclear control, submarine, transportation (automotive control, train control, ship control), transportation signal, disaster prevention, medical, public information network etc, Würth Elektronik eiSos GmbH & Co. KG must be informed before the design-in stage. In addition, sufficient reliability evaluation checks for safety must be performed on every electronic component which is used in electrical circuits that require high safety and reliability functions or performance.

F Typical Impedance Characteristics:

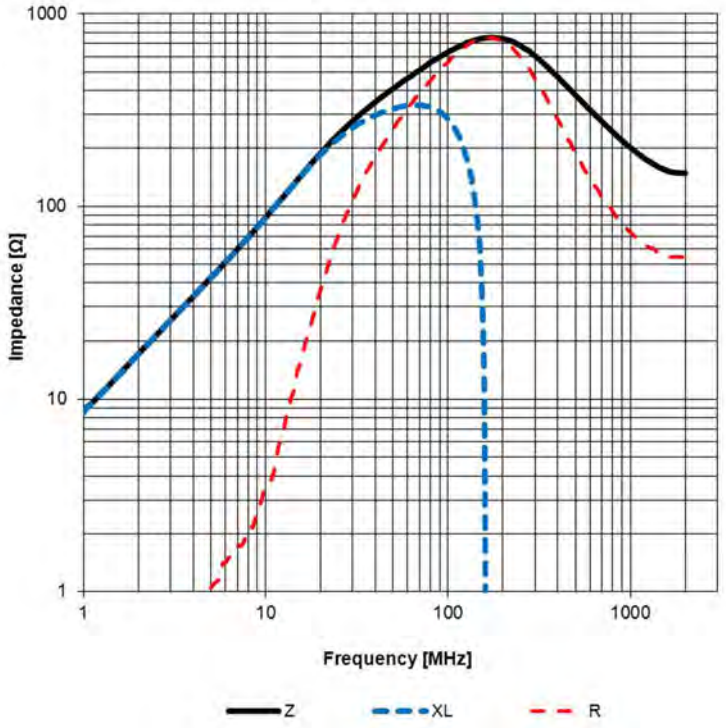

Test Equipment: E4991A or equivalent

F Derating Curve:

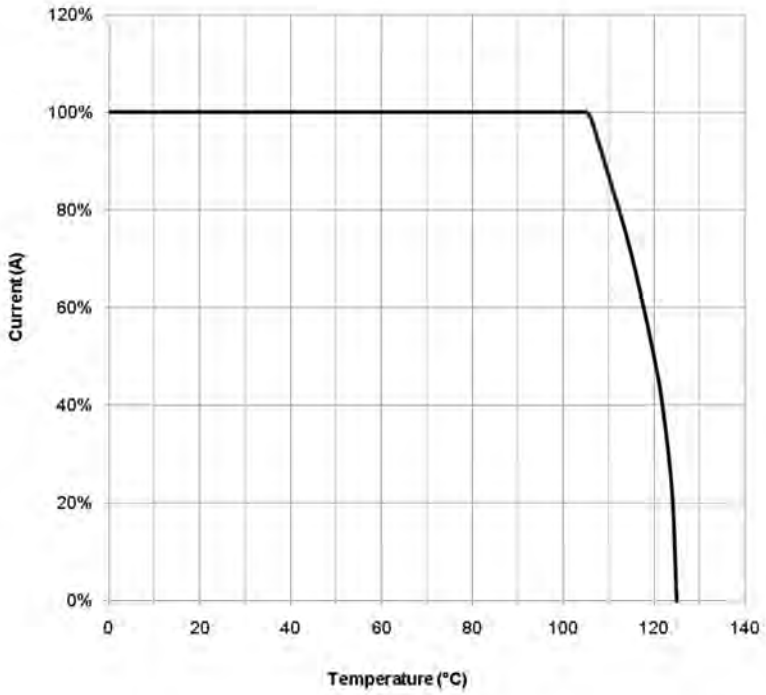

REV	DATE	BY	CHECKED
5.0	2012-03-29	SSt	SMu
4.0	2005-12-16	SSt	-

Projection

Würth Elektronik eiSos GmbH & Co. KG
EMC & Inductive Solutions
Max-Eyth-Str. 1
74638 Waldenburg
Germany
Tel. +49 (0) 79 42 945 - 0
www.we-online.com
eiSos@we-online.com

DESCRIPTION

WE-CBF SMD EMI Suppression Ferrite Bead

Order.- No.

74279204

COMPLIANT RoHS&REACh WÜRTH ELEKTRONIK

SIZE

A4

Size: 0805

This electronic component has been designed and developed for usage in general electronic equipment. Before incorporating this component into any equipment where higher safety and reliability is especially required or if there is the possibility of direct damage or injury to human body, for example in the range of aerospace, aviation, nuclear control, submarine, transportation (automotive control, train control, ship control), transportation signal, disaster prevention, medical, public information network etc, Würth Elektronik eiSos GmbH & Co. KG must be informed before the design-in stage. In addition, sufficient reliability evaluation checks for safety must be performed on every electronic component which is used in electrical circuits that require high safety and reliability functions or performance.

G Packaging Specification: [mm]

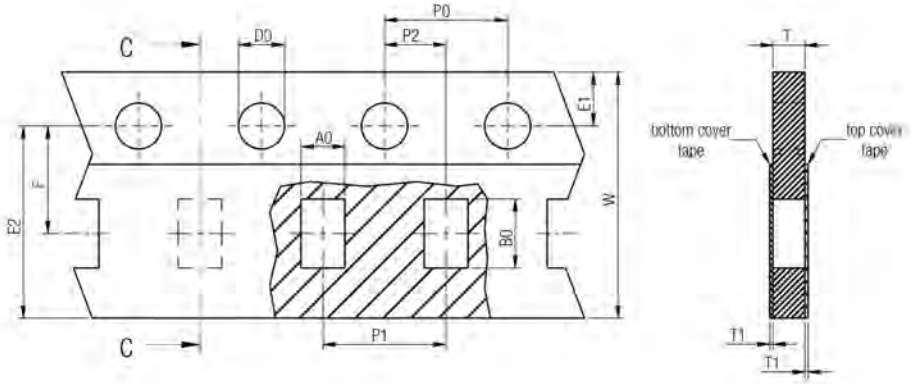

		A0	B0	W	P1	T	T1	D0	E1	E2	F	P0	P2	Tape	Packaging Unit
	tolerance	typ.	typ.	+0,3 -0,1	± 0,1	max.	max.	+0,1 -0,0	± 0,1	min.	± 0,05	± 0,1	± 0,05		
size	0402	0,69	1,19	8,00	2,00	0,66	0,10	1,50	1,75	6,25	3,50	4,00	2,00	Paper	10000
	0603	1,10	1,88	8,00	4,00	1,10	0,10	1,50	1,75	6,25	3,50	4,00	2,00	Paper	4000
	0805	1,42	2,24	8,00	4,00	1,04	0,10	1,50	1,75	6,25	3,50	4,00	2,00	Paper	4000

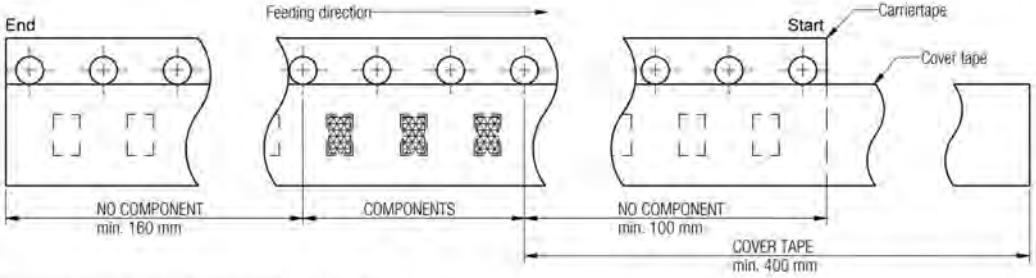

Packaging is referred to the international standard IEC 60286 -3:2007

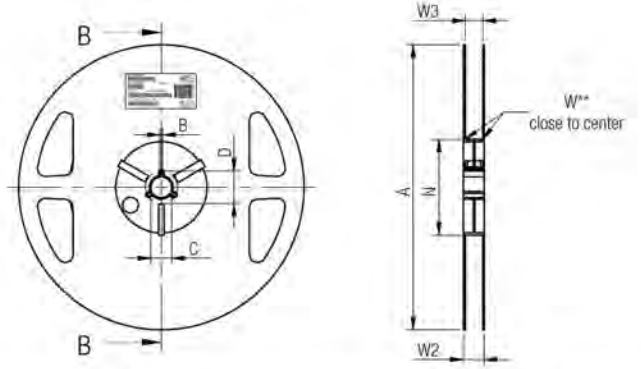

		A	B	C	D	N	W1	W2	W3	W3
tolerance			min.	± 0,8	min.	min.	+1,5	max.	min.	max.
Tape width	8 mm	178,00	1,50	13,00	20,20	50,00	8,40	14,40	7,90	10,90

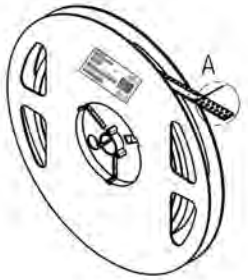

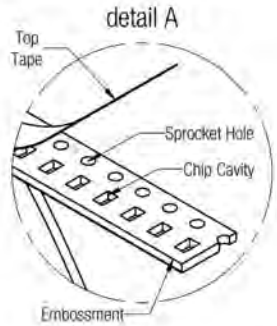

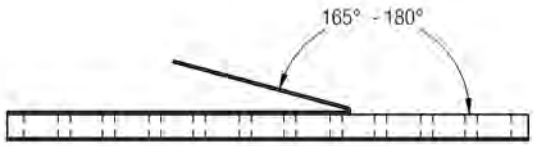

	Pull-of force
Tape width 8 mm	0,1 N - 1,0 N

REV	DATE	BY	CHECKED
5.0	2012-03-29	SSt	SMu
4.0	2005-12-16	SSt	-

Projection

Würth Elektronik eiSos GmbH & Co. KG
EMC & Inductive Solutions
Max-Eyth-Str. 1
74638 Waldenburg
Germany
Tel. +49 (0) 79 42 945 - 0
www.we-online.com
eiSos@we-online.com

DESCRIPTION

WE-CBF SMD EMI Suppression Ferrite Bead

Order.- No.

74279204

COMPLIANT RoHS&REACh WÜRTH ELEKTRONIK

SIZE

A4

Size: 0805

This electronic component has been designed and developed for usage in general electronic equipment. Before incorporating this component into any equipment where higher safety and reliability is especially required or if there is the possibility of direct damage or injury to human body, for example in the range of aerospace, aviation, nuclear control, submarine, transportation (automotive control, train control, ship control), transportation signal, disaster prevention, medical, public information network etc, Würth Elektronik eiSos GmbH & Co. KG must be informed before the design-in stage. In addition, sufficient reliability evaluation checks for safety must be performed on every electronic component which is used in electrical circuits that require high safety and reliability functions or performance.

H Soldering Specifications:

H1: Classification Reflow Profile for SMT components:

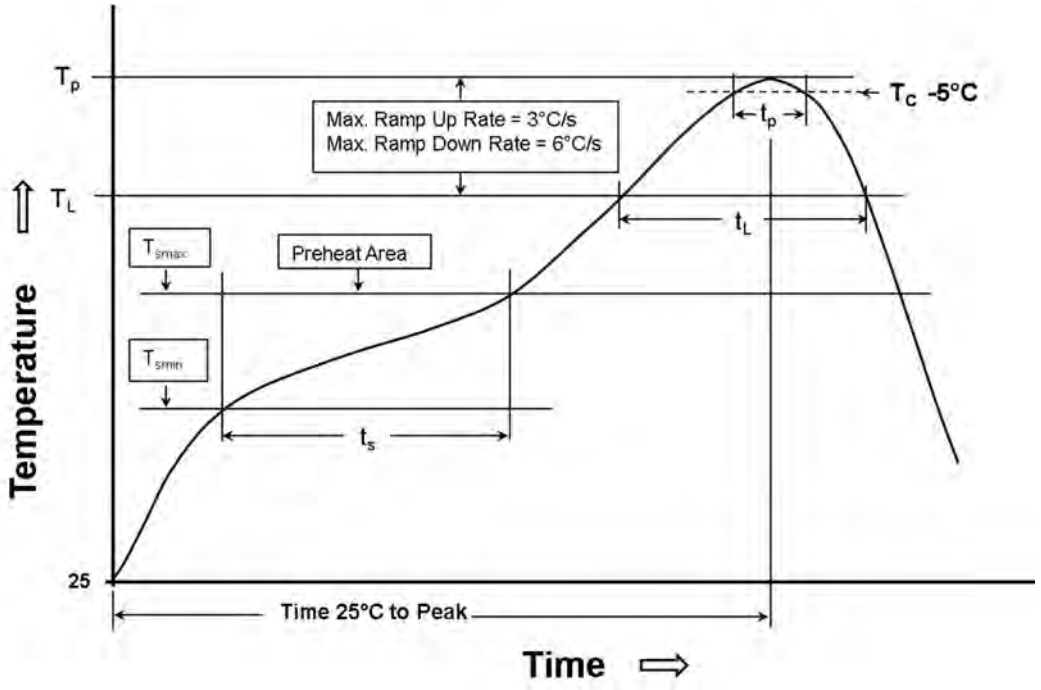

H2: Classification Reflow Profiles

Profile Feature	Pb-Free Assembly
Preheat - Temperature Min (T_{smin}) - Temperature Max (T_{smax}) - Time (t_s) from (T_{smin} to T_{smax})	 150°C 200°C 60-180 seconds
Ramp-up rate (T_L to T_P)	3°C/ second max.
Liquidous temperature (T_L) Time (t_L) maintained above T_L	217°C 60-150 seconds
Peak package body temperature (T_p)	See Table H3
Time within 5°C of actual peak temperature (t_p)	20-30 seconds
Ramp-down rate (T_P to T_L)	6°C/ second max.
Time 25°C to peak temperature	8 minutes max.

refer to IPC/JEDEC J-STD-020D

H3: Package Classification Reflow Temperature

	Package Thickness	Volume mm³ <350	Volume mm³ 350 - 2000	Volume mm³ >2000
PB-Free Assembly	< 1.6 mm	260°C	260°C	260°C
PB-Free Assembly	1.6 - 2.5 mm	260°C	250°C	245°C
PB-Free Assembly	≥ 2.5 mm	250°C	245°C	245°C

refer to IPC/JEDEC J-STD-020D

REV	DATE	BY	CHECKED
5.0	2012-03-29	SSt	SMu
4.0	2005-12-16	SSt	-

Projection

Würth Elektronik eiSos GmbH & Co. KG
EMC & Inductive Solutions
Max-Eyth-Str. 1
74638 Waldenburg
Germany
Tel. +49 (0) 79 42 945 - 0
www.we-online.com
eiSos@we-online.com

DESCRIPTION

WE-CBF SMD EMI Suppression Ferrite Bead

Order.- No.

74279204

COMPLIANT RoHS&REACh WÜRTH ELEKTRONIK

SIZE

A4

Size: 0805

This electronic component has been designed and developed for usage in general electronic equipment. Before incorporating this component into any equipment where higher safety and reliability is especially required or if there is the possibility of direct damage or injury to human body, for example in the range of aerospace, aviation, nuclear control, submarine, transportation (automotive control, train control, ship control), transportation signal, disaster prevention, medical, public information network etc, Würth Elektronik eiSos GmbH & Co. KG must be informed before the design-in stage. In addition, sufficient reliability evaluation checks for safety must be performed on every electronic component which is used in electrical circuits that require high safety and reliability functions or performance.

I Cautions and Warnings:

The following conditions apply to all goods within the product series of WE-CBF of Würth Elektronik eiSos GmbH & Co. KG:

General:
All recommendations according to the general technical specifications of the data-sheet have to be complied with.

The disposal and operation of the product within ambient conditions which probably alloy or harm the component surface has to be avoided.

If the product is potted in customer applications, the potting material might shrink during and after hardening. Accordingly to this the product is exposed to the pressure of the potting material with the effect that the ferrite body and termination is possibly damaged by this pressure and so the electrical as well as the mechanical characteristics are endanger to be affected. After the potting material is cured, the ferrite body and termination of the product have to be checked if any reduced electrical or mechanical functions or destructions have occurred.

The responsibility for the applicability of customer specific products and use in a particular customer design is always within the authority of the customer. All technical specifications for standard products do also apply for customer specific products.

Washing varnish agent that is used during the production to clean the application might damage or change the characteristics of the plating. The washing varnish agent could have a negative effect on the long term function of the product.

Direct mechanical impact to the product shall be prevented as the ferrite material of the ferrite body could flake or in the worst case it could break.

Product specific:
Follow all instructions mentioned in the datasheet, especially:

- The solder profile has to be complied with according to the technical reflow soldering specification, otherwise no warranty will be sustained.
- Wave soldering is only allowed after evaluation and approval.
- All products are supposed to be used before the end of the period of 12 months based on the product date-code, if not a 100% solderability can´t be warranted.
- Violation of the technical product specifications such as exceeding the nominal rated current will result in the loss of warranty.

REV	DATE	BY	CHECKED
5.0	2012-03-29	SSt	SMu
4.0	2005-12-16	SSt	-

Projection

Würth Elektronik eiSos GmbH & Co. KG
EMC & Inductive Solutions
Max-Eyth-Str. 1
74638 Waldenburg
Germany
Tel. +49 (0) 79 42 945 - 0
www.we-online.com
eiSos@we-online.com

DESCRIPTION

WE-CBF SMD EMI Suppression Ferrite Bead

Order.- No.

74279204

COMPLIANT RoHS&REACh WÜRTH ELEKTRONIK

SIZE

A4

Size: 0805

This electronic component has been designed and developed for usage in general electronic equipment. Before incorporating this component into any equipment where higher safety and reliability is especially required or if there is the possibility of direct damage or injury to human body, for example in the range of aerospace, aviation, nuclear control, submarine, transportation (automotive control, train control, ship control), transportation signal, disaster prevention, medical, public information network etc, Würth Elektronik eiSos GmbH & Co. KG must be informed before the design-in stage. In addition, sufficient reliability evaluation checks for safety must be performed on every electronic component which is used in electrical circuits that require high safety and reliability functions or performance.

J Important Notes:

The following conditions apply to all goods within the product range of Würth Elektronik eiSos GmbH & Co. KG:

1. General Customer Responsibility
Some goods within the product range of Würth Elektronik eiSos GmbH & Co. KG contain statements regarding general suitability for certain application areas. These statements about suitability are based on our knowledge and experience of typical requirements concerning the areas, serve as general guidance and cannot be estimated as binding statements about the suitability for a customer application. The responsibility for the applicability and use in a particular customer design is always solely within the authority of the customer. Due to this fact it is up to the customer to evaluate, where appropriate to investigate and decide whether the device with the specific product characteristics described in the product specification is valid and suitable for the respective customer application or not.

2. Customer Responsibility related to Specific, in particular Safety-Relevant Applications
It has to be clearly pointed out that the possibility of a malfunction of electronic components or failure before the end of the usual lifetime cannot be completely eliminated in the current state of the art, even if the products are operated within the range of the specifications.

In certain customer applications requiring a very high level of safety and especially in customer applications in which the malfunction or failure of an electronic component could endanger human life or health it must be ensured by most advanced technological aid of suitable design of the customer application that no injury or damage is caused to third parties in the event of malfunction or failure of an electronic component.

3. Best Care and Attention
Any product-specific notes, warnings and cautions must be strictly observed.

4. Customer Support for Product Specifications
Some products within the product range may contain substances which are subject to restrictions in certain jurisdictions in order to serve specific technical requirements. Necessary information is available on request. In this case the field sales engineer or the internal sales person in charge should be contacted who will be happy to support in this matter.

5. Product R&D
Due to constant product improvement product specifications may change from time to time. As a standard reporting procedure of the Product Change Notification (PCN) according to the JEDEC-Standard inform about minor and major changes. In case of further queries regarding the PCN, the field sales engineer or the internal sales person in charge should be contacted. The basic responsibility of the customer as per Section 1 and 2 remains unaffected.

6. Product Life Cycle
Due to technical progress and economical evaluation we also reserve the right to discontinue production and delivery of products. As a standard reporting procedure of the Product Termination Notification (PTN) according to the JEDEC-Standard we will inform at an early stage about inevitable product discontinuance. According to this we cannot guarantee that all products within our product range will always be available. Therefore it needs to be verified with the field sales engineer or the internal sales person in charge about the current product availability expectancy before or when the product for application design-in disposal is considered.
The approach named above does not apply in the case of individual agreements deviating from the foregoing for customer-specific products.

7. Property Rights
All the rights for contractual products produced by Würth Elektronik eiSos GmbH & Co. KG on the basis of ideas, development contracts as well as models or templates that are subject to copyright, patent or commercial protection supplied to the customer will remain with Würth Elektronik eiSos GmbH & Co. KG.

8. General Terms and Conditions
Unless otherwise agreed in individual contracts, all orders are subject to the current version of the “General Terms and Conditions of Würth Elektronik eiSos Group”, last version available at www.we-online.com.

REV	DATE	BY	CHECKED
5.0	2012-03-29	SSt	SMu
4.0	2005-12-16	SSt	-

Projection

Würth Elektronik eiSos GmbH & Co. KG
EMC & Inductive Solutions
Max-Eyth-Str. 1
74638 Waldenburg
Germany
Tel. +49 (0) 79 42 945 - 0
www.we-online.com
eiSos@we-online.com

DESCRIPTION

WE-CBF SMD EMI Suppression Ferrite Bead

Order.- No.

74279204

COMPLIANT RoHS&REACh WÜRTH ELEKTRONIK

SIZE

A4

Size: 0805

This electronic component has been designed and developed for usage in general electronic equipment. Before incorporating this component into any equipment where higher safety and reliability is especially required or if there is the possibility of direct damage or injury to human body, for example in the range of aerospace, aviation, nuclear control, submarine, transportation (automotive control, train control, ship control), transportation signal, disaster prevention, medical, public information network etc, Würth Elektronik eiSos GmbH & Co. KG must be informed before the design-in stage. In addition, sufficient reliability evaluation checks for safety must be performed on every electronic component which is used in electrical circuits that require high safety and reliability functions or performance.

Mouser Electronics

Authorized Distributor

Click to View Pricing, Inventory, Delivery & Lifecycle Information:

Wurth Electronics:

74279204