A5.1 CHOKES (E-CORE) | EF 12.6/3.7 SERIES THD/SMD

- Storage choke
- Filtering inductance
- Compact, standard packages
- SMD or THD
- High voltage strength 500V (typical) across windings

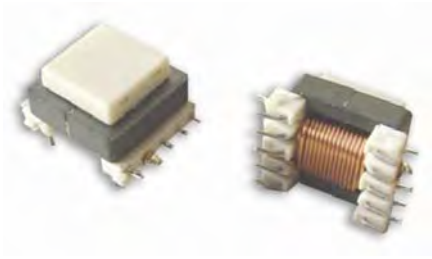

Electrical specifications @ 25°C – Operating temperature -40°C to +125°C							
L_0 (µH)	Tolerance ± 10%	I_{rms}* (mA)	I_{sat}** (mA)	R_{DC} (mΩ ± 20%)	Schematic	Part number	
						SMD	THD
27		3000	3000	44	2	505 03 500 27	575 08 500 27
33		3000	2400	44	2	505 03 500 33	575 08 500 33
39		3000	2000	44	2	505 03 500 39	575 08 500 39
47		3000	1700	44	2	505 03 500 47	575 08 500 47
56		1700	3000	125	1	505 03 500 56	575 08 500 56
68		1700	2000	125	1	505 03 500 68	575 08 500 68
82		1700	1800	125	1	505 03 500 82	575 08 500 82
100		1700	1500	125	1	505 03 501 00	575 08 501 00
120		1200	1500	235	1	505 03 501 20	575 08 501 20
150		1200	1300	235	1	505 03 501 50	575 08 501 50
180		1200	1000	235	1	505 03 501 80	575 08 501 80
220		1200	800	235	1	505 03 502 20	575 08 502 20
270		620	1300	875	1	505 03 502 70	575 08 502 70
330		620	1100	875	1	505 03 503 30	575 08 503 30
390		620	900	875	1	505 03 503 90	575 08 503 90
470		620	750	875	1	505 03 504 70	575 08 504 70
560		570	800	985	1	505 03 505 60	575 08 505 60
680		570	700	985	1	505 03 506 80	575 08 506 80
820		570	500	985	1	505 03 508 20	575 08 508 20
1000		570	400	985	1	505 03 510 00	575 08 510 00

*I_{DC} rated for 40°C temperature rise;
**I_{sat} is the current, at which the component inductance drops by 10% (typical) @ 25°C

Mechanical SMD

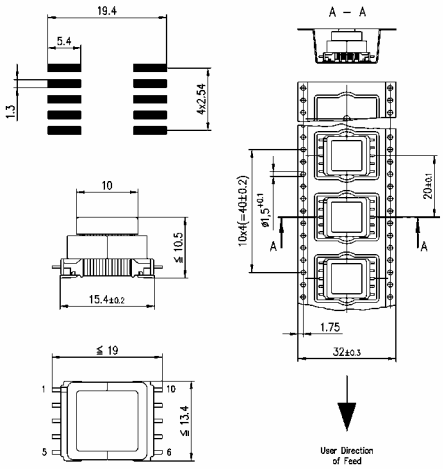

Schematic THD

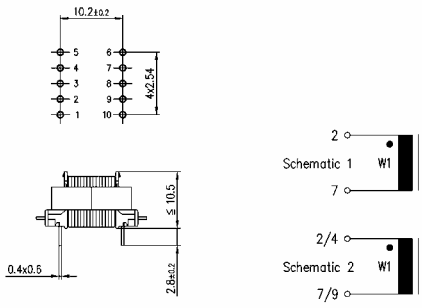

A5.1 CHOKES (E-CORE) | EVD 15 SERIES THD/SMD

- Storage choke
- Filtering inductance
- Compact, standard packages
- SMD or THD
- High voltage strength 500V (typical) across windings

Electrical specifications @ 25°C - Operating temperature -40°C to +125°C							
L_0 (µH)	Tolerance ± 10%	I_{rms}* (mA)	I_{sat}** (mA)	R_{DC} (mΩ ± 20%)	Schematic	Part number	
						SMD	THD
33		4800	5000	25	3	505 04 500 33	575 26 500 33
39		4800	4000	25	3	505 04 500 39	575 26 500 39
47		4800	3300	25	3	505 04 500 47	575 26 500 47
56		4800	2700	25	3	505 04 500 56	575 26 500 56
68		3300	4000	56	2	505 04 500 68	575 26 500 68
82		3300	3200	56	2	505 04 500 82	575 26 500 82
100		3300	2500	56	2	505 04 501 00	575 26 501 00
120		3300	2100	56	2	505 04 501 20	575 26 501 20
150		2000	2700	140	1	505 04 501 50	575 26 501 50
180		2000	2300	140	1	505 04 501 80	575 26 501 80
220		2000	1900	140	1	505 04 502 20	575 26 502 20
270		2000	1500	140	1	505 04 502 70	575 26 502 70
330		1400	1700	280	1	505 04 503 30	575 26 503 30
390		1400	1400	280	1	505 04 503 90	575 26 503 90
470		1400	1200	280	1	505 04 504 70	575 26 504 70
560		1400	1000	280	1	505 04 505 60	575 26 505 60
680		1000	1300	520	2	505 04 506 80	575 26 506 80
820		1000	1000	520	2	505 04 508 20	575 26 508 20
1000		1000	800	520	2	505 04 510 00	575 26 510 00
1200		1000	650	520	2	505 04 512 00	575 26 512 00

*I_{DC} rated for 40°C temperature rise;
**I_{sat} is the current, at which the component inductance drops by 10% (typical) @ 25°C

Mechanical SMD

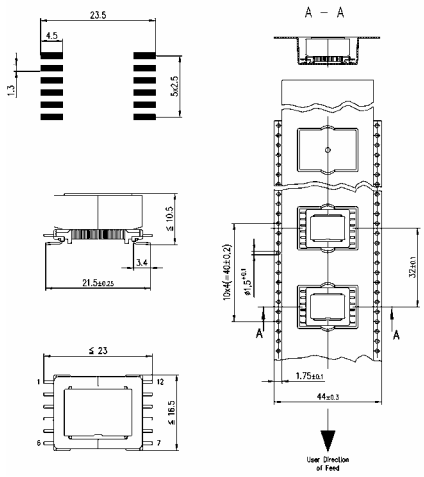
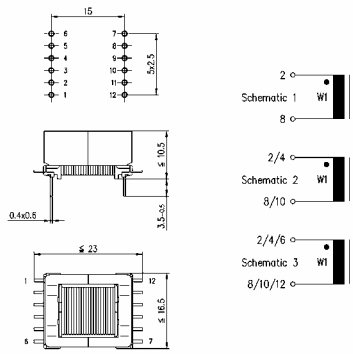
Schematic THD