THIS DRAWING IS UNPUBLISHED. RELEASED FOR PUBLICATION -.- .
© COPYRIGHT – BY TYCO ELECTRONICS CORPORATION. ALL RIGHTS RESERVED.

LOC	DIST
H	—

REVISIONS

P	LTR	DESCRIPTION	DATE	DWN	APVD
	H2	ECR-07-019485	18SEP2007	JvH	BM

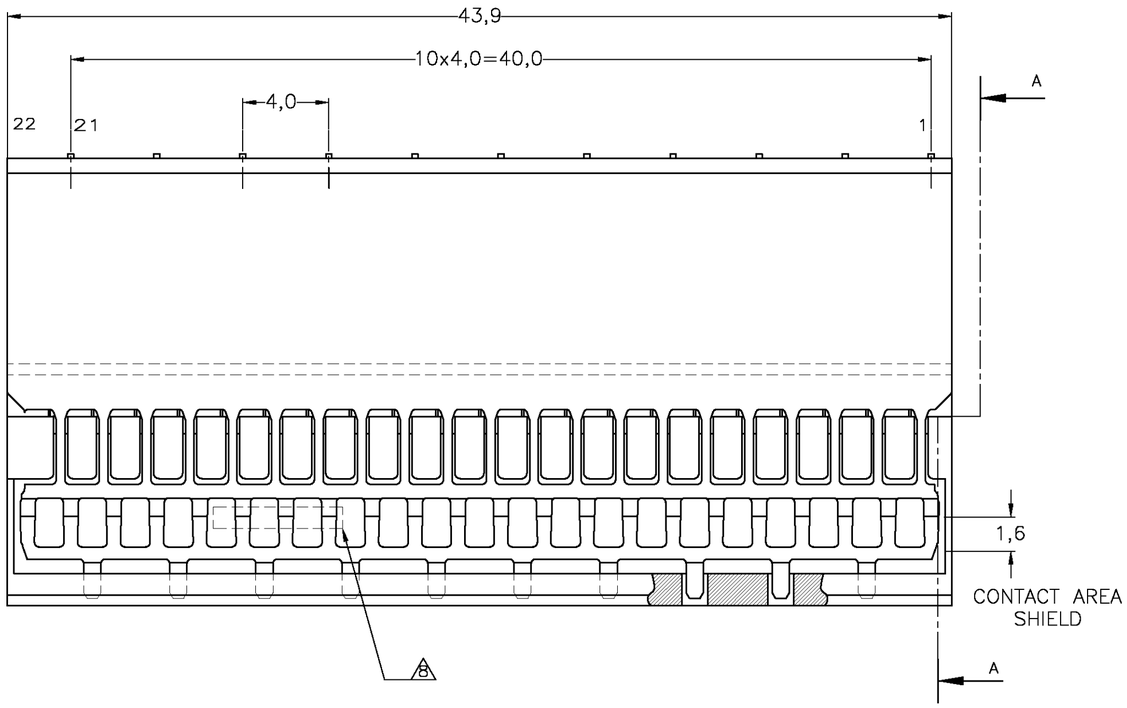

SECTION A–A

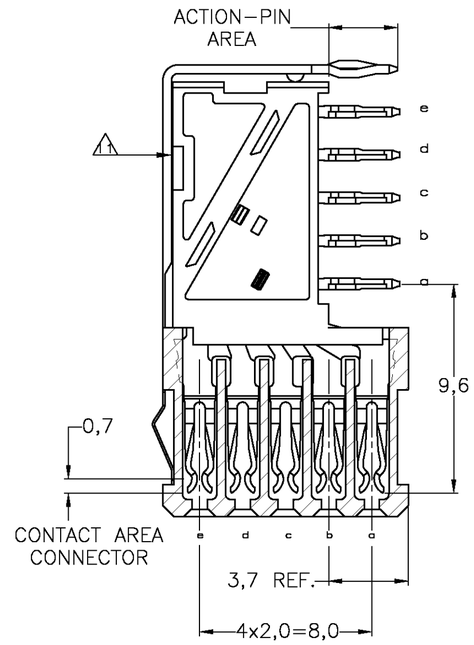

NOTES:

1. MATERIAL CONTACTS; PHOSPHORBRONZE
MATERIAL HOUSING; GLASSFILLED POLYESTER (GRAY)
2. GENERAL PLATING SPECIFICATION: UNDERPLATING (ENTIRE CONTACT): 1,27µm NICKEL MIN. AND ACTION PIN: 0,5µm TIN–LEAD MIN. FOR PLATING OF MATING SURFACES SEE APPLICABLE SPECIFICATION REFERENCE FOR EACH DASH NUMBER.
3. CONFORMS TO ALL TESTING ACCORDING IEC 61076–4–101 PERFORMANCE LEVEL 2.
4. CONFORMS TO ALL TESTING ACCORDING IEC 61076–4–101 PERFORMANCE LEVEL 1.
5. CONNECTOR TESTED AND QUALIFIED AGAINST TELCORDIA GR–1217–CORE QUALITY LEVEL III, CENTRAL OFFICE APPLICATIONS.
6. CONNECTOR LUBRICATED WITH TELCORDIA APPROVED LUBRICANT.
7. PLATING SHIELD:
CONTACT AREA : 0,76µm Au MIN.
ACTION PIN : 0,5µm SnPb MIN.
REMAINDER : Ni
8. ASSEMBLY PRINTED WITH P/N AND DATECODE THE MARKING CAN APPEAR ON THE FRONT SIDE OR BACK SIDE.
9. HOLE PATTERN FOR FEMALE CONNECTOR TYPE B–22 COLUMNS 110 PLATED–THROUGH HOLES AT 2x2mm SQUARE GRID
10. ROW "f" 11 PLATED THROUGH HOLES FOR UPPERSHIELD
11. SHIELD MOUNTED ON CONNECTOR WITH DOUBLE SIDED ADHESIVE TAPE OR ADHESIVE
12. BASIC P.N. LOWERSHIELD: 352468

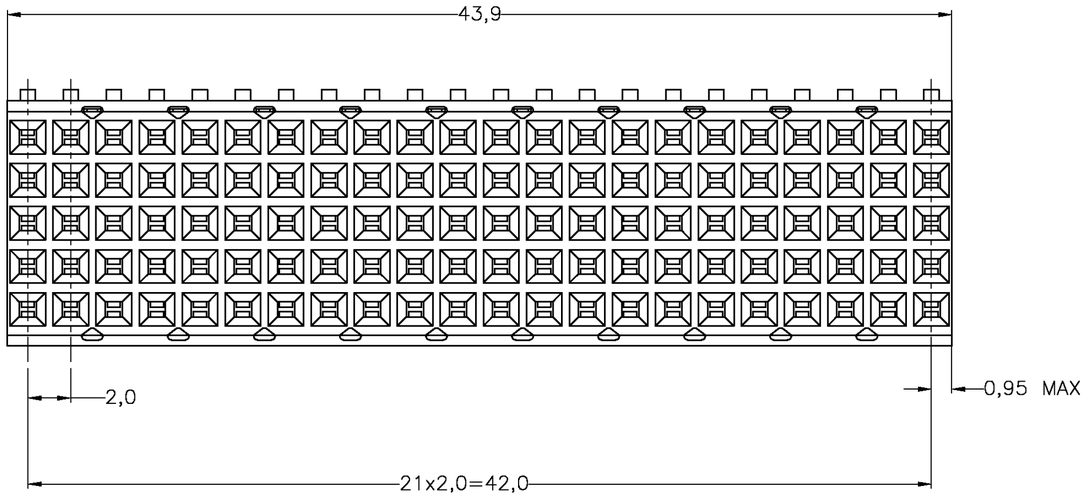

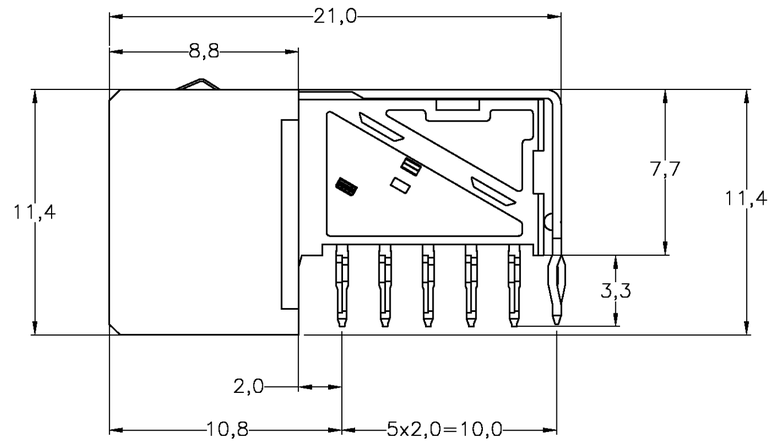

SCALE 2,5:1
COMPONENT SIDE AS SHOWN
RECOMMENDED PCB–HOLE LAY–OUT

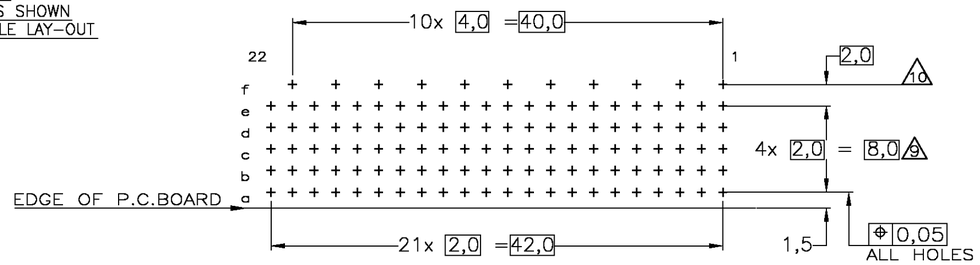

P.C.B. HOLE DIM. ACTION PIN
FOR DETAILS SEE
APPLICATION SPECIFICATION

FINISH	MATERIAL	PARTNUMBER
2 5 6 7	1	352152–9
2 4 7	1	352152–4
2 3 7	1	352152–1

THIS DRAWING IS A CONTROLLED DOCUMENT.

DIMENSIONS: MM

TOLERANCES UNLESS OTHERWISE SPECIFIED:
0 PLC ± –
1 PLC ± –
2 PLC ± –
3 PLC ± –
4 PLC ± –
ANGLES ± –

MATERIAL –
FINISH –

DWN D. TRUREN 23SEP96
CHK –
APVD –
PRODUCT SPEC 108–19082
APPLICATION SPEC 114–19029
WEIGHT –

Tyco Electronics
Tyco Electronics Corporation
s–HertogenBosch,Netherlands,

NAME
Z–PACK 2MM HM
TYPE B – 22 COLUMNS
PRE–SHIELDED RECEPTACLE

SIZE A2 | CAGE CODE 00779 | DRAWING NO C–352152 | RESTRICTED TO –

CUSTOMER DRAWING | SCALE NTS | SHEET 1 OF 1 | REV H2

352152