THIS DRAWING IS UNPUBLISHED. RELEASED FOR PUBLICATION -, .
© COPYRIGHT By - ALL RIGHTS RESERVED.

LOC	DIST
CM	00

REVISIONS

P	LTR	DESCRIPTION	DATE	DWN	APVD
	M2	REVISED PER ECR-12-011660	25JAN13	KH	TM

1 PARTS MUST COMPLY WITH AMP SOLDERABLITY SPEC 109-11-3.

2 CONTACT IS STAMPED FROM PRE-PLATED STOCK WHICH IS PLATED OVERALL WITH 0.00127 [.000050] NICKEL, THEN STRIPED WITH 0.00076 [.000030] GOLD IN CONTACT AREA INDICATED AND TIN-LEAD ON SOLDER TAIL END.

3 CIRCUIT IDENTIFICATION CHARACTERS ARE ADJACENT TO THE INDICATED CAVITIES, BUT LOCATION AND ORIENTATION MAY DIFFER FROM PRINT.

4 CONTACT IS PLATED OVERALL WITH 0.00127 [.000050] NICKEL, THEN 0.00076 [.000030] GOLD OVER CONTACT LENGTH INDICATED AND MATTE TIN ON SOLDER TAIL END.

5 SUPERSEDED BY 350827-4

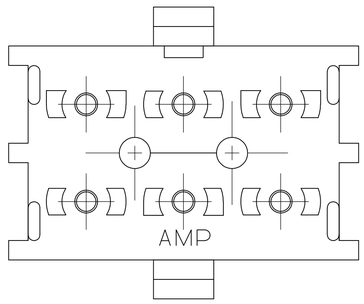

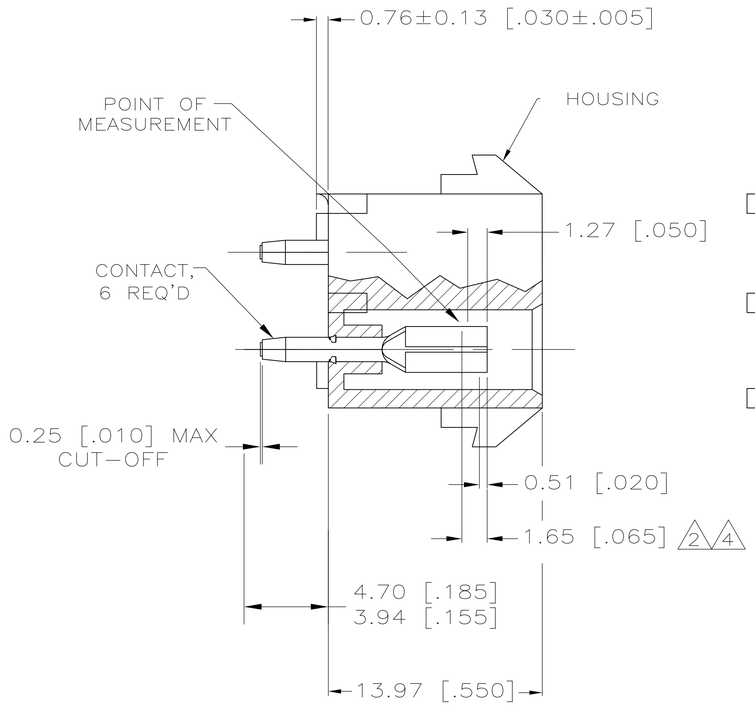

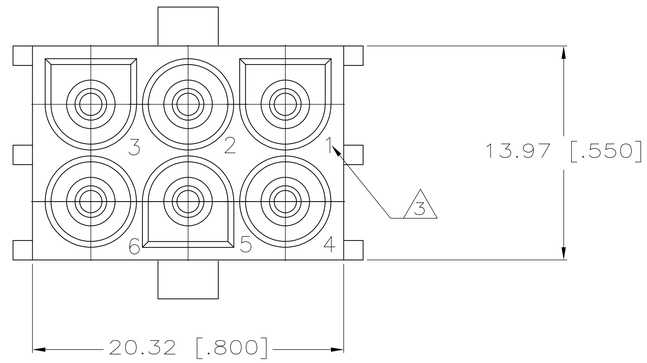

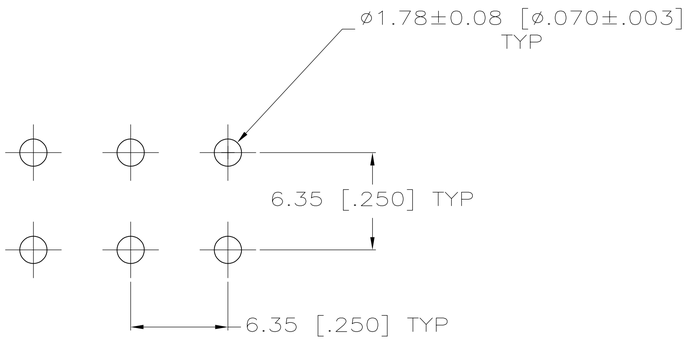

RECOMMENDED LAYOUT FOR 1.58 [.062] THICK PC BOARD

	CONTACT	HOUSING	PART NO
	PH BRZ GOLD 4	NYLON,UL 94V-0	350827-4
5	PH BRZ GOLD 2	NYLON,UL 94V-0	350827-2
	PH BRZ TIN	NYLON,UL 94V-0	350827-1

THIS DRAWING IS A CONTROLLED DOCUMENT.

DIMENSIONS: mm [INCHES]

TOLERANCES UNLESS OTHERWISE SPECIFIED:
0 PLC ±
1 PLC ±
2 PLC ±
3 PLC ± 0.13 [.005]
4 PLC ±
ANGLES ±

MATERIAL: SEE TABLE
FINISH: SEE TABLE

DWN K. WHITAKER 110CT2005
CHK S. RIDGILL 110CT2005
APVD S. RIDGILL 110CT2005
PRODUCT SPEC
APPLICATION SPEC —
WEIGHT

TE Connectivity

NAME: 6 CIRCUIT UNIVERSAL MATE-N-LOK (TM) P.C. BOARD SOCKET HEADER ASSEMBLY

SIZE	CAGE CODE	DRAWING NO	RESTRICTED TO
A1	00779	C-350827	

CUSTOMER DRAWING | SCALE 5:1 | SHEET 1 OF 1 | REV M2

4805 (3/11)

Mouser Electronics

Authorized Distributor

Click to View Pricing, Inventory, Delivery & Lifecycle Information:

TE Connectivity:

350827-1