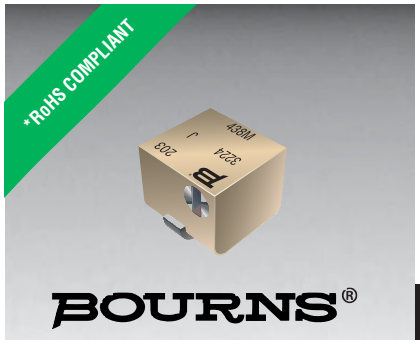

Features

- Surface Mount 4 mm Square / Multiturn Cermet / Industrial / Sealed
- Sealed to withstand board wash processing
- Pick and place centering design, with flush adjustment
- 4mm design meets EIA/EIAJ/IPC/VECI SMD standard trimmer footprint
- Low CRV - 1 %
- RoHS compliant* - see processing information on lead free surface mount trimmers

3224 - 4 mm SMD Trimming Potentiometer

Electrical Characteristics

Standard Resistance Range
..... 10 to 2 megohm
(see standard resistance table)
Resistance Tolerance .....±10 % std.
Absolute Minimum Resistance
.....1 % or 2.0 ohms
(whichever is greater)
Contact Resistance Variation
.....1 % or 3 ohms max.
Resolution .....Essentially Infinite
Insulation Resistance .....500 vdc.
100 megohms min.
Dielectric Strength
Sea Level .....600 vac (1 minute)
Adjustment Angle ..... 11 turns nom.

Environmental Characteristics

Power Rating (300 volts max.)
85 °C.....0.25 watt
150 °C.....0 watt
Temperature Range .....-65 °C to +150 °C
Temperature Coefficient .....±100 ppm/°C
Humidity .....MIL-STD 202 Method 106
TRS ±2 %; IR 10 megohms
Vibration ..... 20 G TRS±1 %; VRS ±1 %
Shock ..... 100 G TRS ±1 %; VRS±1 %
Load Life.... @ 85 °C rated power 1,000 hours
TRS.....3 ohms or 3 %
(whichever is greater)
Rotational Cycling ..... 200 cycles
TRS.....3 ohms or 3 %
(whichever is greater)
Thermal Shock ..... 5 cycles
TRS±2 %; VRS±1 %

Physical Characteristics

Mechanical Stop .....Wiper idles
Torque..... 180 g-cm max.
Weight .....Approximately 0.01 oz.
Marking..... Manufacturer's code,
resistance code and date code
Solderability..... Per MIL-STD-202,
Method 208
Wiper .....50 % (Actual TR) ±10 %
Flammability UL94V0
Pushover Strength
J, G .....4.4 lbs.
W, X .....1 lb.
Adjustment Tool..... H-91

How To Order

3224 J - 1 - 502 E

Model
Style
Standard or Modified Product Indicator
-1= IR Reflow (standard)
†-2= Wave Solderable
-FW5= .070 " ± .010 " Shaft Extension
-GJ4= MSL 2a Packaging (for -1 only)
Resistance Code
Embossed Tape Designator
E = Style J, G: 500 pcs./7 " reel (standard)
Style W: 250 pcs./7 " reel (standard)
Style X: 200 pcs./7 " reel (standard)
G = Style J, G: 1500 pcs./13 " reel (standard)
Style W: 1000 pcs./13 " reel (standard)
Style X: 850 pcs./13 " reel (standard)
Blank = Style J, G: 1500 pcs./13 " reel (FW5)
Style W, X: 600 pcs./13 " reel (FW5)

Consult factory for other available options.
† -2 has a treated stainless steel shaft

Product Dimensions

3224J Side Adjust

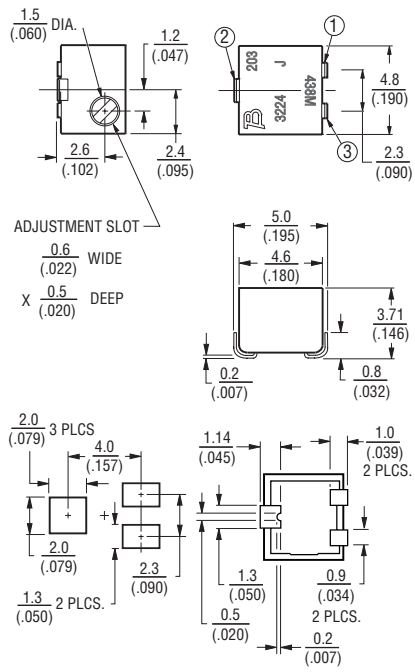

3224G Side Adjust

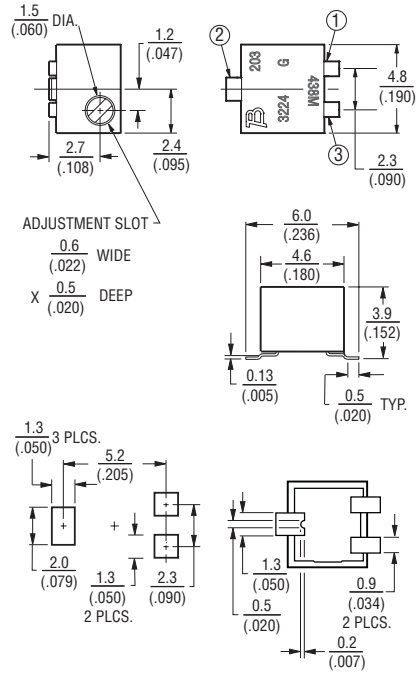

3224W Top Adjust

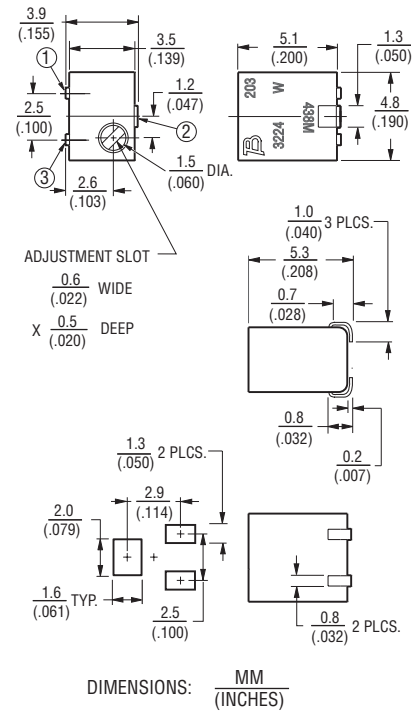

3224X Top Adjust

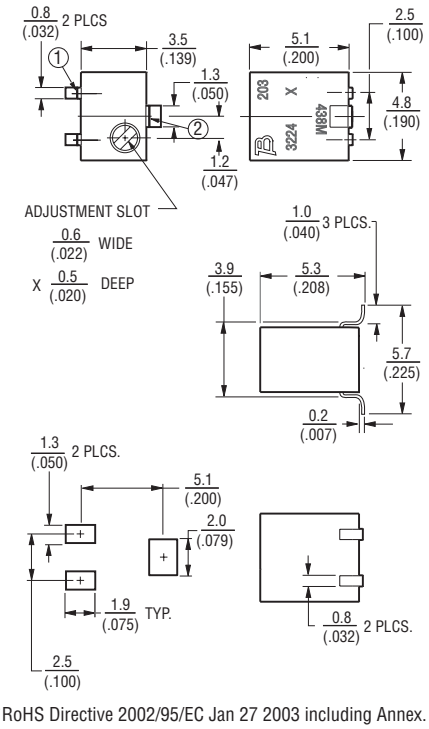

DIMENSIONS: MM (INCHES)

*RoHS Directive 2002/95/EC Jan 27 2003 including Annex.
Specifications are subject to change without notice.
Customers should verify actual device performance in their specific applications

Additional Features

- Top and side adjust styles
- J-hook, and gull-wing
- Patent #5047746 advanced drive/wiper mechanism

3224 - Packaging Specifications

BOURNS®

J & G Styles

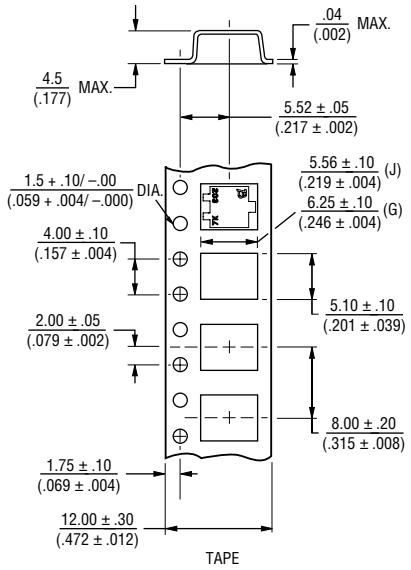

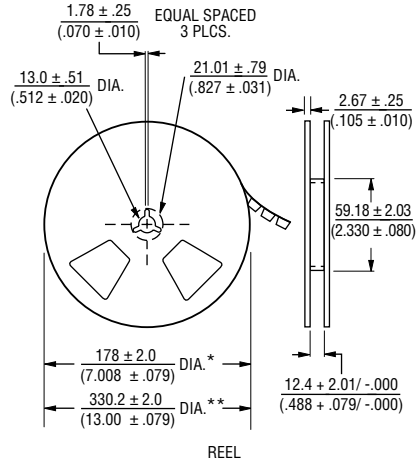

* Embossed Tape Designator "E"
**Embossed Tape Designator "G"
(See How To Order chart for further information.)

Cover tape peel strength: Meets EIA specification 481.

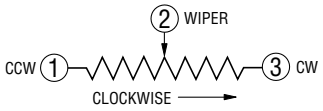

W Style

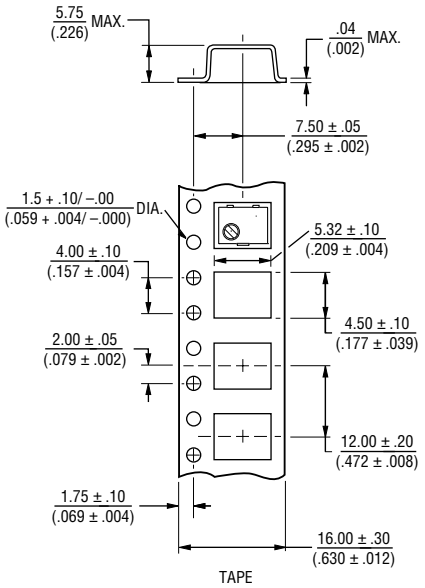

W & X Style Reel

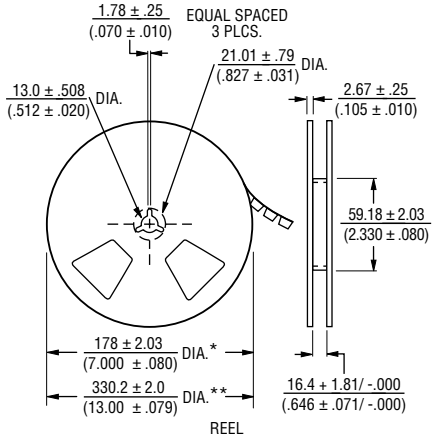

* Embossed Tape Designator "E"
**Embossed Tape Designator "G"
(See How To Order chart for further information.)

Cover tape peel strength: Meets EIA specification 481.

DIMENSIONS: MM (INCHES)

TOLERANCES: ± 0.25 (.010) EXCEPT WHERE NOTED

X Style

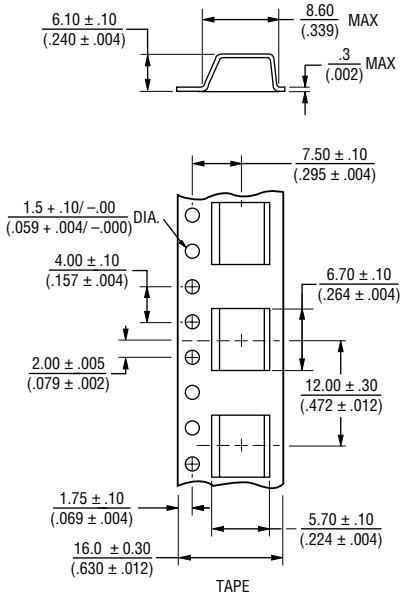

Standard Resistance Table

Resistance (Ohms)	Resistance Code
10	100
20	200
50	500
100	**101**
200	**201**
500	**501**
1,000	**102**
2,000	**202**
5,000	**502**
10,000	**103**
20,000	**203**
50,000	**503**
100,000	**104**
200,000	204
500,000	504
1,000,000	105
2,000,000	205

Popular distribution values listed in boldface.
Special resistances available.

Specifications are subject to change without notice.
Customers should verify actual device performance in their specific applications