HIGH POWER
NPN POWER TRANSISTORS

2N3772

60 VOLTS
20 AMP, 150 WATTS

These high power NPN power transistors are designed for linear amplifiers, series pass regulators, and inductive switching applications.

Features:

- Forward biased second breakdown current capability
  $I_{S/b}$ = 2.5 A @ V_{CE} = 60 V

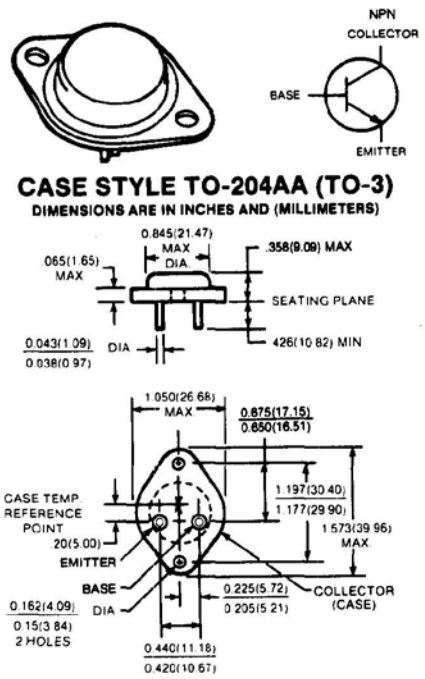

maximum ratings (T_A = 25° C) (unless otherwise specified)

RATING	SYMBOL	2N3772	UNITS
Collector-Emitter Voltage	V_{CEO}	60	Volts
Collector-Base Voltage	V_{CBO}	100	Volts
Emitter Base Voltage	V_{EBO}	7	Volts
Collector Current — Continuous Peak	I_C I_{CM}	20 30	A
Base Current — Continuous	I_B	5 15	A
Total Power Dissipation @ T_C = 25° C Derate above 25° C	P_D	150 0.855	Watts W/° C
Operating and Storage Junction Temperature Range	T_J, T_{STG}	-65 to +200	° C

thermal characteristics

Thermal Resistance, Junction to Case	$R_{\theta JC}$	1.17	° C/W
Maximum Lead Temperature for Soldering Purposes: ⅛" from Case for 5 Seconds	T_L	260	° C

electrical characteristics (T_C = 25° C) (unless otherwise specified)

CHARACTERISTIC	SYMBOL	MIN	TYP	MAX	UNIT
off characteristics					
Collector-Emitter Sustaining Voltage (I_C = .2A)	$V_{CEO(sus)}$	60	—	—	Volts
Collector-Emitter Sustaining Voltage (I_C = .2A, $V_{EB(off)}$ = -1.5V, R_{BE} = 100 Ohms)	V_{CEX}	80	—	—	Volts
Collector Cutoff Current (V_{CB} = 100V)	I_{CBO}	—	—	5	mA
Collector Cutoff Current (V_{CE} = 50V)	I_{CEO}	—	—	10	
Emitter Cutoff Current (V_{EB} = 7V)	I_{EBO}	—	—	5	mA
second breakdown					
Second Breakdown with Base Forward Biased	FBSOA	SEE FIGURE 3			
on characteristics					
DC Current Gain (I_C = 10A, V_{CE} = 4V) (I_C = 20A, V_{CE} = 4V)	h_{FE}	15 5	— —	60 —	—
Collector-Emitter Saturation Voltage (I_C = 10A, I_B = 1.0A) (I_C = 20A, I_B = 4A)	$V_{CE(sat)}$	— —	— —	1.4 4	V V
Base-Emitter Voltage (I_C = 10A, V_{CE} = 4V)	$V_{BE(on)}$	—	—	2.2	V

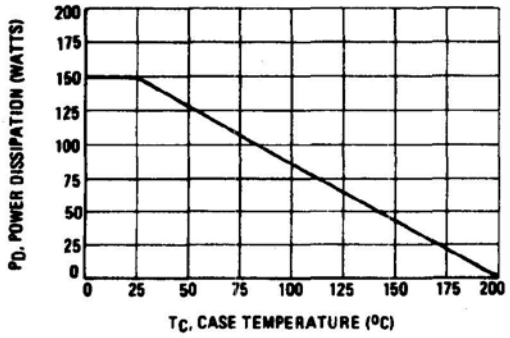

FIGURE 1 – POWER DERATING

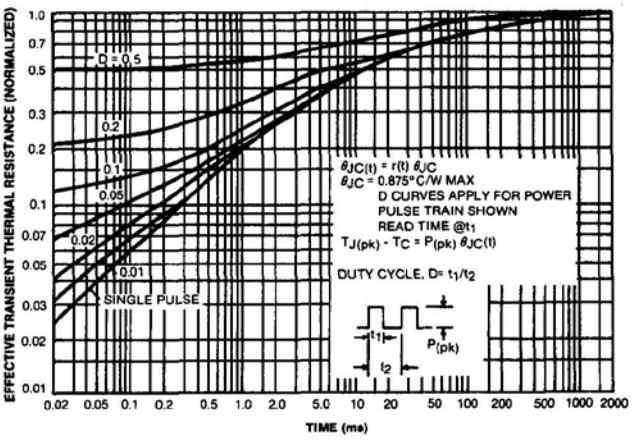

FIGURE 2- THERMAL RESPONSE

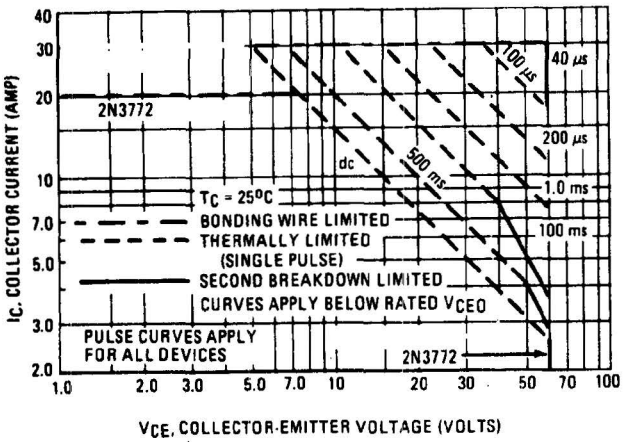

FIGURE 3 – ACTIVE-REGION SAFE OPERATING AREA

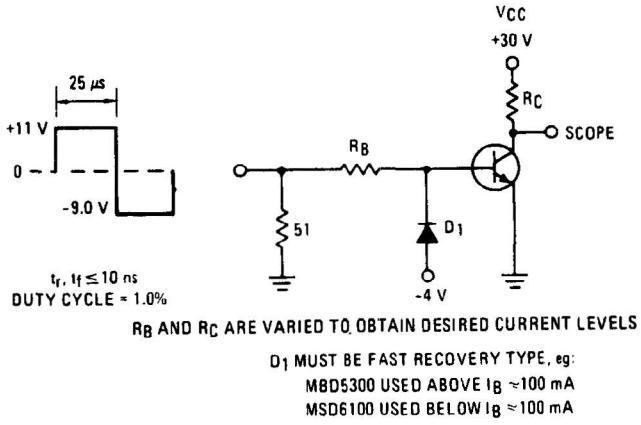

FIGURE 4 – SWITCHING TIME TEST CIRCUIT

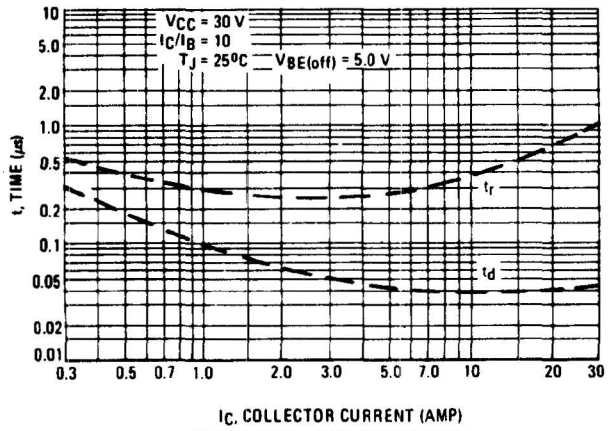

FIGURE 5 – TURN-ON TIME

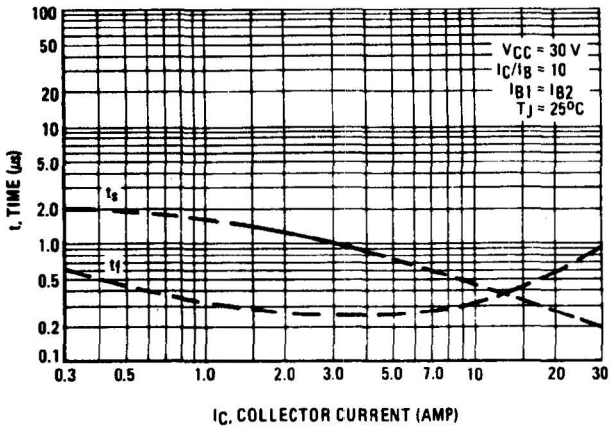

FIGURE 6 – TURN-OFF TIME

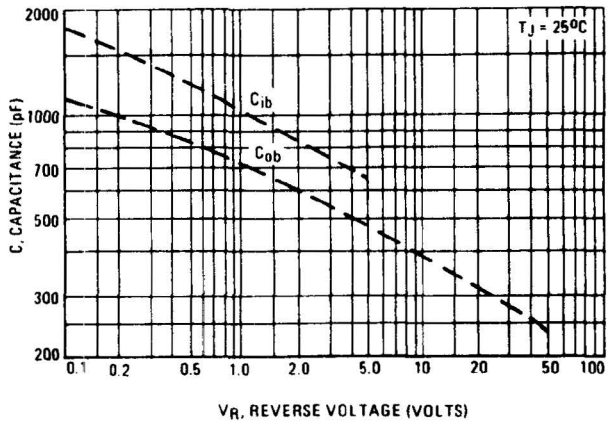

FIGURE 7 – CAPACITANCE

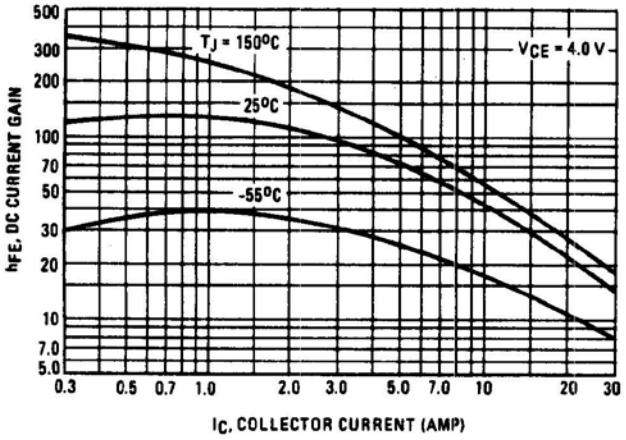

FIGURE 8 – DC CURRENT GAIN

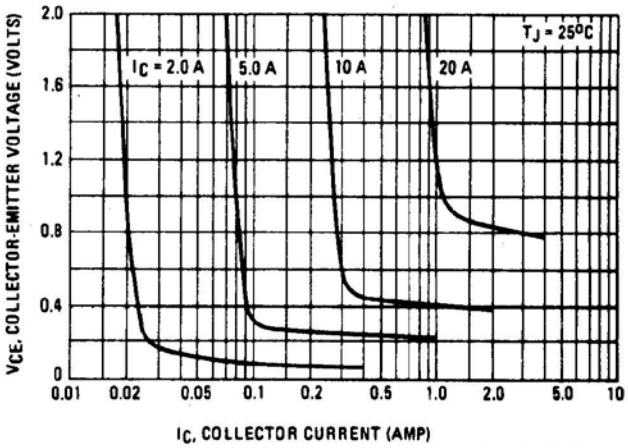

FIGURE 9 – COLLECTOR SATURATION REGION