MOTOROLA
Semiconductors
BOX 955 • PHOENIX, ARIZONA 85001

MULTIPLE DEVICES

2N2913-2N2920
2N2972-2N2979

DUAL NPN SILICON ANNULAR* TRANSISTORS

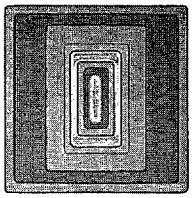

. . . especially designed for low-level, low-noise differential amplifier applications.

- High Breakdown Voltage
  BV_{CEO} = 70 Vdc typical
- Very High Beta Guaranteed from 10 μAdc to 1.0 mAdc
- Beta Match as tight as 0.9 to 1
- Base-Voltage Differential as low as
  3 mW max at I_C = 100 μAdc
- Excellent Noise Characteristics
  as low as 3.0 db max at f = 1 kc

ABSOLUTE MAXIMUM RATINGS (T_A = 25°C unless otherwise noted)

Characteristics	Symbol	Rating: 2N2913-18, 2N2972-77	Rating: 2N2919-20, 2N2978-79	Unit
Collector-Base Voltage	V_{CBO}	45	60	Vdc
Collector-Emitter Voltage	V_{CEO}	45	60	Vdc
Emitter-Base Voltage	V_{EBO}	6		Vdc
DC Collector Current	I_C	30		mAdc
Junction Temperature	T_J	+200		°C
Storage Temperature Range	T_{stg}	-65 to +200		°C
		ONE SIDE	BOTH SIDES	
Total Device Dissipation @ T_A = 25°C	P_D			
TO-5 Case		300	600	mW
Derate above 25°C		1.7	3.4	mW/°C
TO-18 Case		250	300	mW
Derate above 25°C		1.43	1.72	mW/°C
Total Device Dissipation @ T_C = 25°C	P_D			
TO-5 Case		750	1500	mW
Derate above 25°C		4.3	8.6	mW/°C
TO-18 Case		500	750	mW
Derate above 25°C		2.85	4.3	mW/°C

* Patents pending

NPN SILICON DUAL TRANSISTORS

AUGUST 1965 — DS 4522

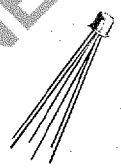

6-LEAD TO-18
2N2972 THRU 2N2979

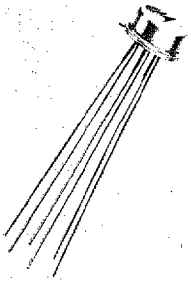

6-LEAD TO-5
2N2913 THRU 2N2920

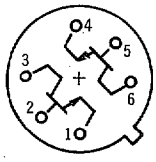

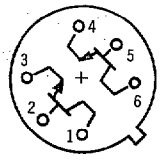

Pin Connections, Bottom View
All Leads Electrically Isolated From Case

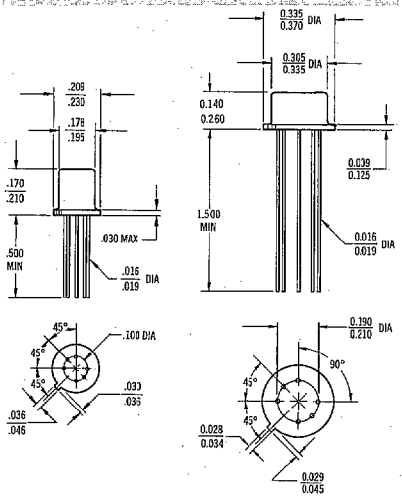

TO-18 TYPE
2N2972-79

TO-5 TYPE
2N2913-20

MOTOROLA Semiconductor Products Inc. A SUBSIDIARY OF MOTOROLA INC.

ELECTRICAL CHARACTERISTICS (At T_A = 25°C unless otherwise noted)

Characteristics		Symbol	Min	Typ	Max	Unit
Collector-Base Breakdown Voltage (I_C = 10 μAdc, I_E = 0)	2N2913 thru 2N2918, 2N2972 thru 2N2977	BV_{CBO}	45	—	—	Vdc
	2N2919, 2N2920, 2N2978, 2N2979		60	90	—	
Collector-Emitter Sustaining Voltage (I_C = 10 mAdc, I_B = 0)	2N2913, thru 2N2918, 2N2972 thru 2N2977	$BV_{CEO(sus)}$	45	—	—	Vdc
	2N2919, 2N2920, 2N2978, 2N2979		60	70	—	
Emitter-Base Breakdown Voltage (I_E = 10 μAdc, I_C = 0)	All Types	BV_{EBO}	6	7	—	Vdc
Collector-Base Cutoff Current (V_{CB} = 45 Vdc, I_E = 0)	2N2913 thru 18, 2N2972 thru 77	I_{CBO}	—	—	0.010	μAdc
	2N2919, 2N2920, 2N2978, 2N2979		—	—	0.002	
(V_{CB} = 45 Vdc, I_E = 0, T_A = 150°C)	All Types		—	—	10	
Collector-Emitter Cutoff Current (V_{CE} = 5 Vdc, I_B = 0)	All Types	I_{CEO}	—	—	0.002	μAdc
Emitter-Base Cutoff Current (V_{EB} = 5 Vdc, I_C = 0)	All Types	I_{EBO}	—	—	0.002	μAdc
Collector-Emitter Saturation Voltage (I_C = 1 mAdc, I_B = 0.1 mAdc)	All Types	$V_{CE(sat)}$	—	—	0.35	Vdc
Base-Emitter "ON" Voltage (I_C = 100 μAdc, V_{CE} = 5 Vdc)	All Types	$V_{BE(ON)}$	—	—	0.7	Vdc
DC Current Gain* (I_C = 10 μAdc, V_{CE} = 5 Vdc)	2N2913, 15, 17, 19, 2N2972, 74, 76, 78	h_{FE}	60	—	240	—
	2N2914, 16, 18, 20, 2N2973, 75, 77, 79		150	—	600	
(I_C = 10 μAdc, V_{CE} = 5 Vdc, T_A = -55°C)	2N2913, 15, 17, 19, 2N2972, 74, 76, 78		15	—	—	
	2N2914, 16, 18, 20, 2N2973, 75, 77, 79		30	—	—	
(I_C = 100 μAdc, V_{CE} = 5 Vdc)	2N2913, 15, 17, 19, 2N2972, 74, 76, 78		100	—	—	
	2N2914, 16, 18, 20, 2N2973, 75, 77, 79		225	—	—	
(I_C = 1 mAdc, V_{CE} = 5 Vdc)	2N2913, 15, 17, 19, 2N2972, 74, 76, 78		150	—	—	
	2N2914, 16, 18, 20, 2N2973, 75, 77, 79		300	—	—	
Output Capacitance (V_{CB} = 5 Vdc, I_E = 0, f = 140 kc)	All Types	C_{obo}	—	4	6	pf
High Frequency Current Gain (I_C = 500 μA, V_{CE} = 5 V, f = 20 mc)	All Types	$\|h_{fe}\|$	3.0	—	—	—
Input Impedance (I_C = 1.0 mA, V_{CB} = 5 V, f = 1 kc)	All Types	h_{ib}	25	28	32	ohms
Output Admittance (I_C = 1.0 mA, V_{CB} = 5 V, f = 1 kc)	All Types	h_{ob}	—	—	1.0	μmhos
Noise Figure (I_C = 10 μA, V_{CE} = 5 V, R_G = 10 kohms)		NF				db
f = 1 kc, BW = 200 cps	2N2914, 16, 18, 20, 73, 75, 77, 79		—	2	3	
	2N2913, 15, 17, 19, 72, 74, 76, 78		—	3	4	
f = 10 cps to 15.7 kc, BW = 10 kc	2N2914, 16, 18, 20, 73, 75, 77, 79		—	2	3	
	2N2913, 15, 17, 19, 72, 74, 76, 78		—	3	4	

MATCHING CHARACTERISTICS

DC Current Gain Ratio** (I_C = 100 μAdc, V_{CE} = 5 Vdc)	2N2917, 18, 76, 77	h_{FE1}/h_{FE2}**	0.8	—	1.0	—
	2N2915, 16, 19, 20, 74, 75, 78, 79		0.9	—	1.0	
Base Voltage Differential (I_C = 10 μA, to 1.0 mA, V_{CE} = 5 Vdc)	2N2917, 18, 76, 77	$\|V_{BE1}-V_{BE2}\|$	—	—	10	mVdc
	2N2915, 16, 19, 20, 74, 75, 78, 79		—	—	5	
(I_C = 100 μAdc, V_{CE} = 5 Vdc)	2N2917, 18, 76, 77		—	—	5	
	2N2915, 16, 19, 20, 74, 75, 78, 79,		—	—	3	
Base Voltage Differential Change (I_C = 100 μAdc, V_{CE} = 5 Vdc, T_A = -55 to +25°C)	2N2917, 18, 76, 77	$\Delta(V_{BE1}-V_{BE2})$	—	—	1.6	mVdc
	2N2915, 16, 19, 20, 74, 75, 78, 79		—	—	0.8	
(I_C = 100 μAdc, V_{CE} = 5 Vdc, T_A = 25 to 125°C)	2N2917, 18, 76, 77		—	—	2.0	
	2N2915, 16, 19, 20, 74, 75, 78, 79		—	—	1.0	

* Pulse Test ≤ 300 μsec, duty cycle ≤ 2%

**The lowest h_{FE} reading is taken as h_{FE1} for this ratio

MOTOROLA Semiconductor Products Inc.
BOX 955 • PHOENIX, ARIZONA 85001 • A SUBSIDIARY OF MOTOROLA INC.
PRINTED IN USA 8-65 IMPERIAL LITHO 7544
DS 4522