THIS DRAWING IS UNPUBLISHED.
DIFFUSION RESTREINTE

RELEASED FOR PUBLICATION
LIBRE A LA DIFFUSION

© COPYRIGHT
ALL RIGHTS RESERVED.
TOUS DROITS RESERVES

LOC	DIST
F	7

REVISIONS

P	LTR	DESCRIPTION MODIFICATIONS	DATE	DWN DESS.	APVD APP.
	G1	REVISED PER ECO-11-005150	19APR11	RK	HMR

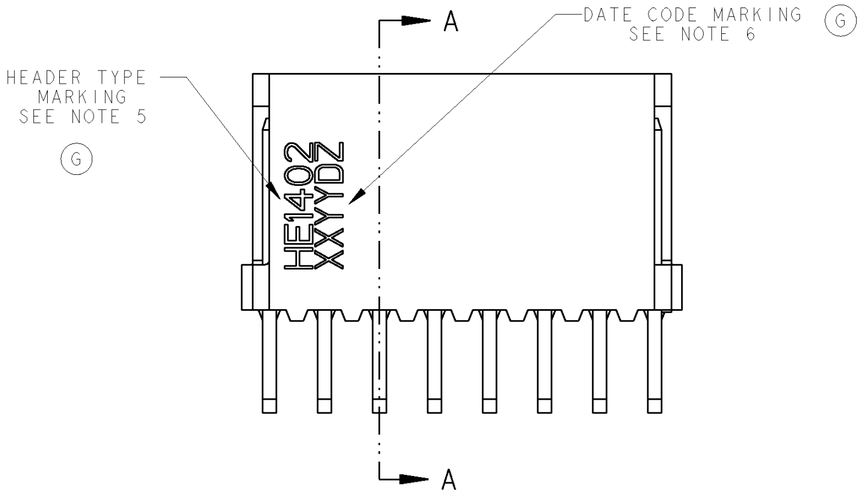

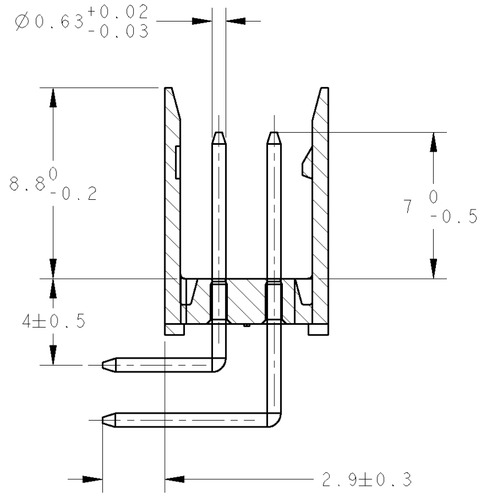

SECTION A-A

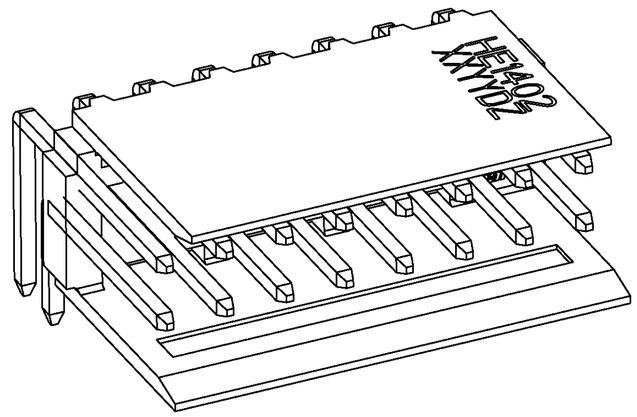

SCALE 6:1

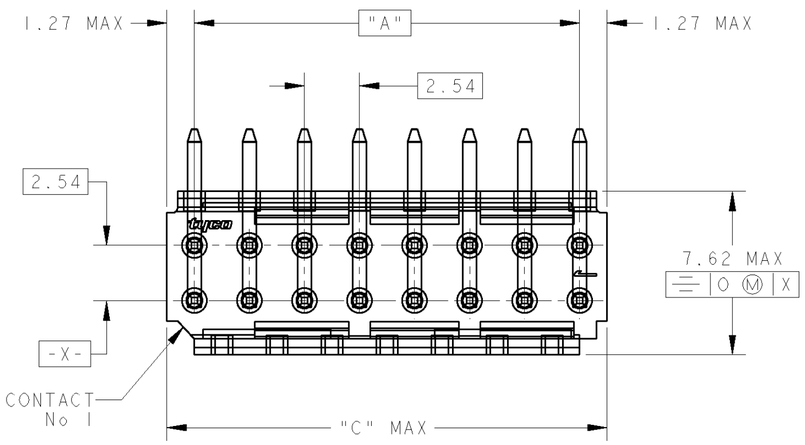

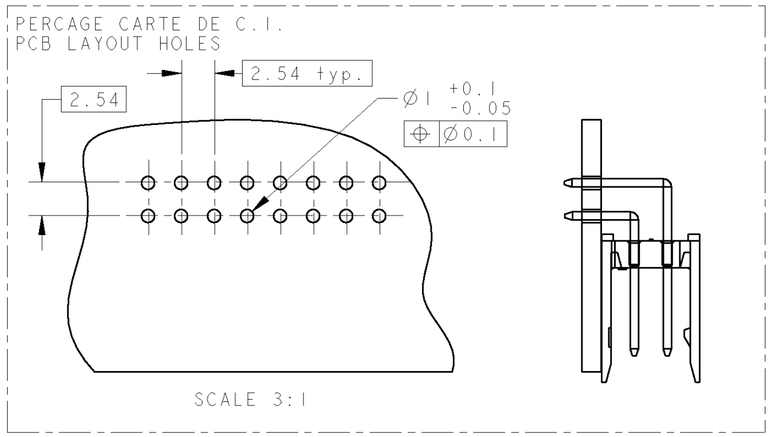

C	A	Nb DE POS	PART NUMBER
50.80	48.26	2x 20	2-281742-0
45.72	43.18	2x 18	1-281742-8 *
43.18	40.64	2x 17	1-281742-7
38.10	35.56	2x 15	1-281742-5 *
33.02	30.48	2x 13	1-281742-3
30.48	27.94	2x 12	1-281742-2 *
25.40	22.86	2x 10	1-281742-0 *
20.32	17.78	2x 8	0-281742-8 *
15.24	12.70	2x 6	0-281742-6 *
12.70	10.16	2x 5	0-281742-5 *
10.16	7.62	2x 4	0-281742-4 *
7.62	5.08	2x 3	0-281742-3 *
5.08	2.54	2x 2	0-281742-2

DIMENSIONS

NOTES:

1. CES EMBASES SONT PREVUES POUR ETRE ACCOUPLEES AVEC LES FICHES "HE1402" SIMPLE RANGEE.
   (These headers are designed to be mated with "HE1402" connectors single row)

2. LES REFERENCES SUIVIES D'UN * SONT LES VERSIONS NORMALISEES SELON LA NORME CEI 603-8
   (The parts numbers followed by * are covered by the international standard IEC 603-8

3. REVETEMENT DES CONTACTS: ETAIN PUR SUR NICKEL
   (Contacts plating: lead free tin over nickel)

4. MATIERE PLASTIQUE: TERMO-PLASTIQUE HAUTE TEMPERATURE, UL-94V0, COULEUR BLEUE
   (Plastic material: High temperature thermoplastic, UL-94V0, Blue color
   MATIERE DES CONTACTS: BRONZE PHOSPHOREUX
   (Contacts material: phosphor bronze)

5. MARQUAGE DU TYPE D'EMBASE (HE1402) A L'ENCRE NOIRE
   (header type marking (HE1402) with black ink)

6. MARQUAGE DE LA DATE A L'ENCRE NOIRE :
   (date code marking with black ink)

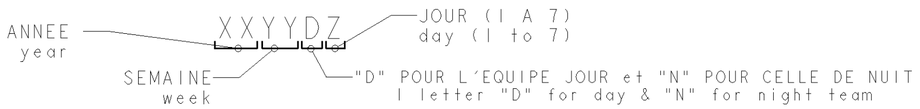

DIMENSIONS: mm

TOLERANCES UNLESS OTHERWISE SPECIFIED:
TOLERANCES NON SPECIFIEES (SUIV NB DE DECIMALES)
0 PLC/DEC: ±-
1 PLC/DEC: ±0.3
2 PLC/DEC: ±0.13
3 PLC/DEC: ±0.013
4 PLC/DEC: ±0.0001
ANGLES: ±5°

MATERIAL/MATIERE: 4 -

FINISH/FINITION: 3 -

DWN/DESSINE 22NOV2000 C. COMBEDOUZON
CHK/VERIFIE 22NOV2000 T. CORRIOU
APVD/APROUVE 22NOV2000 Y PETRONIN

PRODUCT SPEC
SPEC. PRODUIT 108-15053

APPLICATION SPEC
SPEC. APPLICATION -

WEIGHT
MASSE APPROX. -

TE Connectivity

NAME
TITRE
HEADERS HE14,
DOUBLE ROW, RIGHT ANGLE
-

SIZE FORMAT A2 | CAGE CODE 00779 | DRAWING NO No PLAN C-281742 | RESTRICTED TO RESERVE A -

CUSTOMER DRAWING /PLAN CLIENT UNIQUEMENT POUR REFERENCE | SCALE ECHELLE 5:1 | SHEET FEUILLE 1 OF DE 1 | REV G1