DO NOT SCALE	METRIC	THIRD ANGLE PROJECTION
DIMENSIONS IN mm		

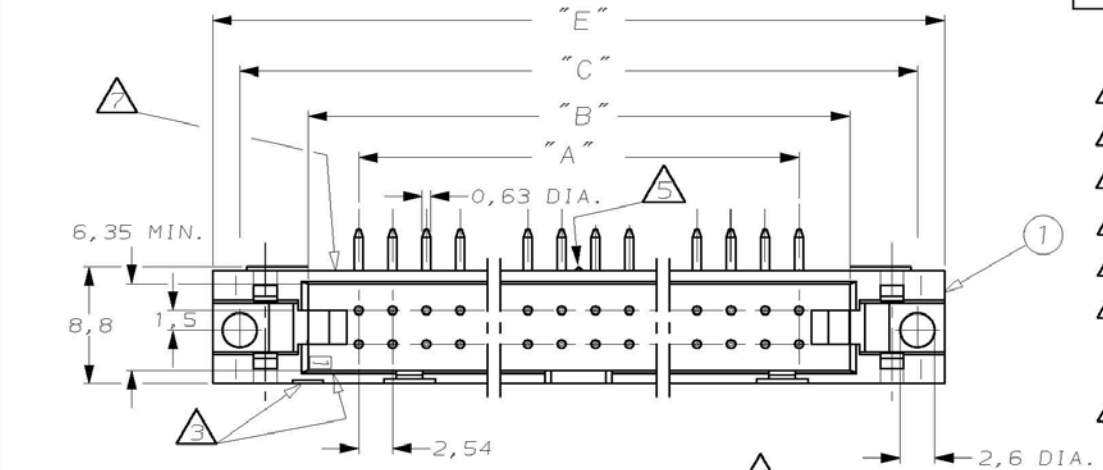

NOTES

1. SNAP-IN POLARIZERS PN. 927636-2 OR 927637-2 CAN BE APPLIED.
2. THERE IS NO WINDOW FOR SNAP-IN POLARIZERS AT THIS END IN 10 AND 14 POS. HEADERS.
3. INDICATION OF FIRST POSITION.
4. SNAP-IN CONNECTOR "LATCH / EJECTOR" PN. 927176-2 OR 927215-2 CAN BE APPLIED.
5. THERE IS NO CENTER STAND-OFF IN 10-26 POS. HEADERS.
6. DIMENSION WITH EJECTOR : PN. 927176-2 H= 23 MM, PN. 927215-2 H= 27,3 MM.
   H1= 20,2 MM H1= 24 MM
   H2= 6 MM H2= 7 MM
7. PARTNUMBER AND PROD.- DATE ON SUITABLE SURFACE X-828 581-X DD.MM.YY

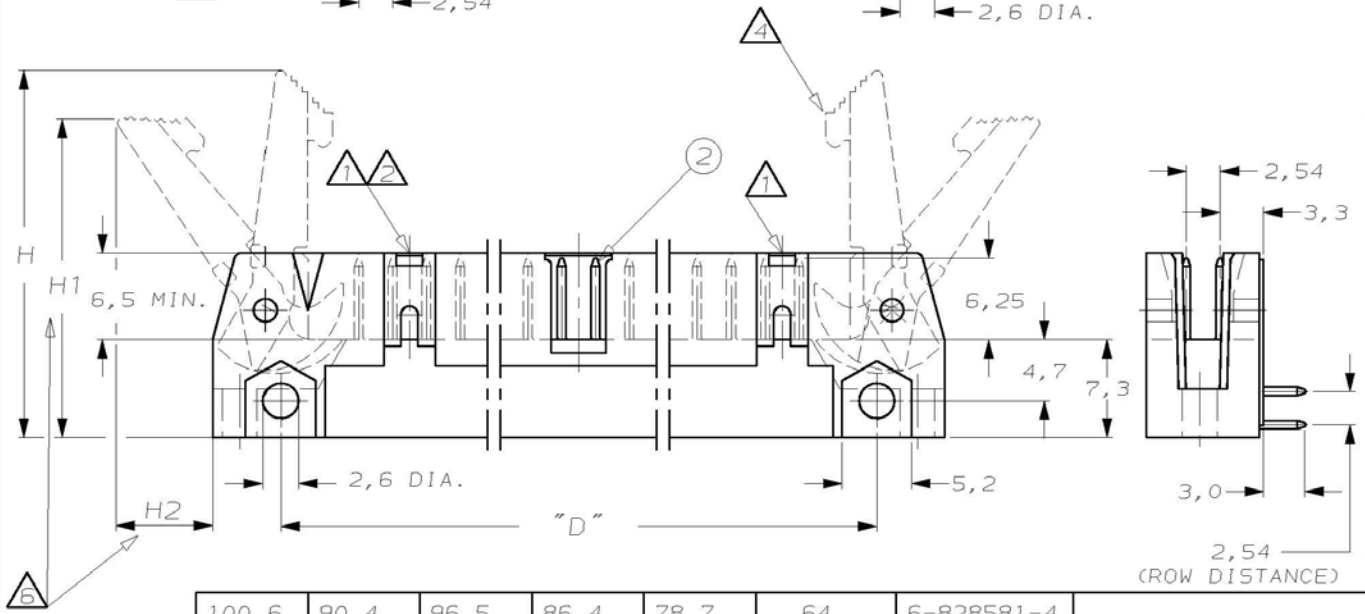

RECOMMENDED PCB-HOLE PATTERN

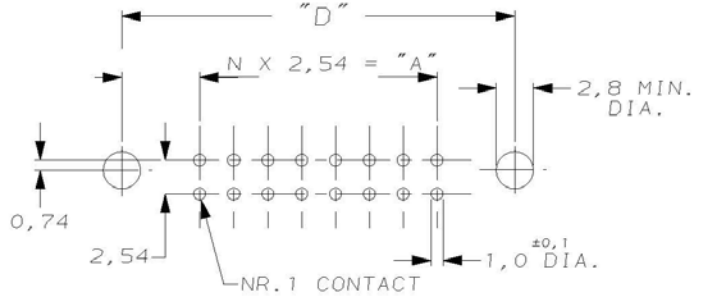

2	PIN-CONTACT	BRASS	MATING SIDE: 0,8µm AU OR 0,8µm AMP DURAGOLD®/ OVER 1,27µm NI SOLDER SIDE: MIN. 3,0µm SN OVER 1,27µm NI
1	HOUSING	GLASSFILLED POLYESTER	GREY
		COMPONENT NAME	MATERIAL	PLATING/COLOUR

DIM."E"	DIM."D"	DIM."C"	DIM."B"	DIM."A"	NR. OF POSITIONS	PARTNUMBER
100,6	90,4	96,5	86,4	78,7	64	6-828581-4
95,5	85,3	91,4	81,3	73,7	60	6-828581-0
82,8	72,6	78,7	68,6	61,0	50	5-828581-0
70,1	59,9	66,0	55,9	48,3	40	4-828581-0
62,5	52,3	58,4	48,3	40,6	34	3-828581-4
52,3	42,2	48,3	38,1	30,5	26	2-828581-6
44,7	34,5	40,6	30,5	22,9	20	2-828581-0
39,6	29,5	35,6	25,4	17,8	16	1-828581-6
37,1	26,9	33,0	22,9	15,2	14	1-828581-4
32,0	21,8	27,9	17,8	10,2	10	1-828581-0

VARIABLE CONNECTOR DIMENSIONS

LTR.	REVISION RECORD	DR.	CHK.	DATE
—	—	-	-	-
—	—	-	-	-
—	—	-	-	-
—	—	-	-	-
A1	PLATING DURAGOLD OR GOLD ALTERNATIVELY USABLE	MAH.	STRE.	27-JUN-03
A	BEMERKUNGEN 5 U. 7 ERGAENZT	BLU	LAU	10.05.95
0	EH-0839-93	JvL	RV	29-11-93

DR.: J.v.LIEMPT DATE: 29-11-93 | CHK.: R. VERSTIJNEN DATE: - | APP.: L.v.SOEST DATE: -

CUSTOMER DRAWING — FOR REFERENCE ONLY WILL NOT BE UPDATED

© COPYRIGHT 19- BY AMP-HOLLAND B.V.
ALL INTERNATIONAL RIGHTS RESERVED. AMP PRODUCTS MAY BE COVERED BY U.S. AND FOREIGN AND/OR PATENTS PENDING.

~~THIS DRAWING IS UNPUBLISHED~~
RELEASED FOR PUBLICATION - ,19 -

AMP — AMP-HOLLAND B.V. 's-Hertogenbosch, The Netherlands.

NAME: AMP-LATCH HEADER 90 DEG. VERSION

DWG.No.	LOC.		SHEET	REV.LTR.
C-828581	A1	A3	1 OF 1	A1