THIS DRAWING IS UNPUBLISHED. RELEASED FOR PUBLICATION ON 26-FEB-2010 REVISION A
© COPYRIGHT 2010 BY TYCO ELECTRONICS CORPORATION. ALL RIGHTS RESERVED

FILS ADMISSIBLES (ACCEPTABLES W RES)	
JAUGE (AWG) SECTION / 7 BRINS (7 STRANDS)	28-26 0.08-0.12mm²
SOLANT: ØMAX / MATIERE (INSUL.: Ø MAX / MATIEL)	Ø1/ PVC

LOC	DIST
1	/

REVISIONS

P	LTR	DESCRIPTION MODIFICATIONS	DATE	DWN. CHECK.	APPD AMP
	A	REDESSINE	26FEB	AC	-
	B	REDESSINE SUR CHEDRAWING OXI PROFENS	05SEP2002	CC	MP
	C	UPDATED	29MAR2007	TC	MP

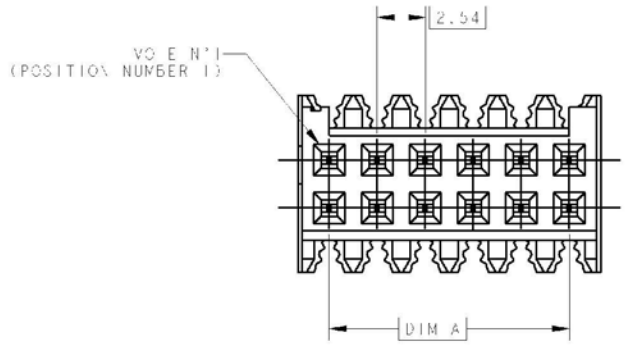

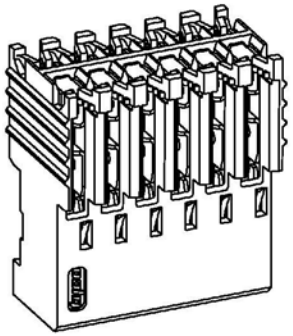

ECHELLE 4:1
SCALE

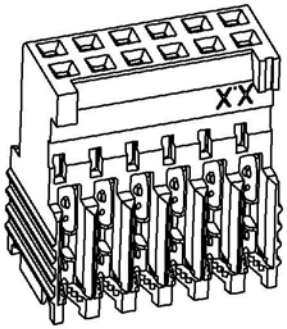

ECHELLE 4:1
SCALE

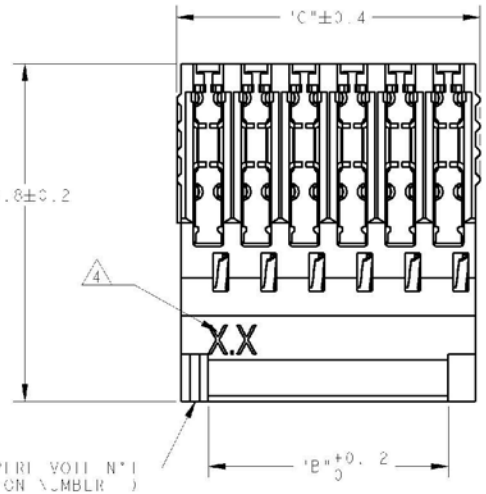

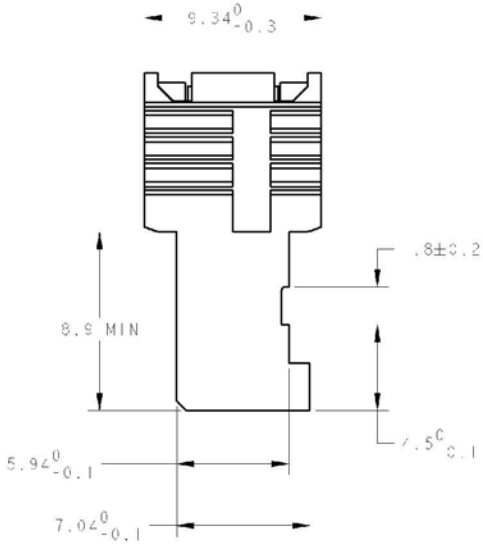

46.52	43.18	2x 8	1-281792-8 *
38.90	35.56	2x 5	1-281792-5 *
31.28	27.94	2x 2	1-281792-2 *
26.20	22.86	2x 0	1 281792 0 *
21.12	17.78	2x 8	0-281792-8 *
16.04	12.70	2x 6	0-281792-6 *
13.50	10.16	2x 5	0-281792-5 *
10.96	7.62	2x 4	0-281792-4 *
8.42	5.08	2x 3	0 281792 3 *
5.88	2.54	2x 2	0 281792 2
"C"	"A,B" DIMENSIONS	Nb DE POS.	8 TRINCIS (PART N°)

CES CONNECTEURS SONT PREVUS POUR ETRE ACCOUPLES AVEC LES EMBASES 'HE1402' DOUBLE RANGEE

(THESE CONNECTORS ARE DESIGNED TO BE MATED WITH 'HE 402' HEADERS DOUBLE ROW)

2 LES REFERENCES SUIVIES D'UN '*' SONT LISTEES DANS NORMA 1511 SELON LA 'CEI 603-8'

(THE PART-No FOLLOWED BY '*' ARE COVERED BY THE INTERNATIONAL STANDARD 'IEC603 8')

3 REVETEMENT DES CONTACTS: AM

(CONTACTS PLATING: TIN)

4 'X.X' EST REMPLACE PAR LES DEUX DEUXIEME CHIFFRES DU COUPLE DES JAUGES AWG

('X.X' REPLACED BY THE TWO SECOND DIGIT OF AWG RANGE AS DEFINED IN TABLE)

5 MATIERES - BOITIER: PBT UL94V0 - CONTACTS: BRONZE PHOSPHOREUX.

(MATERIAL - HOUSING : PBT UL94V0 - CONTACTS: PHOSPHOR BRONZE)

DIMENSIONS: mm	TOLERANCES UNLESS OTHERWISE SPECIFIED: TOLERANCES NON SPECIFIEES LIMITE No D- CRITERIA KS1 C PLACE ± 1 PLACE ±0.3 2 PLACE ± 3 PLACE ± 4 PLACE ± ANGLES ±5°
MATERIAL/MAT - 5	FINISH/FINITION 3

DWN/DESSIN 29NOV2000 C COMBEDOUZOUX
CHK/VERIFIE 29NOV2000 T. CORRIGU
APPR/APPROUV 29NOV2000 Y. PIRONTIN
PRODUCT SPEC SPEC. PRODUIT 108-15053
APPLICATION SPEC SPEC. APPLICATION 114-1503
WEIGHT MASSE APPROX.

AMP
AMP DE FRANCE
95330 PONTOISE

NAME/TITRE: HE 1402 PLUG, 180° IDC DOUBLE ROW

SIZE FORMAT A2 | CAGE CODE | DRAWING NO No PLAN 00779 C 281792 | RESTRICTED TO RESERVE A

CUSTOMER DRAWING (PLAN CLIENT) | DEGAGEMENT POUR REFERENCE | SCALE ECHELLE 1:1 | SHEET FEUILLE 1 OF 1 | REV C